LEFT VIEW

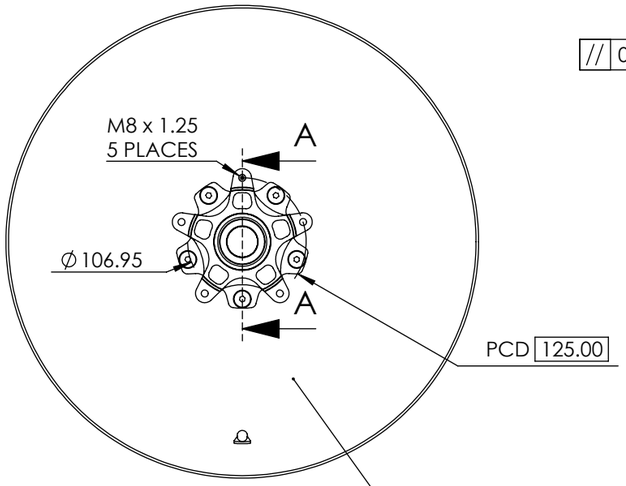

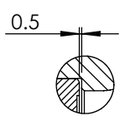

DETAIL B
SCALE 2 : 2.5

LEFT

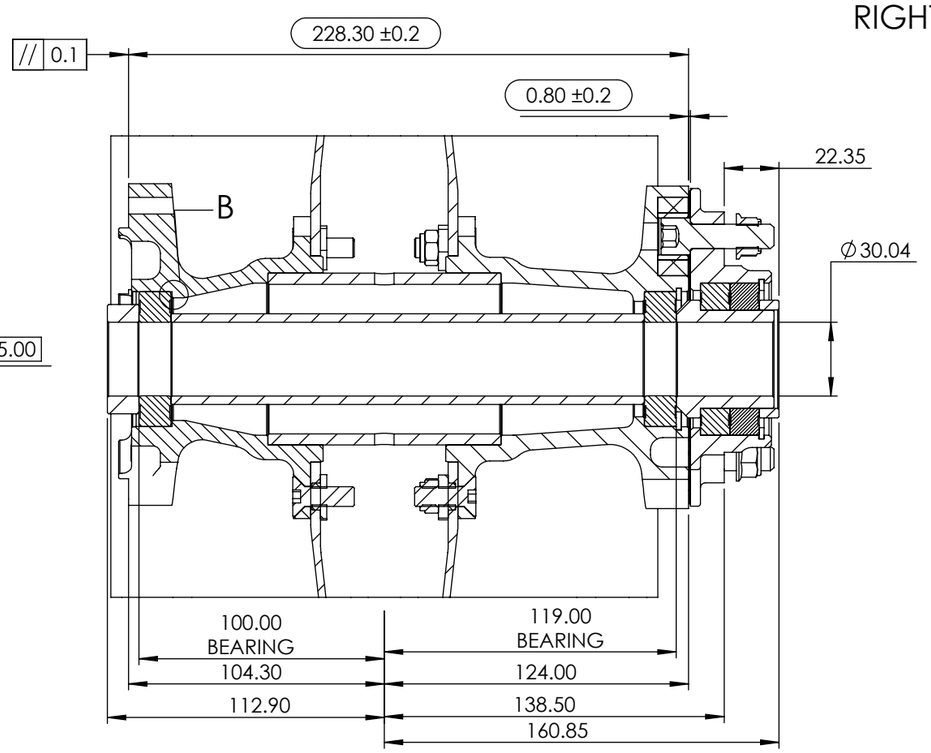

A-A

RIGHT

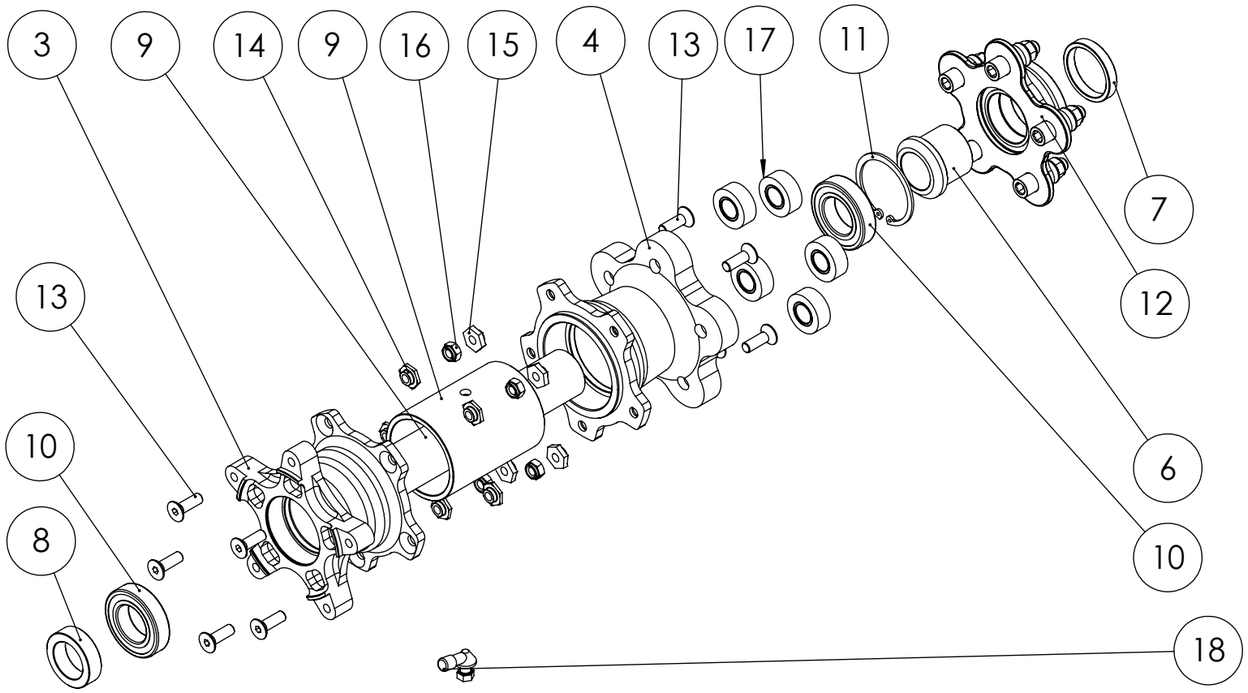

LEFT

ZONE	REV	DESCRIPTION	APPROVAL
	A	New Design	ICN:
			DAS:517

PLEASE NOTE !!

PAINT THESE RIMS WITH MATT PAINT

ASSEMBLE THE BRAKE ON THE VALVE SIDE OF THE WHEEL

ITEM	QTY.	DESCRIPTION	PART / DWG NO.
1	1	8027 CRW 17 x 8	8027-17-000-A
2	1	Confederate 18 x 8 CRW Brake Adaptor	17006-8000-19-000-A
3	1	Confederate 18 x 8 CRW Cush Adaptor	17006-8000-19-001-A
4	1	Confederate 18 x 8 CRW Inner Spacer	17006-8000-19-002-A
5	1	Confederate 18 x 8 CRW Inner Sprocket spacer	17006-8000-19-003-A
6	1	Confederate 18 x 8 CRW Outer Sprocket spacer	17006-8000-19-004-A
7	1	Confederate 18 x 8 CRW Brake spacer	17006-8000-19-005-A
8	1	Hellcat CRW Outer Spacer ver B	17002-8000-19-004-B
9	2	SKF 6006 2RS1_C3 30 x 55 x 13	51102
10	1	Dia 55 Circlip Std Housing	50303
11	1	CRW Dia 40 Sprocket Carrier Assy	40000-8000-11-002
	1	CRW Sprocket Carrier	40000-8000-19-003
	2	SKF 61908 2RS1_C3 40 x 62 x 12	51108
	1	Dia 62 Circlip Std Housing	50304
	5	CRW Long Drive Pin	40000-8000-19-014
	1	CRW Cush Drive Shim	40000-8000-19-002-B
	5	CRW Lock Nut	50204
12	10	M8 x 25 CSK Cap Screw HT	50110
13	5	Generic M8 Hexagon Insert	40000-19-003-B
14	5	Generic M8 Hexagon Insert Ver C	40000-19-003-C
15	5	M8 clevelock nut	50206
16	5	CRW Cush rubber1	40000-8000-19-008
17	1	VALVE, ALUMI TL 6207 90 B1045	51003

STANDARDS UNLESS OTHERWISE STATED:
BS 8888

TOLERANCE UNLESS OTHERWISE STATED:

TWO DECIMALS	±0,1
ONE DECIMAL	±0,2
NO DECIMAL	±0,5
ANGLE	±0,5

A3

ALL INFORMATION CONTAINED ON THIS DRAWING IS THE PROPERTY OF BLACKSTONE TEK AND MAY NOT BE DIVULGED TO ANY THIRD PARTY IN ANY FORM WHATSOEVER WITHOUT THE EXPRESS WRITTEN AUTHORIZATION OF BLACKSTONE TEK

APPROVALS

	DATE
DRAWN DSH	13/12/2013
CHECKED JHH	13/12/2013
ENGINEER SCD	13/12/2013
APPROVED CG	13/12/2013

BST blackstone TEK
PO BOX 1211
PARKLANDS
2121
TEL : +27 11 704 0026
FAX: +27 11 704 0031

DESCRIPTION
Confederate 17 x 8 CRW Assembly

DRAWING NO:
17006-8000-16-000-A

USED ON :

SHT 1