ZONE	REV	DESCRIPTION	APPROVAL
	A	New Design	DAS: 870

LEFT

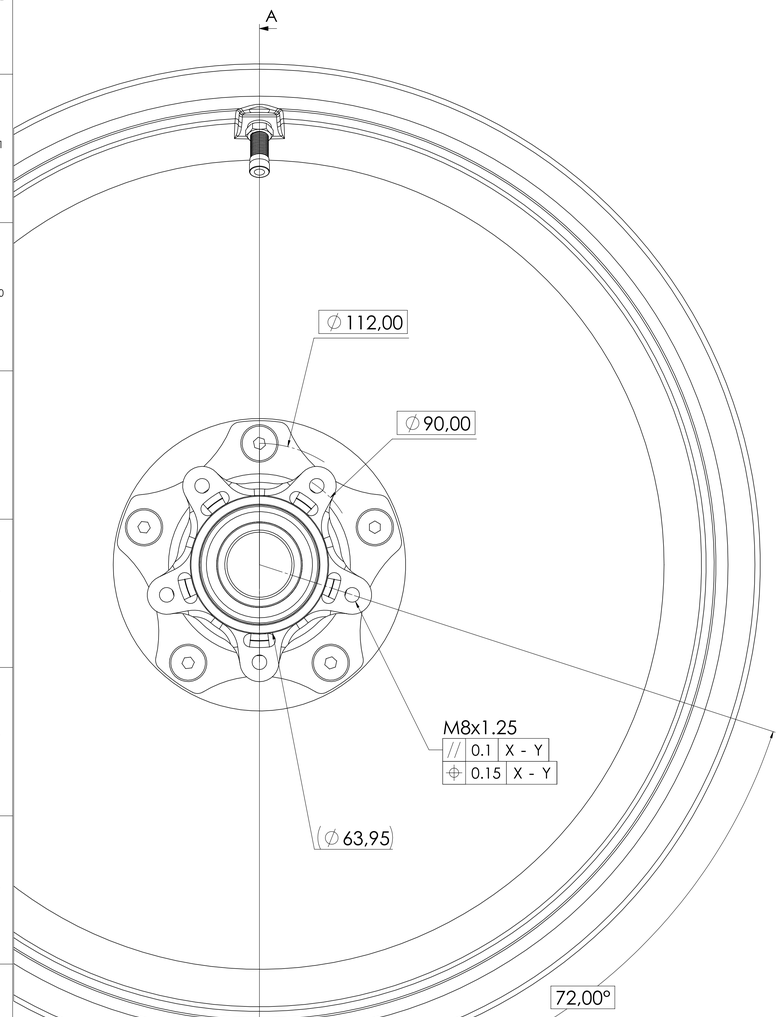

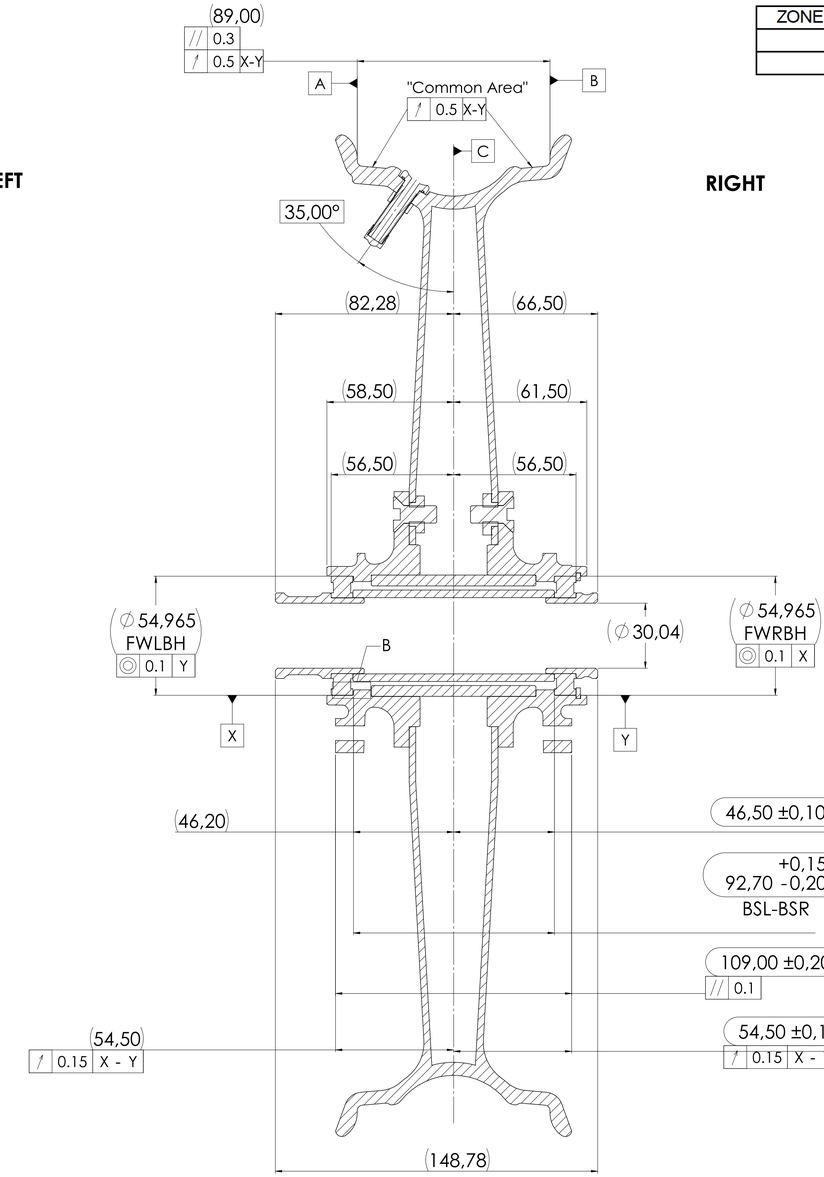

SECTION A-A

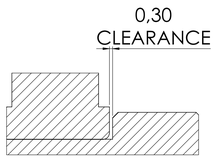

DETAIL B
SCALE 5 : 1

RIGHT

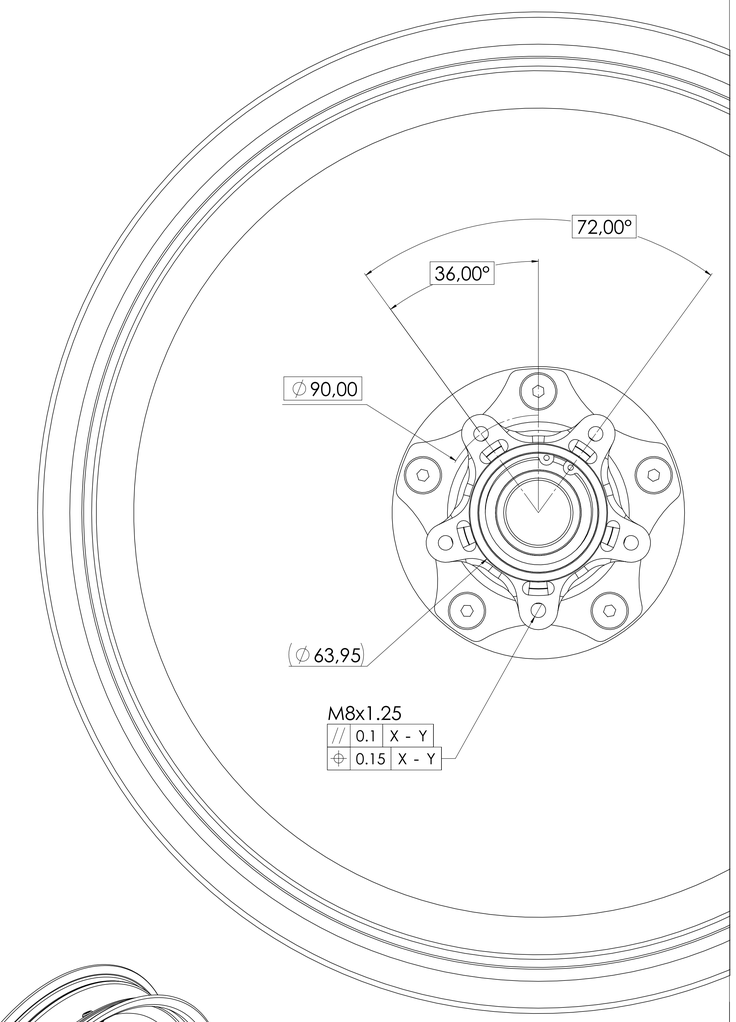

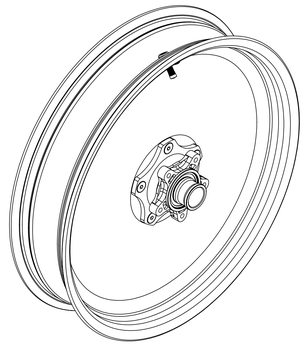

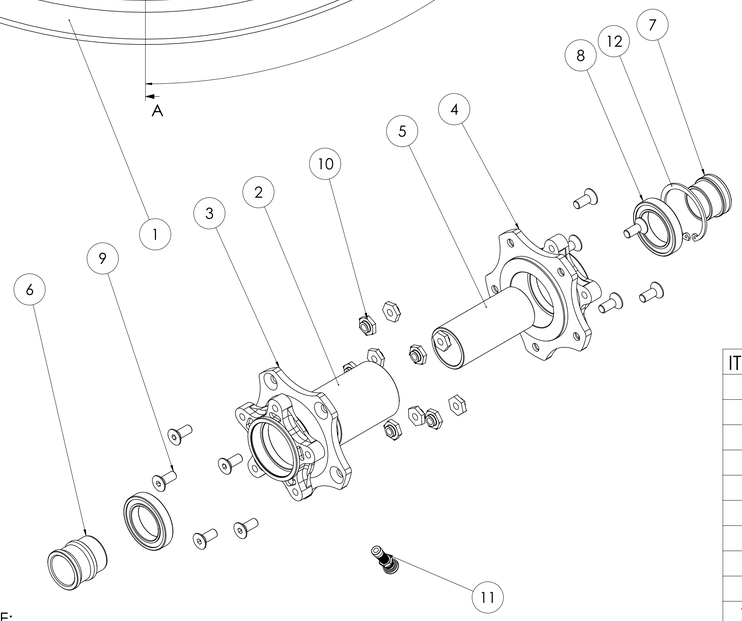

LEGEND:
FWLBH - Front Wheel Left Bearing Housing
FWRBH - Front Wheel Right Bearing Housing
BSL - BSR - Bearing Seat Left to Bearing Seat Right

COORDINATE SYSTEM:
List and define all planes and points in the coordinate system
- Plane C - Mid plane of plane A and plane B

PLEASE NOTE:
1. For each part, the sizes that are circled must be inspected and inspection reports supplied with the measured sizes matched to the abovementioned number.
2. Notify engineering if any inspected dimensions are out of tolerance.

ITEM	QTY.	DESCRIPTION	PART / DWG NO.
1	1	7037 17x3.5 Solid Disc Wheel Rev C	7026-17-000-A
2	1	FW Outer Spacer Dia56x76L	40000-7000-19-005
3	1	Confederate Solid Disc FWL Brake Adaptor	17009-7000-19-000-A
4	1	Confederate Solid Disc FWR Brake Adaptor	17009-7000-19-001-A
5	1	Confederate 17 x 3.5 FW Inner Spacer	17005-7000-19-002-A
6	1	Confederate P51 Fighter FWL Spacer	17008-7000-19-003-A
7	1	Confederate 17 x 3.5 FWR Spacer	17005-7000-19-004-A
8	2	NSK 6907 35 x 55 x 10	51104
9	10	M8 x 20 CSK Cap Screw HT	50122
10	10	Generic M8 Hexagon Insert Ver C	40000-19-003-C
11	1	VALVE, ALUMI TL MCYCLE 6206 B1040	51004
12	1	Dia 55 Circlip Std Housing	50303

DRAWING STANDARDS UNLESS OTHERWISE STATED:
BS 8888

TOLERANCE/GENERAL STANDARDS:
DIN ISO 2768

Scale **1:1** **A0**

ALL INFORMATION CONTAINED ON THIS DRAWING IS THE PROPERTY OF BLACKSTONE TEK AND MAY NOT BE DIVULGED TO ANY THIRD PARTY IN ANY FORM WHATSOEVER WITHOUT THE EXPRESS WRITTEN AUTHORIZATION OF BLACKSTONE TEK

TUBLESS TYRE
RIM CONTOUR MEETS ETRTO
STATIC IMBALANCE: MAX 30g

APPROVALS		DATE
DRAWN	JAB	09/04/2018
ENGINEER	BJH	09/04/2018
APPROVED	FAA	09/04/2018

PO BOX 1211
PARKLANDS
2121
TEL : +27 11 704 0026
FAX: +27 11 704 0031

DESCRIPTION
Confederate Solid Disc FW Assembly

DRAWING NO:
17009-7000-16-000-A

RIM SIZE : 17" M/C x MT3.5"

SHT 1