Ninja H2

Motorcycle
Service Manual



Kawasaki

Quick Reference Guide

General Information	1
Periodic Maintenance	2
Fuel System (DFI)	3
Cooling System	4
Engine Top End	5
Clutch	6
Engine Lubrication System	7
Engine Removal/Installation	8
Crankshaft/Transmission	9
Wheels/Tires	10
Final Drive	11
Brakes	12
Suspension	13
Steering	14
Frame	15
Electrical System	16
Self-Diagnosis System	17
Appendix	18

This quick reference guide will assist you in locating a desired topic or procedure.

- Bend the pages back to match the black tab of the desired chapter number with the black tab on the edge at each table of contents page.
- Refer to the sectional table of contents for the exact pages to locate the specific topic required.

Kawasaki

Ninja H2

Motorcycle Service Manual

All rights reserved. No parts of this publication may be reproduced, stored in a retrieval system, or transmitted in any form or by any means, electronic mechanical photocopying, recording or otherwise, without the prior written permission of Quality Assurance Division/Motorcycle & Engine Company/Kawasaki Heavy Industries, Ltd., Japan.

No liability can be accepted for any inaccuracies or omissions in this publication, although every possible care has been taken to make it as complete and accurate as possible.

The right is reserved to make changes at any time without prior notice and without incurring an obligation to make such changes to products manufactured previously. See your Motorcycle dealer for the latest information on product improvements incorporated after this publication.

All information contained in this publication is based on the latest product information available at the time of publication. Illustrations and photographs in this publication are intended for reference use only and may not depict actual model component parts.

© 2016 Kawasaki Heavy Industries, Ltd. First Edition (1) : Oct. 17, 2016

LIST OF ABBREVIATIONS

A	ampere(s)	KIBS	Kawasaki intelligent antilock brake system
ABDC	after bottom dead center	KLCM	Kawasaki launch control mode
ABS	antilock brake system	km/h	kilometers per hour
AC	alternating current	KTRC	Kawasaki traction control
Ah	ampere hour	KQS	Kawasaki quick shift
ATDC	after top dead center	L	liter(s)
BBDC	before bottom dead center	LCD	liquid crystal display
BDC	bottom dead center	LED	light emitting diode
BTDC	before top dead center	lb	pound(s)
°C	degree(s) Celsius	m	meter(s)
CAN	controller area network		
cmHg	centimeters of mercury	min	minute(s)
cu in.	cubic inch(es)	mmHg	millimeters of mercury
DC	direct current	mph	miles per hour
DFI	digital fuel injection	N	newton(s)
DOHC	double overhead camshaft	oz	ounce(s)
DOT	department of transportation	Pa	pascal(s)
ECU	electronic control unit	PS	horsepower
ESD	electronic steering damper	psi	pound(s) per square inch
F	farad(s)	qt	quart(s)
°F	degree(s) Fahrenheit	r	revolution
ft	foot, feet	rpm	revolution(s) per minute
g	gram(s)	s	second(s)
gal	gallon(s)	TDC	top dead center
h	hour(s)	TIR	total indicator reading
HP	horsepower(s)	V	volt(s)
IC	integrated circuit	W	watt(s)
in.	inch(es)	Ω	ohm(s)
KEBC	Kawasaki engine brake control		

COUNTRY AND AREA CODES

AT	Austria	ID	Indonesia
AU	Australia	MY	Malaysia
BR	Brazil	PH	Philippines
CA	Canada	SEA-B1	Southeast Asia B1
CAL	California	SEA-B3	Southeast Asia B3
CH	Switzerland	TH	Thailand
CN	China	US	United States
DE	Germany	WVTA (FULL)	WVTA Model (Full Power)

EMISSION CONTROL INFORMATION

To protect the environment in which we all live, Kawasaki has incorporated crankcase emission (1) and exhaust emission (2) control systems in compliance with applicable regulations of the United States Environmental Protection Agency and California Air Resources Board. Additionally, Kawasaki has incorporated an evaporative emission control system (3) in compliance with applicable regulations of the California Air Resources Board on vehicles sold in California only.

1. Crankcase Emission Control System

This system eliminates the release of crankcase vapors into the atmosphere. Instead, the vapors are routed through an oil separator to the intake side of the engine. While the engine is operating, the vapors are drawn into combustion chamber, where they are burned along with the fuel and air supplied by the fuel injection system.

2. Exhaust Emission Control System

This system reduces the amount of pollutants discharged into the atmosphere by the exhaust of this motorcycle. The fuel, ignition, and exhaust systems of this motorcycle have been carefully designed and constructed to ensure an efficient engine with low exhaust pollutant levels.

The exhaust system of this model motorcycle manufactured primarily for sale in California includes a catalytic converter system.

3. Evaporative Emission Control System

Vapors caused by fuel evaporation in the fuel system are not vented into the atmosphere. Instead, fuel vapors are routed into the running engine to be burned, or stored in a canister when the engine is stopped.

The Clean Air Act, which is the Federal law covering motor vehicle pollution, contains what is commonly referred to as the Act's "tampering provisions".

"Sec. 203(a) The following acts and the causing thereof are prohibited.

(3)(A) for any person to remove or render inoperative any device or element of design installed on or in a motor vehicle or motor vehicle engine in compliance with regulations under this title prior to its sale and delivery to the ultimate purchaser, or for any manufacturer or dealer knowingly to remove or render inoperative any such device or element of design after such sale and delivery to the ultimate purchaser.

(3)(B) for any person engaged in the business of repairing, servicing, selling, leasing, or trading motor vehicles or motor vehicle engines, or who operates a fleet of motor vehicles knowingly to remove or render inoperative any device or element of design installed on or in a motor vehicle or motor vehicle engine in compliance with regulations under this title following its sale and delivery to the ultimate purchaser..."

NOTE

○ *The phrase "remove or render inoperative any device or element of design" has been generally interpreted as follows.*

1. *Tampering does not include the temporary removal or rendering inoperative of devices or elements of design in order to perform maintenance.*
2. *Tampering could include.*
   - *a. Maladjustment of vehicle components such that the emission standards are exceeded.*
   - *b. Use of replacement parts or accessories which adversely affect the performance or durability of the motorcycle.*
   - *c. Addition of components or accessories that result in the vehicle exceeding the standards.*
   - *d. Permanently removing, disconnecting, or rendering inoperative any component or element of design of the emission control systems.*

WE RECOMMEND THAT ALL DEALERS OBSERVE THESE PROVISIONS OF FEDERAL LAW, THE VIOLATION OF WHICH IS PUNISHABLE BY CIVIL PENALTIES NOT EXCEEDING $10 000 PER VIOLATION.

TAMPERING WITH NOISE CONTROL SYSTEM PROHIBITED

Federal law prohibits the following acts or the causing thereof. (1) The removal or rendering inoperative by any person other than for purposes of maintenance, repair, or replacement, of any device or element of design incorporated into any new vehicle for the purpose of noise control prior to its sale or delivery to the ultimate purchaser or while it is in use, or (2) the use of the vehicle after such device or element of design has been removed or rendered inoperative by any person.

Among those acts presumed to constitute tampering are the acts listed below.

- Replacement of the original exhaust system or muffler with a component not in compliance with Federal regulations.
- Removal of the muffler(s) or any internal portion of the muffler(s).
- Removal of the air box or air box cover.
- Modifications to the muffler(s) or air intake system by cutting, drilling, or other means if such modifications result in increased noise levels.

Foreword

This manual is designed primarily for use by trained mechanics in a properly equipped shop. However, it contains enough detail and basic information to make it useful to the owner who desires to perform his own basic maintenance and repair work. A basic knowledge of mechanics, the proper use of tools, and workshop procedures must be understood in order to carry out maintenance and repair satisfactorily. Whenever the owner has insufficient experience or doubts his ability to do the work, all adjustments, maintenance, and repair should be carried out only by qualified mechanics.

In order to perform the work efficiently and to avoid costly mistakes, read the text, thoroughly familiarize yourself with the procedures before starting work, and then do the work carefully in a clean area. Whenever special tools or equipment are specified, do not use makeshift tools or equipment. Precision measurements can only be made if the proper instruments are used, and the use of substitute tools may adversely affect safe operation.

For the duration of the warranty period, we recommend that all repairs and scheduled maintenance be performed in accordance with this service manual. Any owner maintenance or repair procedure not performed in accordance with this manual may void the warranty.

To get the longest life out of your vehicle.

- Follow the Periodic Maintenance Chart in the Service Manual.
- Be alert for problems and non-scheduled maintenance.
- Use proper tools and genuine Kawasaki Motorcycle parts. Special tools, gauges, and testers that are necessary when servicing Kawasaki motorcycles are introduced by the Service Manual. Genuine parts provided as spare parts are listed in the Parts Catalog.
- Follow the procedures in this manual carefully. Don't take shortcuts.
- Remember to keep complete records of maintenance and repair with dates and any new parts installed.

How to Use This Manual

In this manual, the product is divided into its major systems and these systems make up the manual's chapters. The Quick Reference Guide shows you all of the product's system and assists in locating their chapters. Each chapter in turn has its own comprehensive Table of Contents.

For example, if you want stick coil information, use the Quick Reference Guide to locate the Electrical System chapter. Then, use the Table of Contents on the first page of the chapter to find the Stick Coil section.

Whenever you see symbols, heed their instructions! Always follow safe operating and maintenance practices.

⚠ DANGER

DANGER indicates a hazardous situation which, if not avoided, will result in death or serious injury.

⚠ WARNING

WARNING indicates a hazardous situation which, if not avoided, could result in death or serious injury.

NOTICE

NOTICE is used to address practices not related to personal injury.

This manual contains four more symbols which will help you distinguish different types of information.

NOTE

○*NOTE indicates information that may help or guide you in the operation or service of the vehicle.*

- Indicates a procedural step or work to be done.

○Indicates a procedural sub-step or how to do the work of the procedural step it follows. It also precedes the text of a NOTE.

★Indicates a conditional step or what action to take based on the results of the test or inspection in the procedural step or sub-step it follows.

In most chapters an exploded view illustration of the system components follows the Table of Contents. In these illustrations you will find the instructions indicating which parts require specified tightening torque, oil, grease or a locking agent during assembly.

General Information

Table of Contents

Before Servicing 1-2
Model Identification..... 1-7
General Specifications..... 1-8
Unit Conversion Table 1-11

Before Servicing

Before starting to perform an inspection service or carry out a disassembly and reassembly operation on a motorcycle, read the precautions given below. To facilitate actual operations, notes, illustrations, photographs, cautions, and detailed descriptions have been included in each chapter wherever necessary. This section explains the items that require particular attention during the removal and reinstallation or disassembly and reassembly of general parts.

Especially note the following.

Battery Ground

Before completing any service on the motorcycle, disconnect the battery cables from the battery to prevent the engine from accidentally turning over. Disconnect the ground cable (–) first and then the positive (+). When completed with the service, first connect the positive (+) cable to the positive (+) terminal of the battery then the negative (–) cable to the negative terminal.

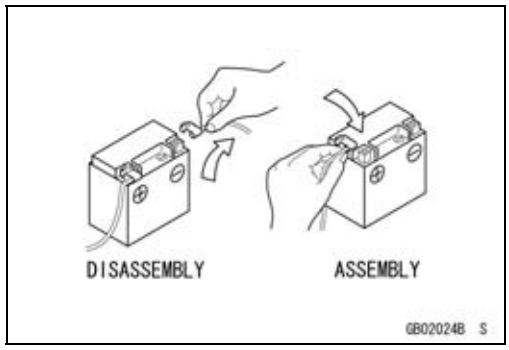

Edges of Parts

Lift large or heavy parts wearing gloves to prevent injury from possible sharp edges on the parts.

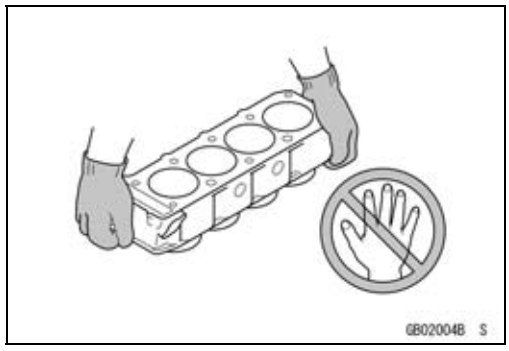

Solvent

Use a high flash-point solvent when cleaning parts. High flash-point solvent should be used according to directions of the solvent manufacturer.

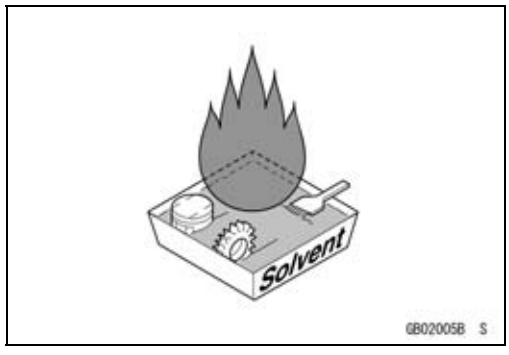

Cleaning Vehicle before Disassembly

Clean the vehicle thoroughly before disassembly. Dirt or other foreign materials entering into sealed areas during vehicle disassembly can cause excessive wear and decrease performance of the vehicle.

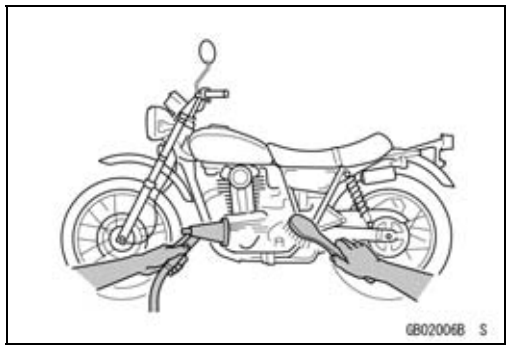

Before Servicing

Arrangement and Cleaning of Removed Parts

Disassembled parts are easy to confuse. Arrange the parts according to the order the parts were disassembled and clean the parts in order prior to assembly.

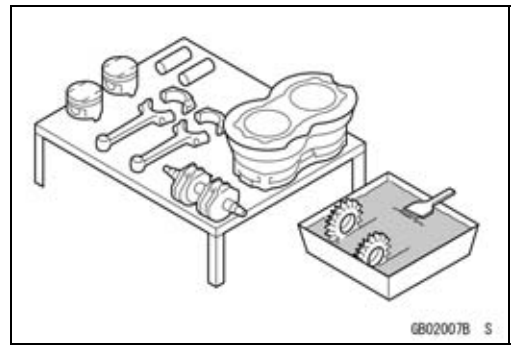

Storage of Removed Parts

After all the parts including subassembly parts have been cleaned, store the parts in a clean area. Put a clean cloth or plastic sheet over the parts to protect from any foreign materials that may collect before re-assembly.

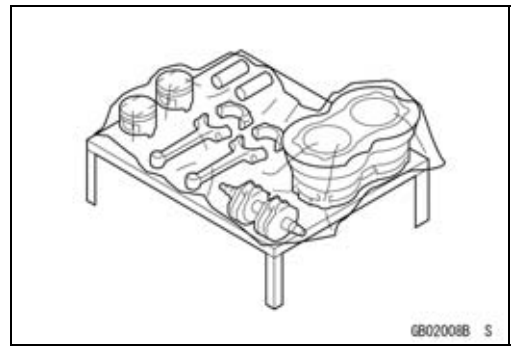

Inspection

Reuse of worn or damaged parts may lead to serious accident. Visually inspect removed parts for corrosion, discoloration, or other damage. Refer to the appropriate sections of this manual for service limits on individual parts. Replace the parts if any damage has been found or if the part is beyond its service limit.

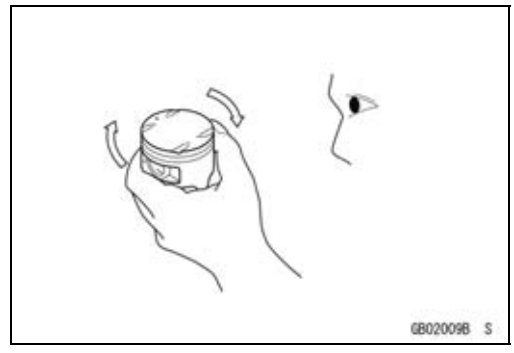

Replacement Parts

Replacement parts must be KAWASAKI genuine or recommended by KAWASAKI. Gaskets, O-rings, oil seals, grease seals, circlips, cotter pins or self-locking nuts must be replaced with new ones whenever disassembled.

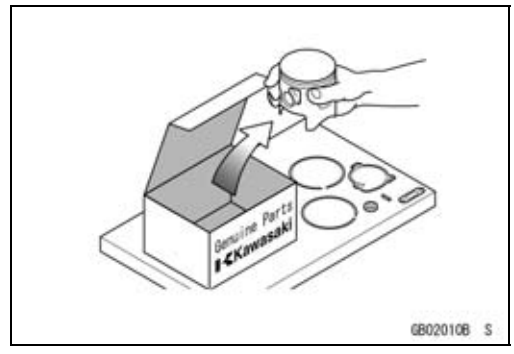

Assembly Order

In most cases assembly order is the reverse of disassembly, however, if assembly order is provided in this Service Manual, follow the procedures given.

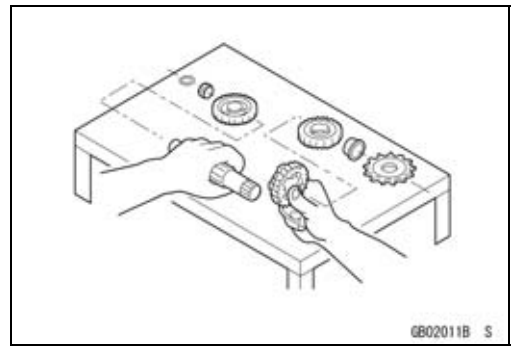

Before Servicing

Tightening Sequence

Generally, when installing a part with several bolts, nuts, or screws, start them all in their holes and tighten them to a snug fit. Then tighten them according to the specified sequence to prevent case warpage or deformation which can lead to malfunction. Conversely when loosening the bolts, nuts, or screws, first loosen all of them by about a quarter turn and then remove them. If the specified tightening sequence is not indicated, tighten the fasteners alternating diagonally.

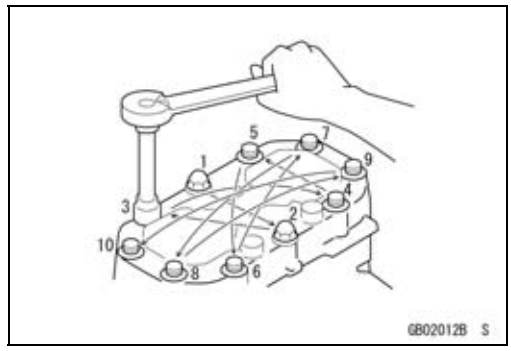

Tightening Torque

Incorrect torque applied to a bolt, nut, or screw may lead to serious damage. Tighten fasteners to the specified torque using a good quality torque wrench.

All of the tightening torque values are for use with dry, solvent - cleaned threads unless otherwise indicated. If a fastener which should have dry, clean threads gets contaminated with lubricant, etc., applying even the specified torque could damage it.

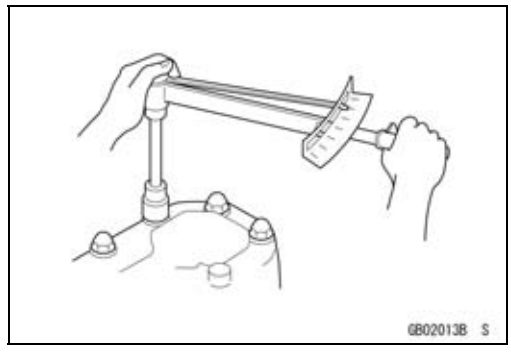

Force

Use common sense during disassembly and assembly, excessive force can cause expensive or hard to repair damage. When necessary, remove screws that have a non -permanent locking agent applied using an impact driver. Use a plastic-faced mallet whenever tapping is necessary.

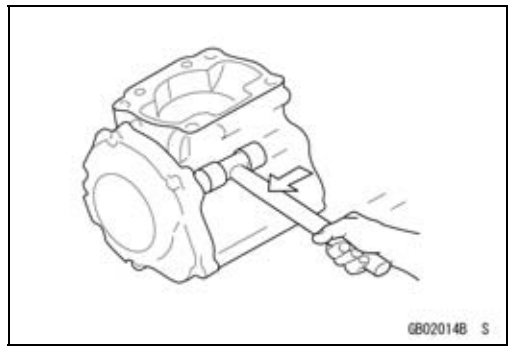

Gasket, O-ring

Hardening, shrinkage, or damage of both gaskets and O-rings after disassembly can reduce sealing performance. Remove old gaskets and clean the sealing surfaces thoroughly so that no gasket material or other material remains. Install the new gaskets and replace the used O-rings when re-assembling.

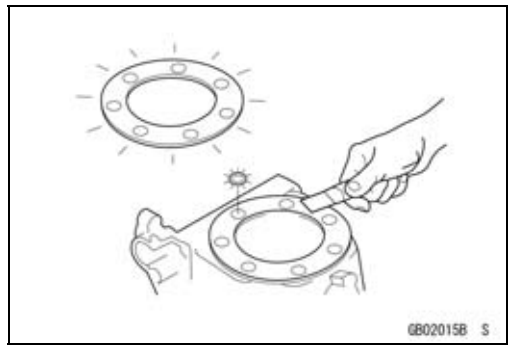

Liquid Gasket, Non-permanent Locking Agent

For applications that require Liquid Gasket or a Non-permanent Locking Agent, clean the surfaces so that no oil residue remains before applying liquid gasket or non-permanent locking agent. Do not apply them excessively. Excessive application can clog oil passages and cause serious damage.

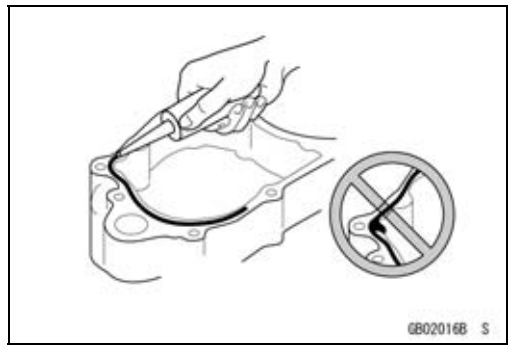

Before Servicing

Press

For items such as bearings or oil seals that must be pressed into place, apply small amount of oil to the contact area. Be sure to maintain proper alignment and use smooth movements when installing.

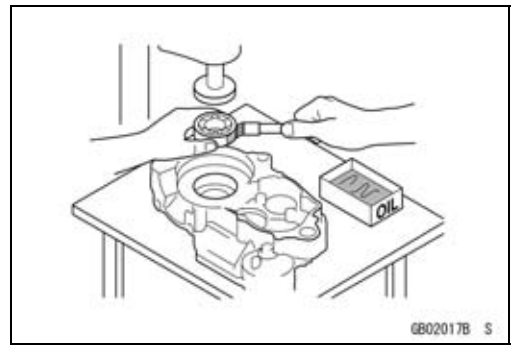

Ball Bearing and Needle Bearing

Do not remove pressed ball or needle unless removal is absolutely necessary. Replace with new ones whenever removed. Press bearings with the manufacturer and size marks facing out. Press the bearing into place by putting pressure on the correct bearing race as shown.

Pressing the incorrect race can cause pressure between the inner and outer race and result in bearing damage.

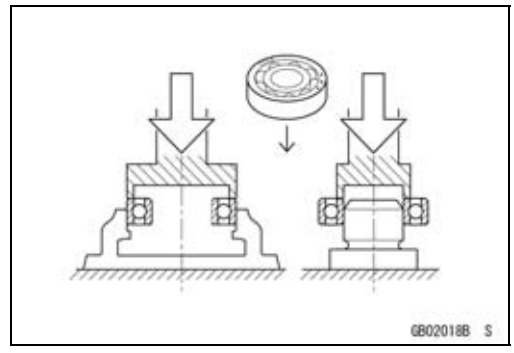

Oil Seal, Grease Seal

Do not remove pressed oil or grease seals unless removal is necessary. Replace with new ones whenever removed. Press new oil seals with manufacture and size marks facing out. Make sure the seal is aligned properly when installing.

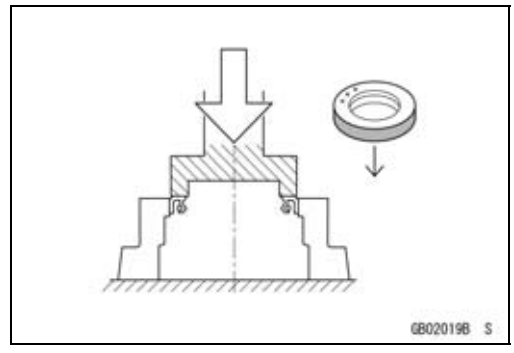

Apply specified grease to the lip of seal before installing the seal.

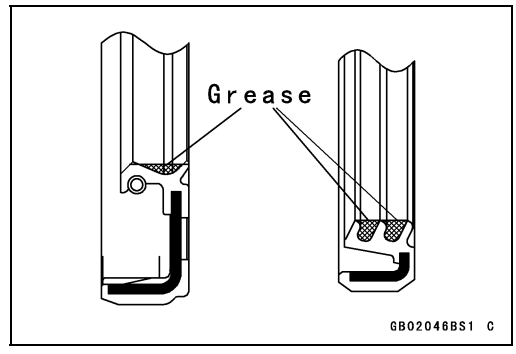

Circlips, Cotter Pins

Replace the circlips or cotter pins that were removed with new ones. Take care not to open the clip excessively when installing to prevent deformation.

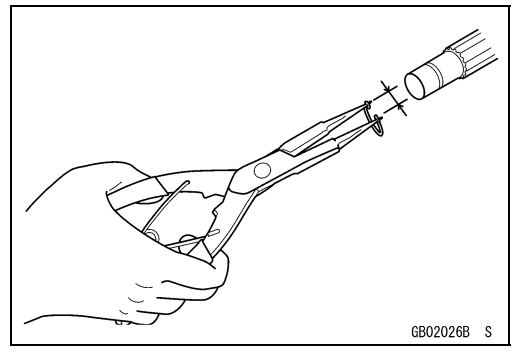

Before Servicing

Lubrication

It is important to lubricate rotating or sliding parts during assembly to minimize wear during initial operation. Lubrication points are called out throughout this manual, apply the specific oil or grease as specified.

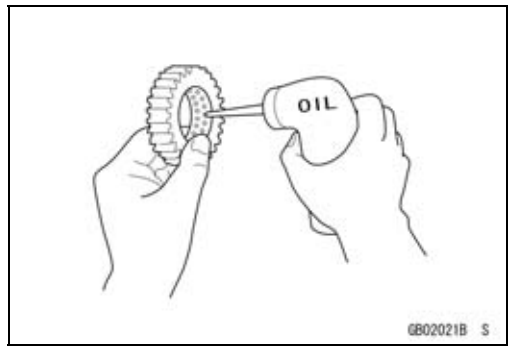

Direction of Engine Rotation

When rotating the crankshaft by hand, the free play amount of rotating direction will affect the adjustment. Rotate the crankshaft to positive direction (clockwise viewed from output side).

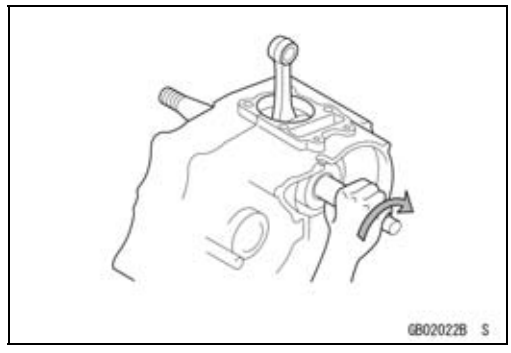

Electrical Wires

A two-color wire is identified first by the primary color and then the stripe color. Unless instructed otherwise, electrical wires must be connected to those of the same color.

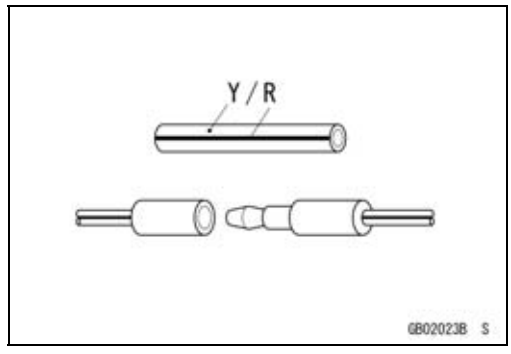

Instrument

Use a meter that has enough accuracy for an accurate measurement. Read the manufacture's instructions thoroughly before using the meter. Incorrect values may lead to improper adjustments.

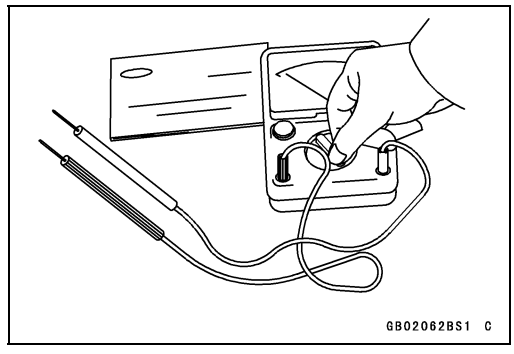

Handling Electronic Parts

Severe impacts to electronic parts such as the ECU, sensor, and relay can damage them. If dropped on a hard surface, replace such parts with new ones.

If a high voltage that is created by static electricity is applied to the electric parts, it could cause them to fail. To avoid this, touch a non-painted metal surface to discharge any static electricity that is accumulated on your body before inspecting or replacing electric parts.

Be careful not to touch the electrical terminals of the electronic parts. The static electricity discharged from your body could damage them or deform the electrical terminals.

Model Identification

ZX1000XH Left Side View



ZX1000XH Right Side View



Frame Number

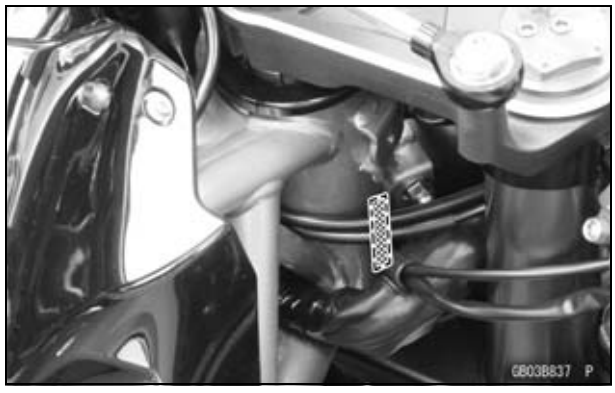

Engine Number

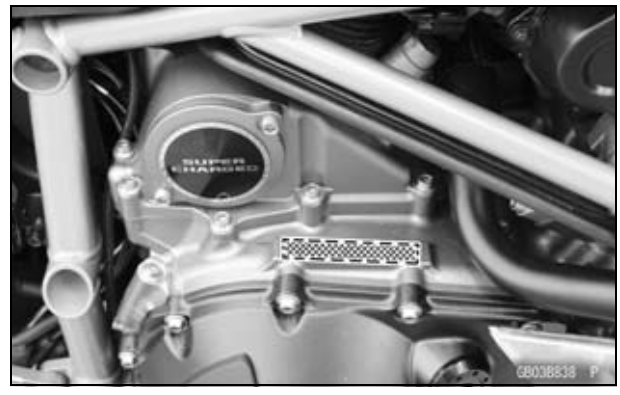

General Specifications

Items	ZX1000XH
Dimensions	
Overall Length	2 085 mm (82.09 in.)
Overall Width	770 mm (30.3 in.)
Overall Height	1 125 mm (44.29 in.)
Wheel Base	1 455 mm (57.28 in.)
Ground Clearance	130 mm (5.12 in.)
Seat Height	825 mm (32.5 in.)
Curb Mass:	238 kg (525 lb)
Front	124 kg (273 lb)
Rear	114 kg (251 lb)
Fuel Tank Capacity	17 L (4.5 US gal.)
Performance	
Minimum Turning Radius	3.4 m (11.2 ft.)
Engine	
Type	4-stroke, DOHC, 4-cylinder
Cooling System	Liquid-cooled
Bore and Stroke	76.0 × 55.0 mm (2.99 × 2.17 in.)
Displacement	998 cm³ (60.9 cu in.)
Compression Ratio	8.5:1
Maximum Horsepower	150.8 kW (205 PS) @11 000 r/min (rpm) (TH) 147.2 kW (200 PS) @10 000 r/min (rpm) (SEA-B1) 126 kW (171 PS) @9 000 r/min (rpm) (US, CAL, CA) – – –
Maximum Torque	133.5 N·m (13.6 kgf·m, 98 ft·lb) @10 000 r/min (TH) 140.4 N·m (14.3 kgf·m, 104 ft·lb) @10 000 r/min (rpm) (SEA-B1) 133.5 N·m (13.6 kgf·m, 98 ft·lb) @9 000 r/min (rpm) (US, CAL, CA) – – –
Fuel System	FI (Fuel Injection) MIKUNI 50EIDW × 4
Fuel Type:	
Minimum Octane Rating:	
Research Octane Number (RON)	95
Antiknock Index (RON + MON)/2	90
Starting System	Electric starter
Ignition System	Battery and coil (transistorized)
Timing Advance	Electronically advanced (IC igniter in ECU)
Ignition Timing	From 10° BTDC @1 100 r/min (rpm) to 33° BTDC @11 000 r/min (rpm) (SEA-B1) From 10° BTDC @1 100 r/min (rpm) to 33° BTDC @9 000 r/min (rpm)
Spark Plug	NGK SILMAR9B9
Cylinder Numbering Method	Left to right, 1-2-3-4
Firing Order	1-2-4-3

General Specifications

Items	ZX1000XH
Valve Timing:	
Intake:	
Open	37° BTDC
Close	47° ABDC
Duration	264°
Exhaust:	
Open	50° BBDC
Close	30° ATDC
Duration	260°
Lubrication System	Forced lubrication (wet sump)
Engine Oil:	
Type	API SG, SH, SJ, SL or SM with JASO MA, MA1 or MA2
Viscosity	SAE 10W-40
Capacity	5.0 L (5.3 US qt)
Drive Train	
Primary Reduction System:	
Type	Gear
Reduction Ratio	1.551 (76/49)
Clutch Type	Wet multi disc
Transmission:	
Type	6-speed, constant mesh, return shift
Gear Ratios:	
1st	3.188 (51/16)
2nd	2.526 (48/19)
3rd	2.045 (45/22)
4th	1.727 (38/22)
5th	1.524 (32/21)
6th	1.348 (31/23)
Final Drive System:	
Type	Chain drive
Reduction Ratio	2.444 (44/18)
Overall Drive Ratio	5.110 @Top gear
Frame	
Type	Trellis, high-tensile steel
Caster (Rake Angle)	24.5°
Trail	103 mm (4.06 in.)
Front Tire:	
Type	Tubeless
Size	120/70 ZR17M/C (58W)
Rim Size	J17M/C × MT3.50
Rear Tire:	
Type	Tubeless
Size	200/55 ZR17 M/C (78W)
Rim Size	J17M/C × MT6.00

General Specifications

Items	ZX1000XH
Front Suspension:	
Type	Telescopic fork (upside-down)
Wheel Travel	120 mm (4.72 in.)
Rear Suspension:	
Type	Swingarm (Uni-Trak)
Wheel Travel	135 mm (5.31 in.)
Brake Type:	
Front	Dual discs
Rear	Single disc
Electrical Equipment	
Battery	12 V 8.6 Ah (10 HR)
Headlight:	
High Beam	LED
Low Beam	LED
Tail/Brake Light	LED
Alternator:	
Type	Three-phase AC
Maximum Output	14.0 V – 30.0 A @5 000 r/min (rpm)

Specifications are subject to change without notice, and may not apply to every country.

Unit Conversion Table

Prefixes for Units:

Prefix	Symbol	Power
mega	M	× 1 000 000
kilo	k	× 1 000
centi	c	× 0.01
milli	m	× 0.001
micro	μ	× 0.000001

Units of Mass:

kg	×	2.205	=	lb
g	×	0.03527	=	oz

Units of Volume:

L	×	0.2642	=	gal (US)
L	×	0.2200	=	gal (IMP)
L	×	1.057	=	qt (US)
L	×	0.8799	=	qt (IMP)
L	×	2.113	=	pint (US)
L	×	1.816	=	pint (IMP)
mL	×	0.03381	=	oz (US)
mL	×	0.02816	=	oz (IMP)
mL	×	0.06102	=	cu in.

Units of Force:

N	×	0.1020	=	kg
N	×	0.2248	=	lb
kg	×	9.807	=	N
kg	×	2.205	=	lb

Units of Length:

km	×	0.6214	=	mile
m	×	3.281	=	ft
mm	×	0.03937	=	in.

Units of Torque:

N·m	×	0.1020	=	kgf·m
N·m	×	0.7376	=	ft·lb
N·m	×	8.851	=	in·lb
kgf·m	×	9.807	=	N·m
kgf·m	×	7.233	=	ft·lb
kgf·m	×	86.80	=	in·lb

Units of Pressure:

kPa	×	0.01020	=	kgf/cm²
kPa	×	0.1450	=	psi
kPa	×	0.7501	=	cmHg
kgf/cm²	×	98.07	=	kPa
kgf/cm²	×	14.22	=	psi
cmHg	×	1.333	=	kPa

Units of Speed:

km/h	×	0.6214	=	mph

Units of Power:

kW	×	1.360	=	PS
kW	×	1.341	=	HP
PS	×	0.7355	=	kW
PS	×	0.9863	=	HP

Units of Temperature:

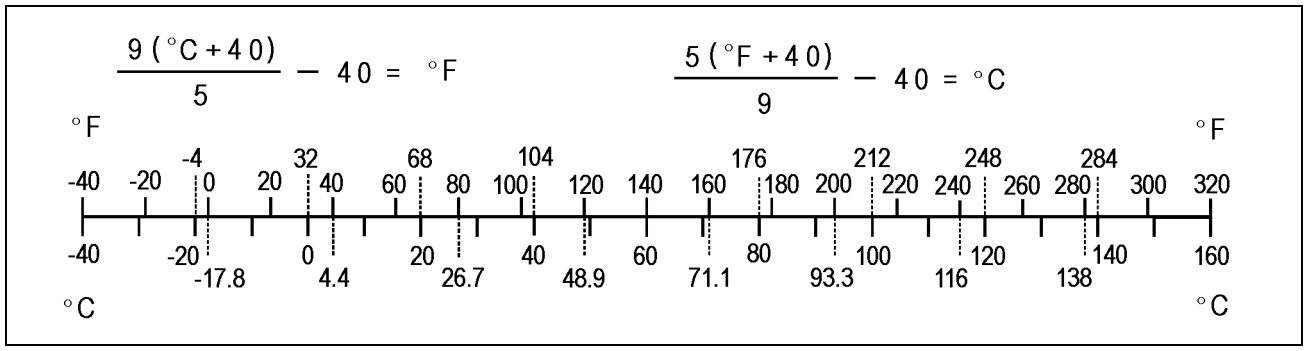

Periodic Maintenance

Table of Contents

Periodic Maintenance Chart 2-3
Torque and Locking Agent 2-6
Specifications 2-14
Special Tools 2-16
Periodic Maintenance Procedures 2-17
Fuel System (DFI) 2-17
Air Cleaner Element Replacement 2-17
Idle Speed Inspection 2-18
Idle Speed Adjustment 2-18
Throttle Control System Inspection 2-18
Engine Vacuum Synchronization Inspection 2-19
Fuel System Inspection 2-21
Fuel Filter Replacement 2-21
Fuel Pump Replacement 2-23
Fuel Hose Replacement 2-23
Evaporative Emission Control System Inspection (Other than US and CA Models) 2-25
Cooling System 2-25
Coolant Level Inspection 2-25
Cooling System Inspection 2-26
Coolant Change 2-26
Water Hose and O-ring Replacement 2-29
Engine Top End 2-30
Valve Clearance Inspection 2-30
Valve Clearance Adjustment 2-31
Air Suction System Damage Inspection 2-35
Clutch 2-35
Clutch System Inspection 2-35
Clutch Operation Inspection 2-36
Clutch Fluid Level Inspection 2-36
Clutch Fluid Change 2-37
Clutch Hose Replacement 2-37
Rubber Parts of Clutch Master Cylinder/Slave Cylinder Replacement 2-38
Engine Lubrication System 2-38
Engine Oil Change 2-39
Oil Filter Replacement 2-40
Wheels/Tires 2-40
Air Pressure Inspection 2-40
Wheels and Tires Inspection 2-40
Wheel Bearing Damage Inspection 2-41
Final Drive 2-42
Drive Chain Lubrication Condition Inspection 2-42
Drive Chain Slack Inspection 2-43
Drive Chain Slack Adjustment 2-43
Drive Chain Wear Inspection 2-45
Chain Guide Wear Inspection 2-45
Brakes 2-46
Brake System Inspection 2-46
Brake Operation Inspection 2-47
Brake Fluid Level Inspection 2-47
Brake Fluid Change 2-48

Brake Hose and Pipe Replacement 2-52
Master Cylinder Rubber Parts Replacement 2-54
Caliper Rubber Parts Replacement 2-54
Brake Pad Wear Inspection 2-56
Brake Light Switch Operation Inspection 2-57
Suspension 2-58
Suspension System Inspection 2-58
Lubrication of Rear Suspension 2-61
Steering 2-61
Steering Play Inspection 2-61
Steering Play Adjustment 2-62
Steering Stem Bearing Lubrication 2-63
Electronic Steering Damper Oil Leak Inspection 2-64
Electrical System 2-65
Lights and Switches Operation Inspection 2-65
Headlight Aiming Inspection 2-67
Side Stand Switch Operation Inspection 2-68
Engine Start/Stop Switch Operation Inspection 2-69
Spark Plug Condition Inspection 2-69
Spark Plug Replacement 2-70
Supercharger 2-70
Supercharger Oil Screen Replacement 2-70
Supercharger Impeller Axial Play Inspection 2-71
Others 2-73
Chassis Parts Lubrication 2-73
Condition of Bolts, Nuts and Fasteners Tightness Inspection 2-74

Periodic Maintenance Chart

The scheduled maintenance must be done in accordance with this chart to keep the motorcycle in good running condition.**The initial maintenance is vitally important and must not be neglected.**

Periodic Inspection

*A: Service at number of years shown or indicated odometer reading intervals, whichever comes first.
*B: For higher odometer readings, repeat at the frequency interval established here.
*C: Service more frequently when operating in severe conditions: dusty, wet, muddy, high speed, or frequent starting/stopping.
○: Emission Related Item

Q: Inspection
: Change or Replace
: Lubrication

	Items	year (*A)	Odometer Reading (*B) × 1 000 km (× 1 000 mile) 1 (0.6)	6 (3.8)	12 (7.6)	18 (11.4)	24 (15.2)	See Page
Fuel System								
○	Air cleaner element (*C)							2-17
○	Idle speed		Q		Q		Q	2-18
○	Throttle control system (play, smooth return, no drag)	Q:1	Q		Q		Q	2-18
○	Engine vacuum synchronization				Q		Q	2-19
	Fuel system	Q:1	Q		Q		Q	2-21
	Fuel filter							2-21
	Fuel pump		: every 48 000 km (30 000 mile)					2-23
	Fuel hose	:5						2-23
○	Evaporative emission control system (other than US and CA Models)		Q	Q	Q	Q	Q	2-25
Cooling System								
	Coolant level		Q		Q		Q	2-25
	Cooling system	Q:1	Q		Q		Q	2-26
	Coolant, water hose and O-ring	:3	: every 36 000 km (22 500 mile)					2-26, 2-29
Engine Top End								
○	Valve clearance						Q	2-30
○	Air suction system				Q		Q	2-35
Clutch								
	Clutch operation (play, engagement, disengagement)		Q		Q		Q	2-36
	Clutch fluid level	Q:1	Q		Q		Q	2-36
	Clutch fluid, hose and pipe	Q:1	Q		Q		Q	2-35
	Clutch fluid	:2						2-37

Periodic Maintenance Chart

	Items	year (*A)	Odometer Reading (*B) × 1 000 km (× 1 000 mile) 1 (0.6)	6 (3.8)	12 (7.6)	18 (11.4)	24 (15.2)	See Page
	Clutch hose/rubber parts of clutch master cylinder and slave cylinder	:4	: every 48 000 km (30 000 mile)					2-37, 2-38
Engine Lubrication System								
	Engine oil (*C) and oil filter	:1						2-39, 2-40
Wheels and Tires								
	Tire air pressure	:1						2-40
	Wheel and tire	:1						2-40
	Wheel bearing damage	:1						2-41
Final Drive								
	Drive chain lubrication condition (*C)		: every 600 km (400 mile)					2-42
	Drive chain slack (*C)		: every 1 000 km (600 mile)					2-43
	Drive chain wear (*C)							2-45
	Drive chain guide wear							2-45
Brakes								
	Brake system	:1						2-46
	Brake operation (effectiveness, play, no drag)	:1						2-47
	Brake fluid level	:1						2-47
	Brake fluid (front and rear)	:2						2-48
	Brake hose	:4						2-52
	Rubber parts of brake master cylinder and caliper	:4	: every 48 000 km (30 000 mile)					2-54
	Brake pad wear (*C)							2-56
	Brake light switch operation							2-57
Suspension								
	Suspension system	:1						2-58
	Lubrication of rear suspension							2-61
Steering								
	Steering play	:1						2-61
	Steering stem bearing	:2						2-63
	Electronic steering damper oil leak							2-64
Electrical System								
	Electrical system	:1						2-65
○	Spark plug							2-69
			: every 48 000 km (30 000 mile)					2-70

Periodic Maintenance Chart

Items		year (*A)	Odometer Reading (*B) × 1 000 km (× 1 000 mile) 1 (0.6)	6 (3.8)	12 (7.6)	18 (11.4)	24 (15.2)	See Page
Supercharger								
	Supercharger oil screen						↻	2-70
	Supercharger impeller axial play		Q		Q		Q	2-71
Others								
	Chassis parts	:1						2-73
	Condition of bolts, nuts and fasteners		Q		Q		Q	2-74

Torque and Locking Agent

The following tables list the tightening torque for the major fasteners requiring use of a non-permanent locking agent or silicone sealant etc. All of the values are for use with dry solvent - cleaned threads unless otherwise indicated.

Letters used in the “Remarks” column mean:
AL: Tighten the two clamp bolts alternately two times to ensure even tightening torque.
EO: Apply engine oil.
G: Apply grease.
L: Apply a non-permanent locking agent.
LG: Apply liquid gasket.
Lh: Left-hand Threads
MO: Apply molybdenum disulfide oil solution.
(mixture of the engine oil and molybdenum disulfide grease in a weight ratio 10:1)
R: Replacement Parts
S: Follow the specified tightening sequence.
*: After tightening to the first torque, loosen it and tighten to the final torque.

Fastener	Torque			Remarks
	N·m	kgf·m	ft·lb	
Fuel System (DFI)				
Nozzle Assy Mounting Bolts	6.5	0.66	58 in·lb	L
Purge Valve Nut	7.0	0.71	62 in·lb	
Throttle Case Bolts	3.5	0.36	31 in·lb	
Air Intake Chamber Pressure/Temperature Sensor Bolts	5.0	0.51	44 in·lb	
Air Hose Fitting	10	1.0	89 in·lb	L
Air Intake Chamber Bolts	8.0	0.82	71 in·lb	
Air Switching Valve Filter Bracket Bolts	9.8	1.0	87 in·lb	
Blow-off Valve Hose Clamp Screw	3.0	0.31	27 in·lb	
Blow-off Valve Bolts	25	2.5	18	
Air Intake Hose Clamp Screw	3.0	0.31	27 in·lb	
Air Intake Chamber Duct Screen Bolts	3.0	0.31	27 in·lb	L
Air Intake Chamber Mounting Bolts (L = 14 mm)	8.0	0.82	71 in·lb	L, S
Air Intake Chamber Mounting Bolts (L = 95 mm)	8.0	0.82	71 in·lb	L, S
Air Intake Chamber Duct Bolts	6.0	0.61	53 in·lb	L
Throttle Body Assy Mounting Bolts	10	1.0	89 in·lb	
Delivery Pipe Assy Mounting Screws	3.5	0.36	31 in·lb	
Air Cleaner Housing Inner Plate Bolt	6.0	0.61	53 in·lb	L
Air Cleaner Housing Mounting Bolts	10	1.0	89 in·lb	
Air Cleaner Housing Cover Bolts	6.0	0.61	53 in·lb	
IMU Mounting Bolts	6.5	0.66	58 in·lb	L
IMU Bracket Bolts	6.9	0.70	61 in·lb	
Immobilizer Amplifier Bracket Screw	1.2	0.12	11 in·lb	
Vehicle-down Sensor Mounting Bolts	5.9	0.60	52 in·lb	
Camshaft Position Sensor Bolt	10	1.0	89 in·lb	
Spark Plugs	13	1.3	115 in·lb	
Water Temperature Sensor	12	1.2	106 in·lb	
Supercharger Chain Tensioner Mounting Bolts	10	1.0	89 in·lb	L
Supercharger Housing Bolts (M8)	23	2.3	17	

Torque and Locking Agent

Fastener	Torque			Remarks
	N·m	kgf·m	ft·lb	
Supercharger Housing Bolt (M6, L = 20 mm)	10	1.0	89 in·lb	L
Supercharger Sprocket Cover Bolts	10	1.0	89 in·lb	
Supercharger Chain Sprocket Bolt (Upper)	25	2.5	18	L
Supercharger Outer Housing Bolts	23	2.3	17	S
Supercharger Housing Bolts (M6, L = 30 mm)	10	1.0	89 in·lb	L
Supercharger Housing Nozzle	3.0	0.31	27 in·lb	
Supercharger Oil Screen Bolt	20	2.0	15	R
Supercharger Housing Stay Bolts	10	1.0	89 in·lb	L
Supercharger Chain Guide Bolts	10	1.0	89 in·lb	
Supercharger Chain Sprocket Bolt (Lower)	20	2.0	15	L
Exhaust Butterfly Valve Actuator Pulley Bolt	5.0	0.51	44 in·lb	
Exhaust Butterfly Valve Actuator Mounting Bolt	1.0	0.10	8.9 in·lb	
Exhaust Butterfly Valve Actuator Mounting Screw	1.2	0.12	11 in·lb	
Knock Sensor Bolt	25	2.5	18	
Oxygen Sensor	25	2.5	18	
Fuel Pump Terminal Nuts	0.98	0.10	8.7 in·lb	R
Fuel Pump Assembly Screws	0.98	0.10	8.7 in·lb	R
Fuel Pump Bolts	10	1.0	89 in·lb	L, S
Canister Upper Bracket Bolts	9.0	0.92	80 in·lb	
Canister Lower Bracket Bolts	9.8	1.0	87 in·lb	
Cooling System				
Coolant Reserve Tank Screws	1.2	0.12	11 in·lb	
Water Temperature Sensor	12	1.2	106 in·lb	
Water Pipe Bolt	10	1.0	89 in·lb	
Thermostat Housing Bolts	6.0	0.61	53 in·lb	
Water Hose Fitting Cover Bolts	10	1.0	89 in·lb	
Upper Radiator Mounting Bolts	15	1.5	11	
Radiator Cover Bolts	10	1.0	89 in·lb	L
Lower Radiator Mounting Bolt	10	1.0	89 in·lb	
Radiator Stay Bolt	10	1.0	89 in·lb	
Radiator Fan Bolts	8.4	0.86	74 in·lb	
Water Hose Fitting	10	1.0	89 in·lb	L
Water Pump Impeller Bolt	10	1.0	89 in·lb	
Water Pump Cover Bolts (L = 25 mm)	10	1.0	89 in·lb	
Water Pump Cover Bolts (L = 40 mm)	10	1.0	89 in·lb	
Coolant Drain Bolt	10	1.0	89 in·lb	
Engine Top End				
Air Suction Valve Cover Bolts	10	1.0	89 in·lb	L
Sub Cover Bolts	10	1.0	89 in·lb	L
Cylinder Head Cover Bolts	10	1.0	89 in·lb	S
Canister Lower Bracket Bolts	9.8	1.0	87 in·lb	
Air Switching Valve Filter Bracket Bolts	9.8	1.0	87 in·lb	
Camshaft Sprocket Bolts	15	1.5	11	L

Torque and Locking Agent

Fastener	Torque			Remarks
	N·m	kgf·m	ft·lb	
Upper Camshaft Chain Guide Bolts	12	1.2	106 in·lb	S
Front Camshaft Chain Guide Bolt (Upper)	25	2.5	18	
Camshaft Chain Tensioner Mounting Bolts	10	1.0	89 in·lb	
Cylinder Head Bolts (M10), First	30	3.1	22	MO, S
Cylinder Head Bolts (M10), Final	67	6.8	49	MO, S
Front Camshaft Chain Guide Bolt (Lower)	12	1.2	106 in·lb	
Rear Camshaft Chain Guide Bolt	25	2.5	18	
Camshaft Cap Bolts	12	1.2	106 in·lb	S
Cylinder Head Plugs	19.6	2.00	14.5	L
Cylinder Head Bolts (M6)	12	1.2	106 in·lb	S
Throttle Body Assy Holder Bolts	10	1.0	89 in·lb	S
Muffler Body Stay Bolt	25	2.5	18	L
Muffler Body Mounting Bolt	25	2.5	18	
Muffler Body Nozzle Bolts	10	1.0	89 in·lb	L
Muffler Body End Cover Bolts	10	1.0	89 in·lb	L
Exhaust Pipe Holder Nuts	17	1.7	13	S
Exhaust Butterfly Valve Actuator Pulley Bolt	5.0	0.51	44 in·lb	
Exhaust Butterfly Valve Actuator Mounting Bolt	1.0	0.10	8.9 in·lb	
Exhaust Butterfly Valve Actuator Mounting Screw	1.2	0.12	11 in·lb	
Exhaust Butterfly Valve Cable Locknuts	5.5	0.56	49 in·lb	
Muffler Body Clamp Bolt	17	1.7	13	
Exhaust Pipe Mounting Bolt	34	3.5	25	
Exhaust Butterfly Valve Cover Bolts	6.0	0.61	53 in·lb	
Clutch				
Clutch Reservoir Cap (for reference)	1.5	0.15	13 in·lb	
Clutch Master Cylinder Bleed Valve	5.5	0.56	49 in·lb	
Clutch Reservoir Bracket Bolt	6.9	0.70	61 in·lb	
Clutch Lever Pivot Bolt Locknut	6.0	0.61	53 in·lb	R
Clutch Master Cylinder Clamp Bolts	9.0	0.92	80 in·lb	S
Clutch Cover Damper Plate Bolts	10	1.0	89 in·lb	L
Clutch Cover Bolts	12	1.2	106 in·lb	L (1), S
Oil Filler Plug	10	1.0	89 in·lb	
Crankshaft Timing Plug	25	2.5	18	
Clutch Outer Cover Bolts	5.0	0.51	44 in·lb	L
Water Hose Fitting Cover Bolts	10	1.0	89 in·lb	
Clutch Slave Cylinder Bleed Valve	7.9	0.81	70 in·lb	
Clutch Hose Banjo Bolts	25	2.5	18	
Clutch Slave Cylinder Mounting Bolt (L = 65 mm)	10	1.0	89 in·lb	L
Clutch Slave Cylinder Mounting Bolts (L = 20 mm)	10	1.0	89 in·lb	L
Clutch Hub Nut	130	13.3	95.9	R
Clutch Stopper Bolts	10	1.0	89 in·lb	
Engine Lubrication System				
Oil Filler Plug	10	1.0	89 in·lb	

Torque and Locking Agent

Fastener	Torque			Remarks
	N·m	kgf·m	ft·lb	
Oil Pump Drive Chain Guide Bolts	10	1.0	89 in·lb	L
Oil Pump Driven Gear Bolt	10	1.0	89 in·lb	L, Lh
Oil Passage Plugs	20	2.0	15	L
Oil Cooler Bolts	15	1.5	11	L, S
Oil Filter	17	1.7	13	G, R
Oil Filter Pipe	35	3.6	26	L
Oil Pressure Switch	15	1.5	11	LG
Oil Pressure Relief Valve	15	1.5	11	L
Engine Oil Drain Bolt	25	2.5	18	
Oil Pan Bolts	10	1.0	89 in·lb	S
Engine Removal/Installation				
Front Engine Mounting Bolts (Rear)	44	4.5	32	L, S
Front Engine Mounting Bolts (Front)	44	4.5	32	L, S
Swingarm Mounting Plate Nut (Upper)	44	4.5	32	R, S
Rear Frame Front Bolts	25	2.5	18	S
Swingarm Pivot Shaft Nut	108	11.0	79.7	S
Swingarm Mounting Plate Bolt (Lower)	44	4.5	32	L, S
Side Stand Bracket Bolt (Rear)	49	5.0	36	L, S
Rear Engine Mounting Bolts	44	4.5	32	S
Clamp Mounting Bolts	10	1.0	89 in·lb	
Side Stand Bracket Bolts (Front)	49	5.0	36	L, S
Crankshaft/Transmission				
Breather Cover Bolts	10	1.0	89 in·lb	
Balancer Shaft Clamp Bolts	10	1.0	89 in·lb	
Balancer Shaft Clamp Lever Bolts	33	3.4	24	L
Breather Plate Bolts	10	1.0	89 in·lb	L
Oil Passage Plugs	20	2.0	15	L
Crankcase Oil Nozzle	10	1.0	89 in·lb	L
Oil Nozzles (M5)	3.0	0.31	27 in·lb	
Transmission Oil Nozzle Pipe Bolts	10	1.0	89 in·lb	L
Crankcase Oil Nozzle Bolts	25	2.5	18	
Bearing Holder Screws	10	1.0	89 in·lb	L
Oil Nozzle (M8)	5.0	0.51	44 in·lb	
Connecting Rod Big End Nuts	see the text	←	←	MO, R
Crankcase Bolts (M7, L = 60 mm)	20	2.0	15	S
Crankcase Bolts (M8)	27	2.8	20	S
Crankcase Bolts (M6, L = 40 mm)	12	1.2	106 in·lb	S
Crankcase Bolt (M6, L = 30 mm)	12	1.2	106 in·lb	S
Crankcase Bolts (M7, L = 45 mm)	20	2.0	15	S
Crankcase Bolts (M10, L = 120 mm), First	12	1.2	106 in·lb	MO, S
Crankcase Bolts (M10, L = 120 mm), Final	48	4.9	35	MO, S
Crankcase Bolts (M10, L = 100 mm), First	12	1.2	106 in·lb	MO, S

Torque and Locking Agent

Fastener	Torque			Remarks
	N·m	kgf·m	ft·lb	
Crankcase Bolts (M10, L = 100 mm), Final	48	4.9	35	MO, S
Crankcase Bolts (M7, L = 85 mm)	20	2.0	15	S
Bearing Holder Screws	10	1.0	89 in·lb	L
Transmission Case Bolts	20	2.0	15	
Shift Drum Cam Holder Bolt	12	1.2	106 in·lb	L
Oil Nozzles (M8)	5.0	0.51	44 in·lb	
Gear Positioning Lever Bolt	12	1.2	106 in·lb	
Shift Shaft Return Spring Pin	29	3.0	21	L
Shift Lever Clamp Bolt	9.8	1.0	87 in·lb	
Wheels/Tires				
Front Axle Clamp Bolts	20	2.0	15	S
Air Valve Nuts	4.5	0.46	40 in·lb	L
Front Axle Nut	127	13.0	93.7	
Rear Wheel Nuts	110	11.2	81.1	S
Final Drive				
Engine Sprocket Nut	145	14.8	107	MO
Drive Chain Guide Bolt (L = 14 mm)	10	1.0	89 in·lb	L
Drive Chain Guide Bolts (L = 30 mm)	10	1.0	89 in·lb	
Engine Sprocket Cover Bolt	10	1.0	89 in·lb	L
Bearing Housing Clamp Bolts	33	3.4	24	S
Rear Sprocket Nuts	59	6.0	44	R, S
Rear Axle Nut, First*	220	22.4	162	
Rear Axle Nut, Final*	255	26.0	188	
Brakes				
Front Brake Fluid Reservoir Cap Screws	0.70	0.07	6.2 in·lb	
Front Master Cylinder Bleed Valve	5.5	0.56	49 in·lb	
Front Master Cylinder Clamp Bolts	11	1.1	97 in·lb	S
Brake Lever Pivot Bolt Locknut	6.0	0.61	53 in·lb	R
Front Brake Fluid Reservoir Bracket Bolt	8.8	0.90	78 in·lb	
Brake Hose Banjo Bolts	25	2.5	18	
Front Caliper Bleed Valves	16	1.6	12	
Front Caliper Mounting Bolts	34	3.5	25	S
Front Brake Disc Mounting Bolts	27	2.8	20	L, S
Brake Pipe Joint Nuts	18	1.8	13	
Rear Master Cylinder Mounting Bolts	25	2.5	18	L
Brake Pedal Bolt	8.8	0.90	78 in·lb	
Rear Master Cylinder Push Rod Locknut	17	1.7	13	
Rear Axle Nut, First*	220	22.4	162	
Rear Axle Nut, Final*	255	26.0	188	
Rear Brake Disc Mounting Bolts	27	2.8	20	L, S
Rear Caliper Mounting Bolts	27	2.8	20	
Rear Caliper Bleed Valve	16	1.6	12	

Torque and Locking Agent

Fastener	Torque			Remarks
	N·m	kgf·m	ft·lb	
Suspension				
Upper Front Fork Clamp Bolts	20	2.0	15	
Lower Front Fork Clamp Bolts	23	2.3	17	AL
Front Fork Top Plugs	22.5	2.29	16.6	
Piston Rod Nuts	15	1.5	11	
Cylinder Unit	60	6.1	44	L
Rear Shock Absorber Bracket Nuts	34	3.5	25	R
Upper Rear Shock Absorber Nut	34	3.5	25	R
Tie-Rod Nuts	34	3.5	25	R
Lower Rear Shock Absorber Nut	34	3.5	25	R
Spring Preload Adjuster Mounting Nuts	10	1.0	89 in·lb	R
Muffler Body Stay Bolts	25	2.5	18	L
Swingarm Pivot Shaft Nut	108	11.0	79.7	
Rocker Arm Nut	34	3.5	25	R
Steering				
Switch Housing Bolts	0.90	0.09	8 in·lb	
Throttle Case Bolts	3.5	0.36	31 in·lb	
Handlebar Clamp Bolts	25	2.5	18	
Handlebar Positioning Bolts	9.8	1.0	87 in·lb	L
Handlebar Weights	30	3.1	22	EO
Steering Stem Head Nut	78	8.0	58	
Upper Front Fork Clamp Bolts	20	2.0	15	
Steering Damper Mounting Bolts	11	1.1	97 in·lb	L
Steering Stem Nut	20	2.0	15	
Lower Front Fork Clamp Bolts	23	2.3	17	AL
Frame				
Front Fender Mounting Bolts	3.9	0.40	35 in·lb	L
Swingarm Mounting Plate Nut (Upper)	44	4.5	32	R
Footpeg Bracket Bolts	25	2.5	18	L
Rear Master Cylinder Mounting Bolts	25	2.5	18	L
Side Stand Bracket Bolts	49	5.0	36	L
Side Stand Nut	36	3.7	27	R
Side Stand Switch Bolt	8.8	0.90	78 in·lb	L
Heel Guard Bolts	9.8	1.0	87 in·lb	L
Rear Frame Front Bolts	25	2.5	18	
Rear Frame Rear Bolts	27	2.8	20	L
Clamp Screws	1.2	0.12	11 in·lb	
Coolant Reserve Tank Screws	1.2	0.12	11 in·lb	
Middle Fairing Cap Screws	1.2	0.12	11 in·lb	
Middle Fairing Inner Cover Screws	1.2	0.12	11 in·lb	
Rear View Mirror Mounting Bolts	6.9	0.70	61 in·lb	
Windshield Mounting Bolts	0.43	0.044	3.8 in·lb	
Upper Fairing Cover Screws	1.2	0.12	11 in·lb	

Torque and Locking Agent

Fastener	Torque			Remarks
	N·m	kgf·m	ft·lb	
Regulator/Rectifier Bracket Screws	1.2	0.12	11 in·lb	
Front Intake Duct Bolts	7.0	0.71	62 in·lb	
Intake Duct Bracket Screws	1.2	0.12	11 in·lb	
Intake Duct Connecting Bolt	0.50	0.05	4.4 in·lb	
Rear Intake Duct Bolts	6.0	0.61	53 in·lb	
Intake Duct Bracket Bolts	5.0	0.51	44 in·lb	L
Hip Support Cover Bracket Screws	1.2	0.12	11 in·lb	
Electrical System				
City Light Mounting Screws	1.2	0.12	11 in·lb	
Headlight Unit Mounting Screws	1.2	0.12	11 in·lb	
Headlight Cover Screws	1.2	0.12	11 in·lb	
Meter Unit Mounting Screws	1.5	0.15	13 in·lb	
Switch Housing Bolts	0.90	0.09	8 in·lb	
Tail/Brake Light Mounting Screws	1.2	0.12	11 in·lb	
Licence Plate Light Mounting Screws	1.2	0.12	11 in·lb	
Headlight Unit Mounting Bolts	3.0	0.31	27 in·lb	
Camshaft Position Sensor Bolt	10	1.0	89 in·lb	
Spark Plugs	13	1.3	115 in·lb	
Water Temperature Sensor	12	1.2	106 in·lb	
Radiator Fan Bolts	8.4	0.86	74 in·lb	
Knock Sensor Bolt	25	2.5	18	
Crankshaft Sensor Bolts	6.0	0.61	53 in·lb	L
Gear Position Sensor Bolt	10	1.0	89 in·lb	
Timing Rotor Bolt	39	4.0	29	L
Stator Coil Bolts	12	1.2	106 in·lb	L
Alternator Rotor Bolt	155	15.8	114	
Alternator Lead Holding Plate Bolt	10	1.0	89 in·lb	L
Alternator Cover Bolts	10	1.0	89 in·lb	
Oxygen Sensor	25	2.5	18	
Regulator/Rectifier Bracket Screws	1.2	0.12	11 in·lb	
Regulator/Rectifier Mounting Nuts	6.0	0.61	53 in·lb	
Immobilizer Amplifier Bracket Screw	1.2	0.12	11 in·lb	
Engine Ground Terminal Bolt	10	1.0	89 in·lb	
Starter Motor Through Bolts	5.0	0.51	44 in·lb	
Clamp Screws	1.2	0.12	11 in·lb	
Brush Holder Screw	3.8	0.39	34 in·lb	
Starter Motor Mounting Bolts	10	1.0	89 in·lb	
Starter Motor Terminal Locknut	11	1.1	97 in·lb	
Starter Motor Cable Terminal Nut	6.0	0.61	53 in·lb	G
Side Stand Switch Bolt	8.8	0.90	78 in·lb	L

Torque and Locking Agent

The table below, relating tightening torque to thread diameter, lists the basic torque for the bolts and nuts. Use this table for only the bolts and nuts which do not require a specific torque value. All of the values are for use with dry solvent-cleaned threads.

Basic Torque for General Fasteners

Threads Diameter (mm)	Torque		
	N·m	kgf·m	ft·lb
5	3.4 ~ 4.9	0.35 ~ 0.50	30 ~ 43 in·lb
6	5.9 ~ 7.8	0.60 ~ 0.80	52 ~ 69 in·lb
8	14 ~ 19	1.4 ~ 1.9	10 ~ 13.5
10	25 ~ 34	2.6 ~ 3.5	19 ~ 25
12	44 ~ 61	4.5 ~ 6.2	33 ~ 45
14	73 ~ 98	7.4 ~ 10.0	54 ~ 72
16	115 ~ 155	11.5 ~ 16.0	83 ~ 115
18	165 ~ 225	17.0 ~ 23.0	125 ~ 165
20	225 ~ 325	23.0 ~ 33.0	165 ~ 240

Specifications

Item	Standard	Service Limit
Fuel System (DFI)		
Throttle Grip Free Play	2 ~ 3 mm (0.08 ~ 0.12 in.)	– – –
Idle Speed	1 100 ±100 r/min (rpm)	– – –
Throttle Body Vacuum	33.3 ±2.7 kPa (250 ±20 mmHg) @Water temperature 75°C (167°F) or more (at idle speed)	– – –
Air Cleaner Element	Viscous paper element	– – –
Cooling System		
Coolant:		
Type (Recommended)	Permanent type of antifreeze	– – –
Color	Green	– – –
Mixed Ratio	Soft water 50%, coolant 50%	– – –
Freezing Point	–35°C (–31°F)	– – –
Total Amount	2.5 L (2.6 US qt)	– – –
Engine Top End		
Valve Clearance:		
Exhaust	0.33 ~ 0.38 mm (0.0130 ~ 0.0150 in.)	– – –
Intake	0.15 ~ 0.22 mm (0.0059 ~ 0.0086 in.)	– – –
Clutch		
Clutch Fluid:		
Grade	DOT4	– – –
Clutch Lever Free Play	Non-adjustable	– – –
Engine Lubrication System		
Engine Oil:		
Type	API SG, SH, SJ, SL or SM with JASO MA, MA1 or MA2	– – –
Viscosity	SAE 10W-40	– – –
Capacity	3.9 L (4.1 US qt) (When filter is not removed)	– – –
	4.4 L (4.7 US qt) (When filter is removed)	– – –
	5.0 L (5.3 US qt) (When engine is completely dry)	– – –
Level	Between upper and lower level lines (Wait several minutes after idling or running)	– – –
Wheels/Tires		
Tread Depth:		
Front	3.6 mm (0.14 in.)	1 mm (0.04 in.) (AT, CH, DE) 1.6 mm (0.06 in.)
Rear	5.0 mm (0.20 in.)	Up to 130 km/h (80 mph): 2 mm (0.08 in.) Over 130 km/h (80 mph): 3 mm (0.12 in.)

Specifications

Item	Standard	Service Limit
Air Pressure (when Cold):		
Front	Up to 105 kg (231 lb) load: 250 kPa (2.50 kgf/cm², 36 psi)	– – –
Rear	Up to 105 kg (231 lb) load: 290 kPa (2.90 kgf/cm², 42 psi)	– – –
Final Drive		
Drive Chain Slack	25 ~ 35 mm (1.0 ~ 1.4 in.)	– – –
Drive Chain Wear (20-link Length)	317.5 ~ 318.2 mm (12.50 ~ 12.53 in.)	319 mm (12.6 in.)
Standard Chain:		
Make	ENUMA	– – –
Type	EK525RMXZ/3D	– – –
Link	118 links	– – –
Brakes		
Brake Fluid:		
Grade	DOT4	– – –
Brake Pad Lining Thickness:		
Front	3.7 mm (0.15 in.)	1 mm (0.04 in.)
Rear	6.95 mm (0.27 in.)*	4.5 mm (0.18 in.)*
Brake Light Timing:		
Front	Pulled ON	– – –
Rear	ON after about 10 mm (0.39 in.) of pedal travel	– – –
Electrical System		
Spark Plug:		
Type	NGK SILMAR9B9	– – –
Gap	0.8 ~ 0.9 mm (0.031 ~ 0.035 in.)	– – –
Supercharger		
Supercharger Impeller Axial Play	– – –	0.5 mm (0.02 in.)

*: Thickness of pad lining and back plate

Special Tools

Inside Circlip Pliers:
57001-143

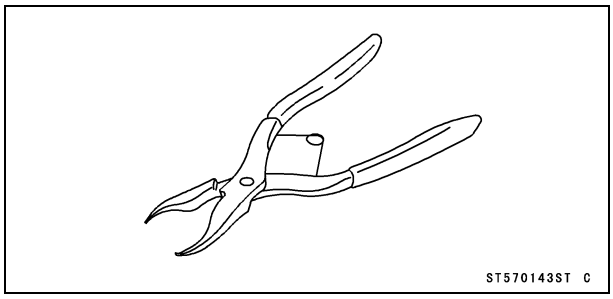

Extension Tube:
57001-1578

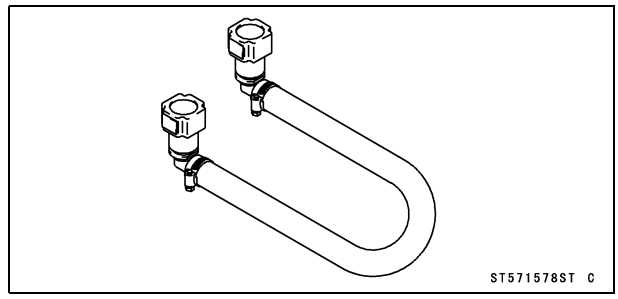

Steering Stem Nut Wrench:
57001-1100

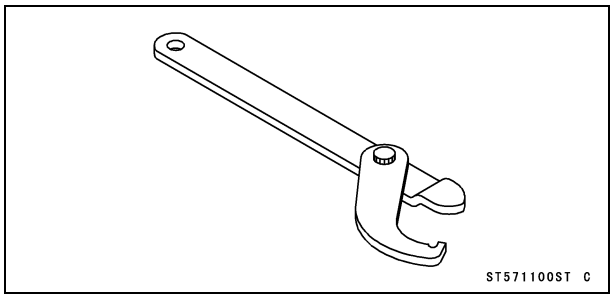

Dial Gauge Holder Plate:
57001-1834

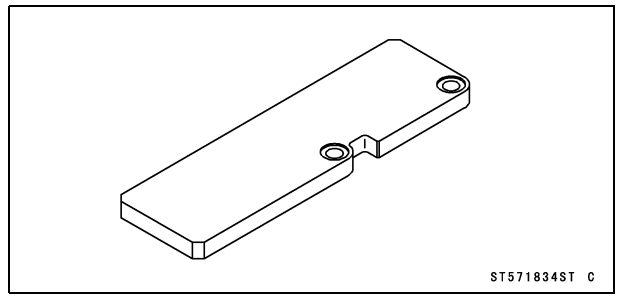

Oil Filter Wrench:
57001-1212

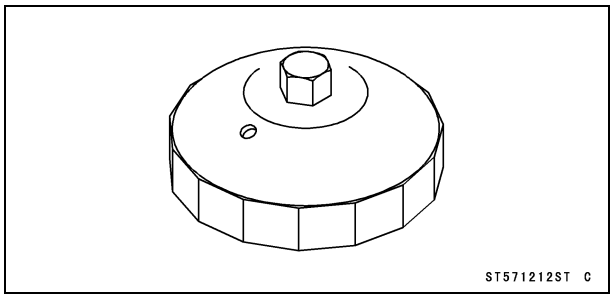

Brake Caliper Piston Pliers (ϕ16 ~ ϕ26):
57001-1861

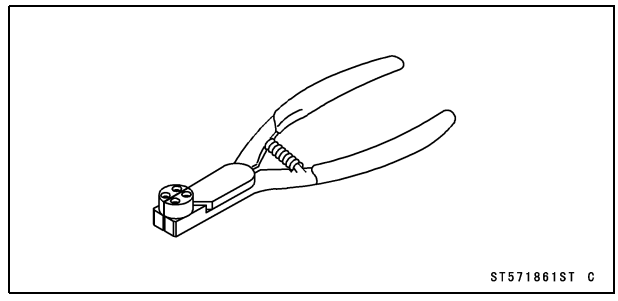

Vacuum Gauge:
57001-1369

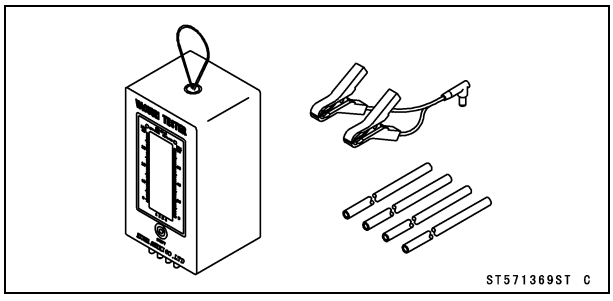

Periodic Maintenance Procedures

Fuel System (DFI)

Air Cleaner Element Replacement

NOTE

○*In dusty areas, the element should be replaced more frequently than the recommended interval.*

⚠ WARNING

If dirt or dust is allowed to pass through into the throttle body assy, the throttle may become stuck, possibly causing accident. Replace the air cleaner element according to the maintenance chart.

NOTICE

If dirt gets through into the engine, excessive engine wear and possibly engine damage will occur.

● Remove:
Rear Intake Duct (see Intake Duct Removal in the Frame chapter)
Air Cleaner Housing Cover Bolts [A]
Air Cleaner Housing Cover [B]

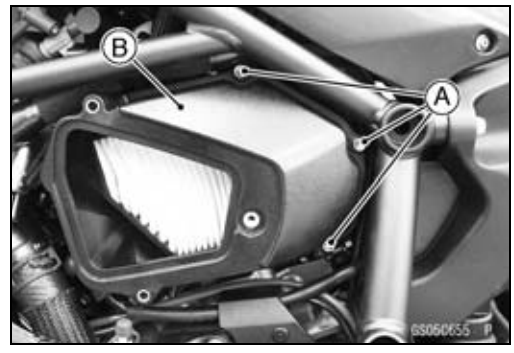

● Discard the air cleaner element [A].



● Replace the O-rings [A] with new ones.
● Install:
New Element [B]
Air Cleaner Housing Cover [C]
● Tighten:

Torque - Air Cleaner Housing Cover Bolts: 6.0 N·m (0.61 kgf·m, 53 in·lb)

● Install the removed parts (see appropriate chapters).

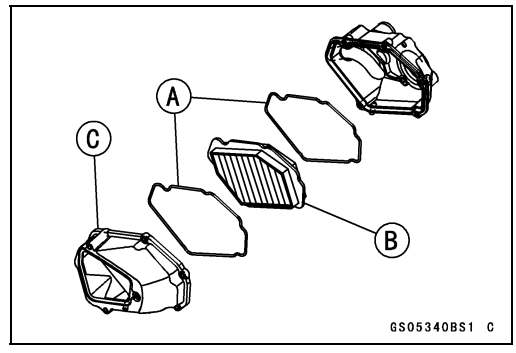

Periodic Maintenance Procedures

Idle Speed Inspection

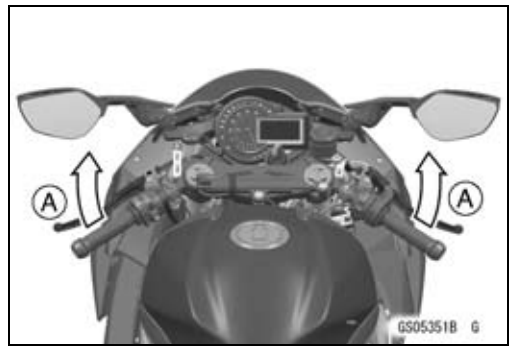

- Start the engine and warm it up thoroughly.
- With the engine idling, turn the handlebars to both sides [A].

★If handlebar movement changes the idle speed, the throttle cables may be improperly adjusted or incorrectly routed, or damaged. Be sure to correct any of these conditions before riding (see Throttle Control System Inspection and Cable, Wire, and Hose Routing section in the Appendix chapter).

⚠ WARNING

Operation with improperly adjusted, incorrectly routed or damaged cables could result in an unsafe riding condition. Follow the service manual to be make sure to correct any of these conditions.

- Check the idle speed.

Idle Speed
Standard: 1 100 ±100 r/min (rpm)

Idle Speed Adjustment

NOTE

○*This motorcycle is equipped with the idle speed control system. The idle speed is adjusted automatically at the specified value (1 100 r/min (rpm)) by the idle speed control system. Therefore, it is not necessary to adjust the idle speed normally.*

Throttle Control System Inspection

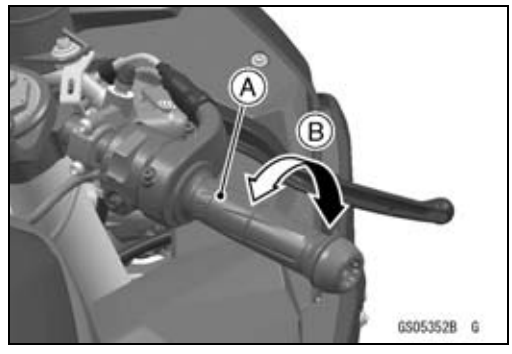

- Check that the throttle grip [A] moves smoothly from full open to close, and the throttle closes quickly and completely by the return spring in all steering positions.

★If the throttle grip does not return properly, check the throttle cable routing, grip free play, and cable damage. Then lubricate the throttle cable.

- Check the throttle grip free play [B].

Throttle Grip Free Play
Standard: 2 ~ 3 mm (0.08 ~ 0.12 in.)

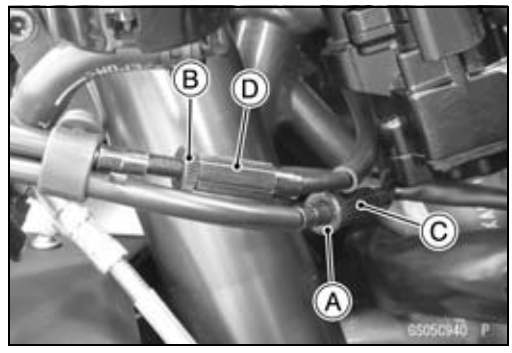

★If the free play is incorrect, adjust the throttle cable as follows.

- Loosen the locknuts [A] [B].
- Screw both throttle cable adjusters [C] [D] to give the throttle grip plenty of play.
- Turn the decelerator cable adjuster [C] until there is no play when the throttle grip play completely closed.
- Tighten the locknut [A].
- Turn the accelerator cable adjuster [D] until 2 ~ 3 mm (0.08 ~ 0.12 in.) of throttle grip play is obtained.
- Tighten the locknut [B].

★If the free play can not be adjusted with the adjusters, replace the cable.

Periodic Maintenance Procedures

Engine Vacuum Synchronization Inspection

⚠ WARNING

The air intake chamber can become extremely hot during normal operation and cause severe burns. Do not remove the air intake chamber while it is hot.

NOTE

○*These procedures are explained on the assumption that the intake and exhaust systems of the engine are in good condition.*

- Situate the motorcycle so that it is vertical.
- Remove:
  Air Intake Chamber (see Air Intake Chamber Removal in the Fuel System (DFI) chapter)

- Pull off the rubber caps [A] from the fittings of each throttle body.

★Remove the throttle body assy temporarily if the operation is difficult (see Throttle Body Assy Removal in the Fuel System (DFI) chapter).



- Connect a vacuum gauge and hoses [A] (Special Tool: 57001-1369) to the fittings on the throttle body.

Special Tool - Vacuum Gauge: 57001-1369



- Connect a highly accurate tachometer lead [A] to one of the stick coil primary leads.

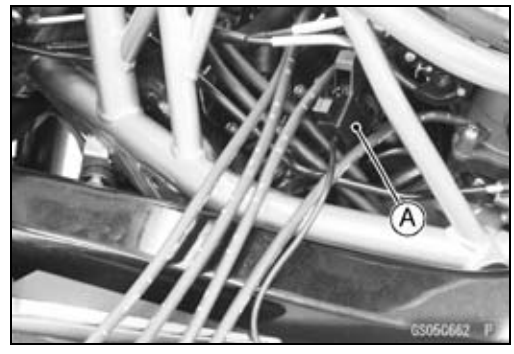

Periodic Maintenance Procedures

- Connect the following parts temporarily.
  Fuel Pump Lead Connector
  Extension Tube [A]

  Special Tool - Extension Tube: 57001-1578

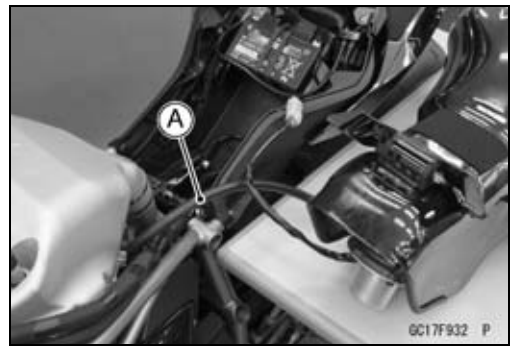

- Install the air intake chamber (see Air Intake Chamber Installation in the Fuel System (DFI) chapter).
- Plug the air switching valve hose end [A].



- Start the engine and warm it up thoroughly.
- Check the idle speed, using a highly accurate tachometer [A].

  Idle Speed
  Standard: 1 100 ±100 r/min (rpm)

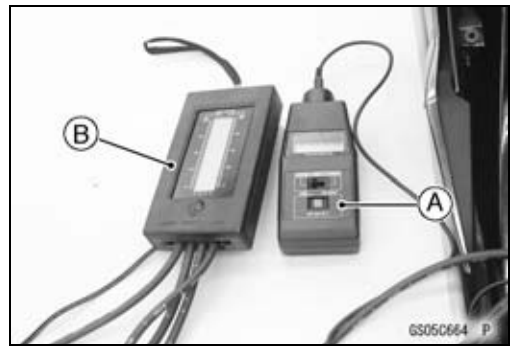

NOTICE
Do not measure the idle speed by the tachometer of the meter unit.

- While idling the engine, inspect the throttle body vacuum, using the vacuum gauge [B].

  Throttle Body Vacuum
  Standard: 33.3 ±2.7 kPa (250 ±20 mmHg) @Water temperature 75°C (167°F) or more (at idle speed)

★If any vacuum is not within specifications, check the throttle body assy holder (see Throttle Body Assy Holder Removal in the Engine Top End chapter).
★If there is any damage, replace the throttle body assy holder.
- Remove the air intake chamber (see Air Intake Chamber Removal in the Fuel System (DFI) chapter).
- Remove the vacuum gauge hoses and install the rubber caps on the original position.
- Install the removed parts (see appropriate chapters).

Periodic Maintenance Procedures

Fuel System Inspection

Fuel Hose Inspection (fuel leak, damage, installation condition)

○If the motorcycle is not properly handled, the high pressure inside the fuel line can cause fuel to leak [A] or the hose to burst. Remove the fuel tank (see Fuel Tank Removal in the Fuel System (DFI) chapter) and check the fuel hose.

★Replace the fuel hose if any fraying, cracks [B] or bulges [C] are noticed.

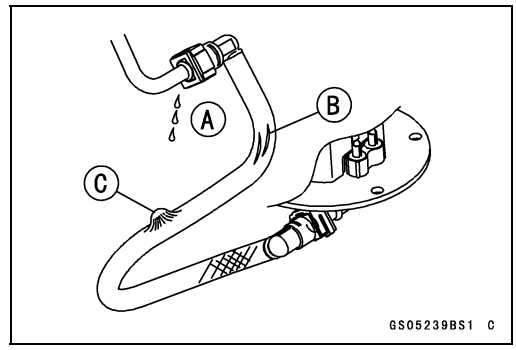

● Check that the fuel hose is routed according to Cable, Wire, and Hose Routing section in the Appendix chapter.

★Replace the hose if it has been sharply bent or kinked.

Hose Joints [A]
Fuel Hose [B]

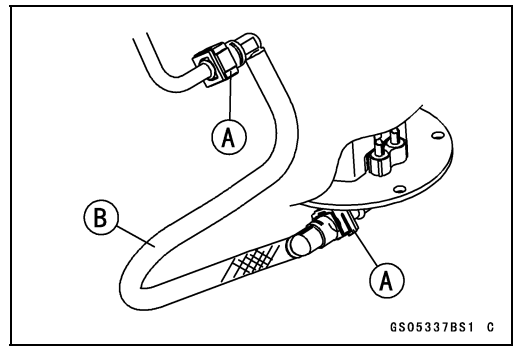

● Check that the fuel hose joints are securely connected.

○Push and pull [A] the fuel hose joint [B] back and forth more than two times, and make sure it is locked.

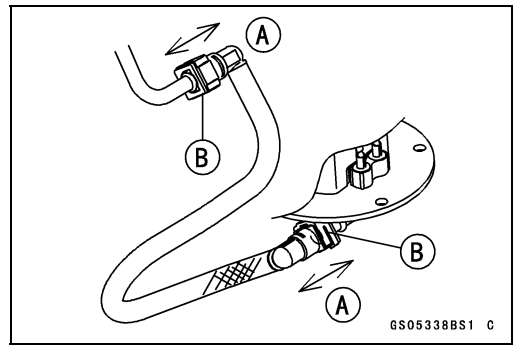

⚠ WARNING

Leaking fuel can cause a fire or explosion resulting in serious burns. Make sure the hose joint is installed correctly on the delivery pipe by sliding the joint.

★If it does not locked, reinstall the hose joint.

Fuel Filter Replacement

⚠ WARNING

Gasoline is extremely flammable and can be explosive under certain conditions, creating the potential for serious burns. Make sure the area is well ventilated and free from any source of flame or sparks; this includes any appliance with a pilot light. Do not smoke. Turn the ignition switch off. Disconnect the battery (-) terminal. To avoid fuel spills, draw it from the tank when the engine is cold. Be prepared for fuel spillage; any spilled fuel must be completely wiped up immediately.

NOTICE

Never drop the fuel pump especially on a hard surface. Such a shock to the pump can damage it.

Periodic Maintenance Procedures

● Remove:
Fuel Pump (see Fuel Pump Removal in the Fuel System (DFI) chapter)
Fuel Pump Assembly Screws [A]
Lead Terminal [B]
Clip Nuts [C]

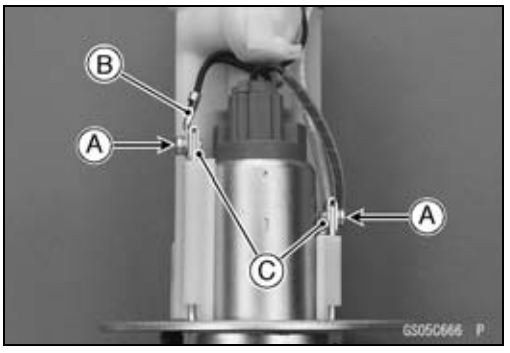

● Remove:
Fuel Pump Terminal Nuts [A] and Spring Washers
Lead Terminal (Blue) [B]
Lead Terminal (White) [C]

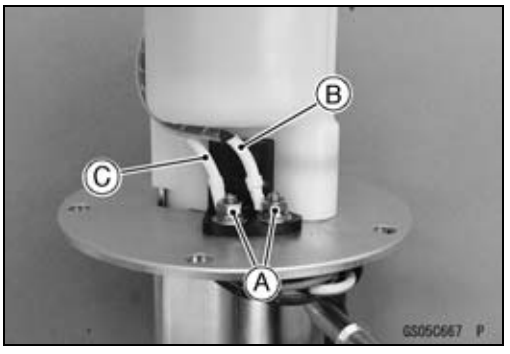

● Using the flat tip screwdriver [A], remove the fuel pump body [B] from the case [C].

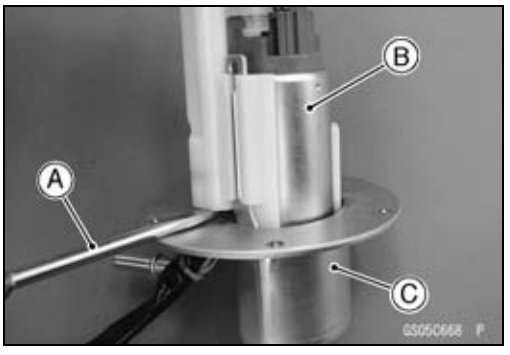

● Clear the hooks [A], and remove the fitting [B].
● Remove the rubber cover [C].

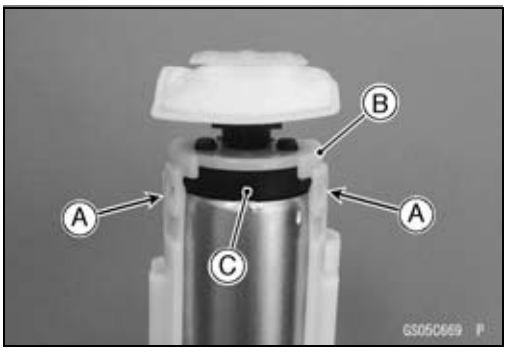

● Wrap the fuel filter [A] with the clean cloth [B], and remove the fuel filter.

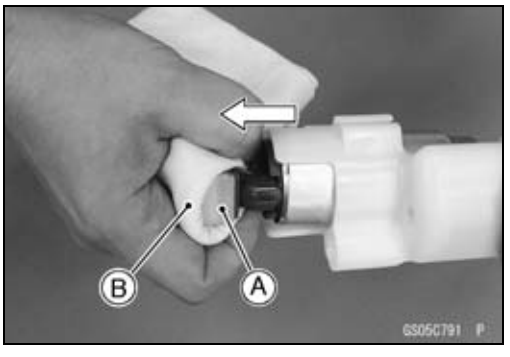

Periodic Maintenance Procedures

- Replace the fuel filter [A] with a new one.

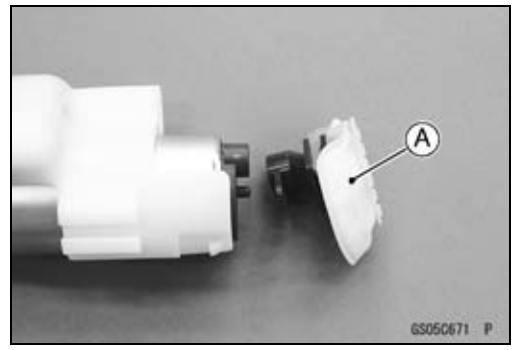

- Replace the following parts with new ones and install the removed parts in the reverse procedure.
  O-ring [A]
  Spring Washers [B]
  Fuel Pump Terminal Nuts [C]
  Fuel Pump Assembly Screws [D]

Torque - Fuel Pump Terminal Nuts: 0.98 N·m (0.10 kgf·m, 8.7 in·lb)
Fuel Pump Assembly Screws: 0.98 N·m (0.10 kgf·m, 8.7 in·lb)

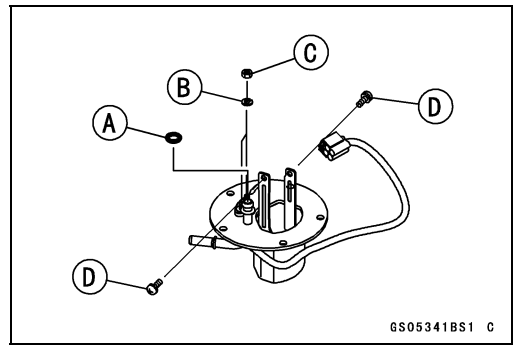

Fuel Pump Replacement

- Replace the fuel pump [A] with a new one (see Fuel Pump Removal in the Fuel System (DFI) chapter).

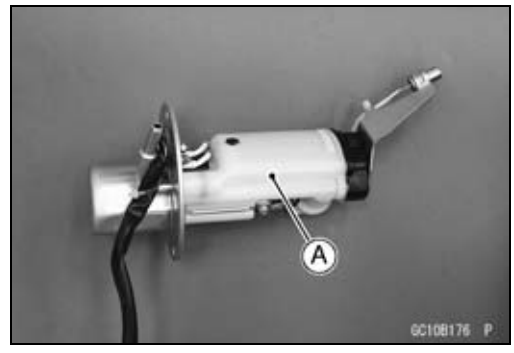

Fuel Hose Replacement

- Remove the air intake chamber (see Air Intake Chamber Removal in the Fuel System (DFI) chapter).
- Be sure to place a piece of cloth around the fuel hose joint.
- Wipe off the dirt of the surface [A] around the connection using a cloth or a soft brush.

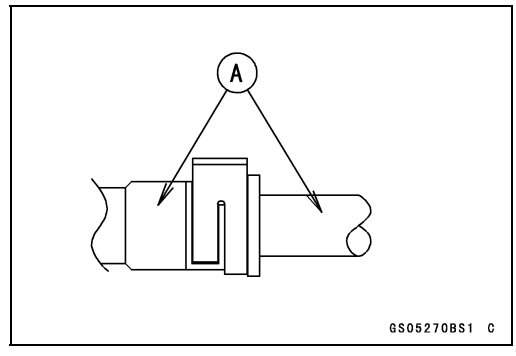

Periodic Maintenance Procedures

When removing with flat tip screwdriver

- Insert the flat tip screwdriver [A] into slit on the joint lock [B].
- Turn the driver to disconnect the joint lock.

When removing with fingers

- Open and push up [C] the joint lock with your fingers.

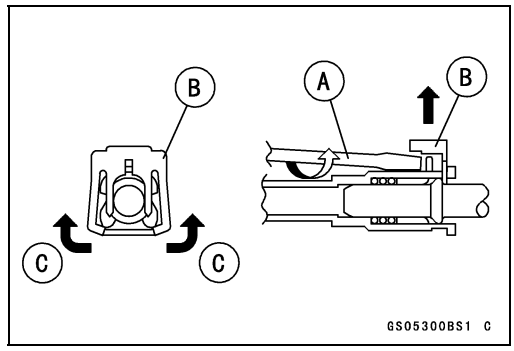

NOTICE

Prying or excessively widening the joint lock ends for fuel hose removal will permanently deform the joint lock, resulting in a loose or incomplete lock that may allow fuel to leak and create the potential for a fire explosion. To prevent fire or explosion from a damaged joint lock, do not pry or excessively widen the joint lock ends when removing the fuel hose. The joint lock has a retaining edge that locks around the housing.

- Pull [A] the fuel hose joint [B] out of the outlet pipe.

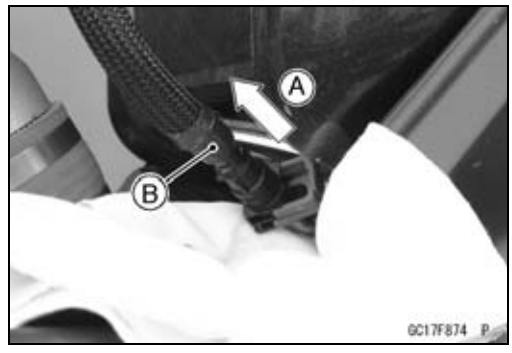

⚠ WARNING

Fuel is flammable and explosive under certain conditions and can cause severe burns. Be prepared for fuel spillage; any spilled fuel must be completely wiped up immediately. When the fuel hose is disconnected, fuel spills out from the hose and the pipe. Cover the hose connection with a clean shop towel to prevent fuel spillage.

- Clean the delivery pipe.
- Cover the delivery pipe with the vinyl bag to keep it clean.
- Remove the vinyl bag on the pipe.
- Check that there are no flaws, burrs, and adhesion of foreign materials on the delivery pipe [A].

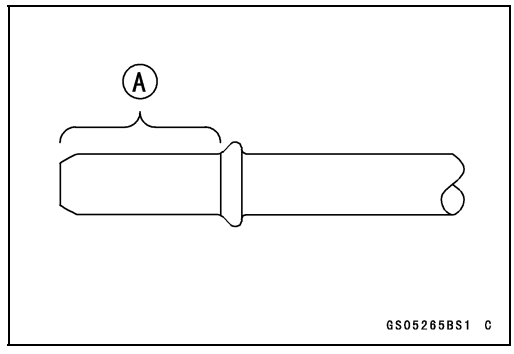

- Replace the fuel hose with a new one.
- Run the fuel hose correctly (see Cable, Wire, and Hose Routing section in the Appendix chapter).
- Insert the fuel hose joint [A] straight onto the outlet pipe until the hose joint clicks.
- Push [B] the joint lock [C].

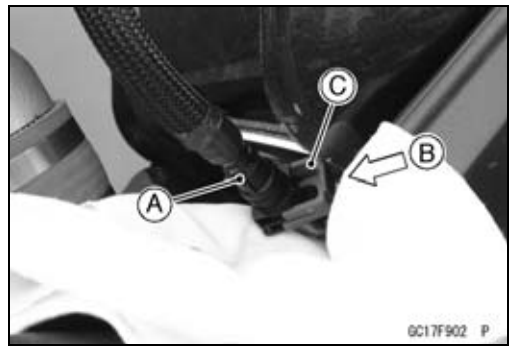

Periodic Maintenance Procedures

● Push and pull [A] the fuel hose joint [B] back and forth more than two times and make sure it is locked and does not come off.

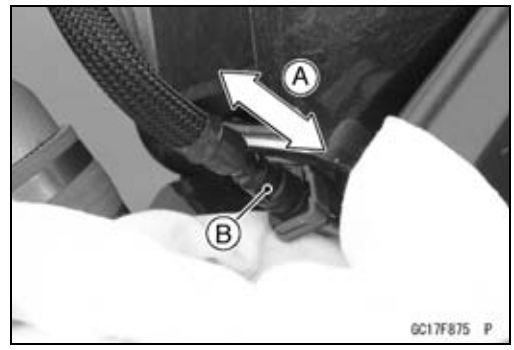

⚠ WARNING

Leaking fuel can cause a fire or explosion resulting in severe burns. Make sure the fuel hose joint is installed correctly on the delivery pipe and that it doesn't leak.

★If it comes off, reinstall the hose joint.
● Install the removed parts (see appropriate chapters).
● Start the engine and check the fuel hose for leaks.

Evaporative Emission Control System Inspection (Other than US and CA Models)

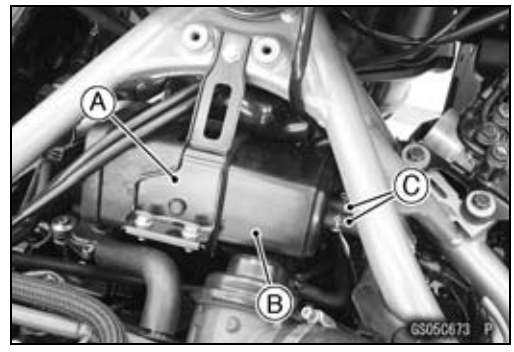

● Inspect the canister as follows.
○Remove the fuel tank (see Fuel Tank Removal in the Fuel System (DFI) chapter).
○Remove the bracket [A].
○Remove the canister [B].
○Slide the clamps, and disconnect the hoses [C].
○Visually inspect the canister for cracks or other damage.
★If the canister has any cracks or bad damage, replace it with a new one.

NOTE

○*The canister is designed to work well through the motorcycle's life without any maintenance if it is used under normal conditions.*

● Inspect the purge valve (see Purge Valve Inspection in the Self-Diagnosis System chapter).
○Check that the hoses are securely connected and clips are in position.
○Replace any kinked, deteriorated or damaged hoses.
○Run the hoses according to Cable, Wire, and Hose Routing section in the Appendix chapter.
○When installing the hoses, avoid sharp bending, kinking, flattening or twisting, and run the hoses with a minimum of bending so that the emission flow will not be obstructed.

Cooling System

Coolant Level Inspection

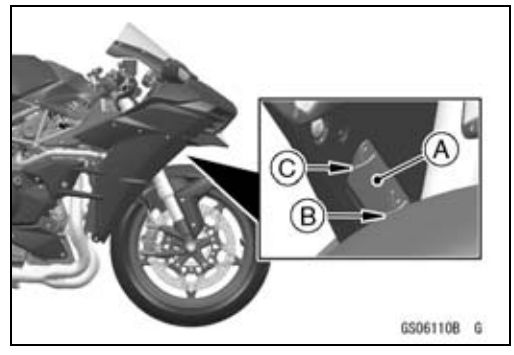

NOTE

○*Check the level when the engine is cold (room or ambient temperature).*

● Check the coolant level in the reserve tank [A] with the motorcycle held perpendicular (Do not use the side stand).
★If the coolant level is lower than the "L" level line [B], unscrew the reserve tank cap and add coolant to the "F" level line [C].
"L": Low
"F": Full

Periodic Maintenance Procedures

○To remove the reserve tank cap [A], remove the right inner cover (see Inner Cover Removal in the Frame chapter).

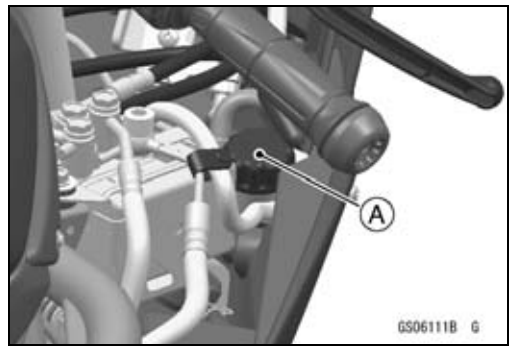

NOTICE

For refilling, add the specified mixture of coolant and soft water. Adding water alone dilutes the coolant and degrades its anticorrosion properties. The diluted coolant can attack the aluminum engine parts. In an emergency, soft water alone can be added. But the diluted coolant must be returned to the correct mixture ratio within a few days.
If coolant must be added often or the reservoir tank has run completely dry, there is probably leakage in the cooling system. Check the system for leaks.
Coolant ruins painted surfaces. Immediately wash away any coolant that spills on the frame, engine, wheels or other painted parts.

Cooling System Inspection

Water Hose and Pipe Inspection (coolant leak, damage, installation condition)

○The high pressure inside the water hose can cause coolant to leak [A] or the hose to burst if the line is not properly maintained.

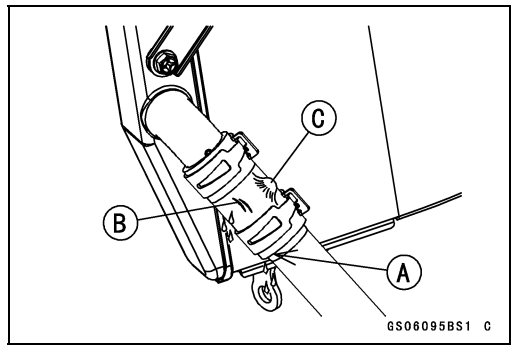

● Visually inspect the hoses for signs of deterioration. Squeeze the hoses. A hose should not be hard and brittle, nor should it be soft or swollen.

★Replace the hose if any fraying, cracks [B] or bulges [C] are noticed.

● Check that the hoses are securely connected and clamps are installed correctly.

Coolant Change

⚠ WARNING

Coolant can be extremely hot and cause severe burns, is toxic and very slippery. Do not remove the radiator cap or attempt to change the coolant when the engine is hot; allow it cool completely. Immediately wipe any spilled coolant from tires, frame, engine or other painted parts. Do not ingest coolant.

● Remove:
Right Middle Fairing (see Middle Fairing Removal in the Frame chapter)
Radiator Cap [A]

○Remove the radiator cap in two steps. First turn the cap counterclockwise to the first stop. Then push and turn it further in the same direction and remove the cap.

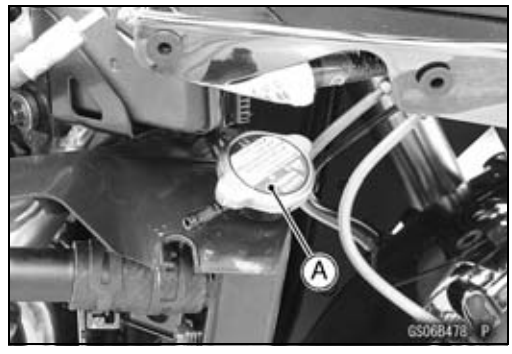

Periodic Maintenance Procedures

- Place a container under the drain bolt [A] of the water pump cover.
- Drain the coolant from the radiator by removing the drain bolt.



- Remove the cap [A] of the reserve tank on the right middle fairing.
- Pour the coolant into a container.

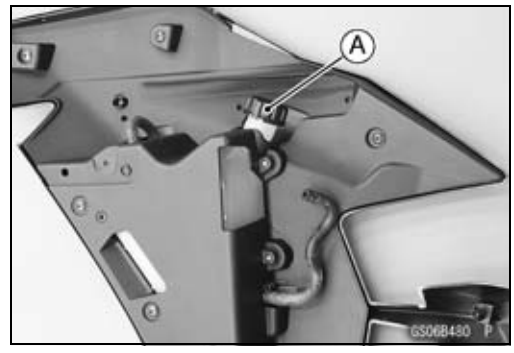

- When filling the coolant, choose a suitable mixture ratio by referring to the coolant manufacturer's directions.

NOTICE
Soft or distilled water must be used with the antifreeze in the cooling system. **If hard water is used in the system, it causes scales accumulation in the water passages, and considerably reduces the efficiency of the cooling system.**

Water and Coolant Mixture Ratio (Recommended)

Soft Water:	**50%**
Coolant:	**50%**
Freezing Point:	**–35°C (–31°F)**
Total Amount:	**2.5 L (2.6 US qt)**

- Fill the radiator up to the filler neck [A] with coolant.

NOTE

○*Pour in the coolant slowly so that it can expel the air from the engine and radiator.*

- Check the cooling system for leaks.
- Tap the water hoses to force any air bubbles caught inside.
- Fill the radiator up to the filler neck with coolant.
- Install the radiator cap.

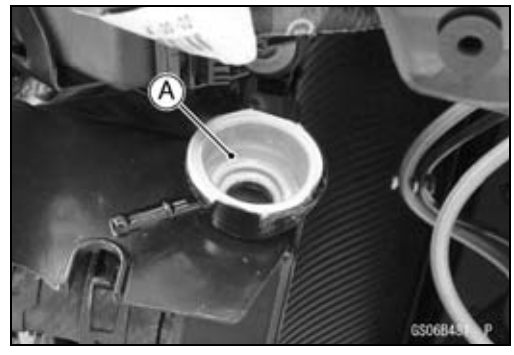

Periodic Maintenance Procedures

- Install the right middle fairing (see Middle Fairing Installation in the Frame chapter).
- Fill the reserve tank up to the “F” (full) level line [A] with coolant and install the reserve tank cap.
- Start the engine, warm it up thoroughly until the radiator fans turn on and then stop the engine.
- Check the coolant level in the reserve tank after the engine cools down.

★If the coolant level is lower than the “L” (low) level line [B], add coolant to the “F” level line.

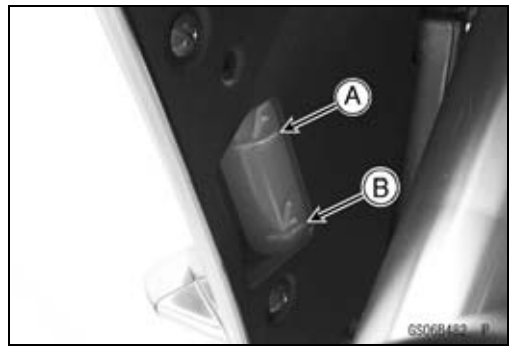

NOTICE
Do not add more coolant above the “F” level line.

Periodic Maintenance Procedures

Water Hose and O-ring Replacement

- Drain the coolant (see Coolant Change).
- Remove:
  Middle Fairings (see Middle Fairing Removal in the Frame chapter)
  Thermostat Housing Cover [A] (see Thermostat Removal in the Cooling System chapter)
  Water Hose Fitting Cover [B] (see Thermostat Removal in the Cooling System chapter)
  Water Pump Housing [C] (see Water Pump Removal in the Cooling System chapter)
- Replace the hoses [D] and O-rings [E] with new ones.
- Apply grease or soap and water solution to the new O -rings.
- Run the hoses according to Cable, Wire, and Hose Routing section in the Appendix chapter.
- Install the removed parts (see appropriate chapters).
- Fill the coolant (see Coolant Change).
- Check the cooling system for leaks.

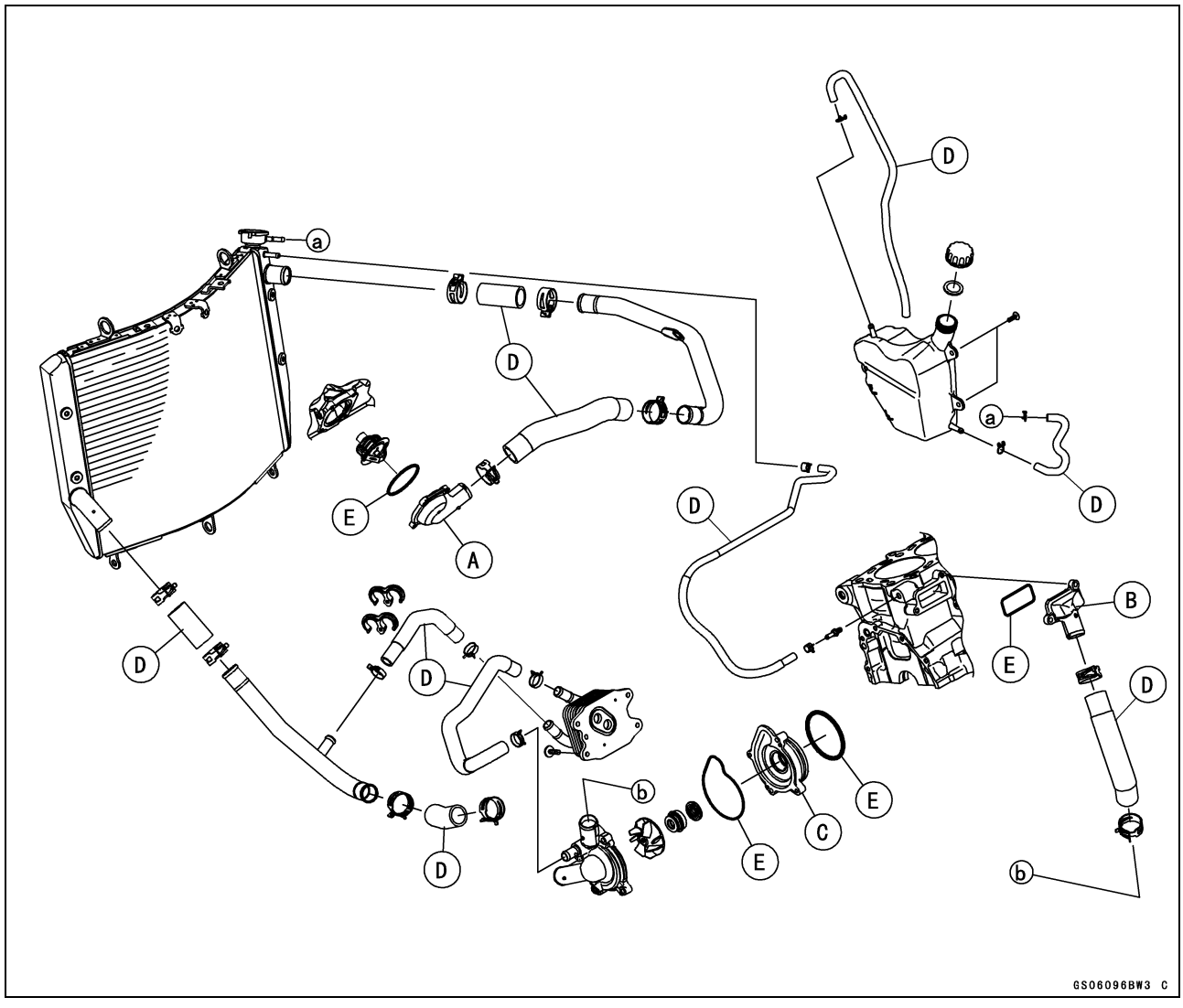

Periodic Maintenance Procedures

Engine Top End

Valve Clearance Inspection

NOTE

○*Valve clearance must be checked and adjusted when the engine is cold (at room temperature).*

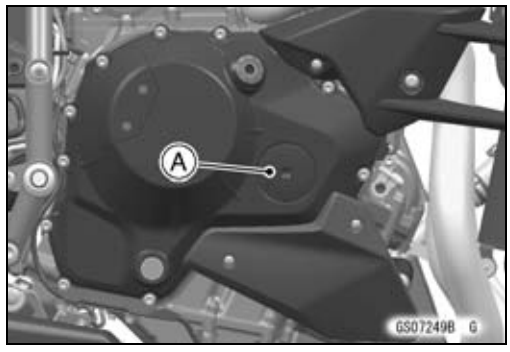

● Remove:
Cylinder Head Cover (see Cylinder Head Cover Removal in the Engine Top End chapter)
Crankshaft Timing Plug [A]

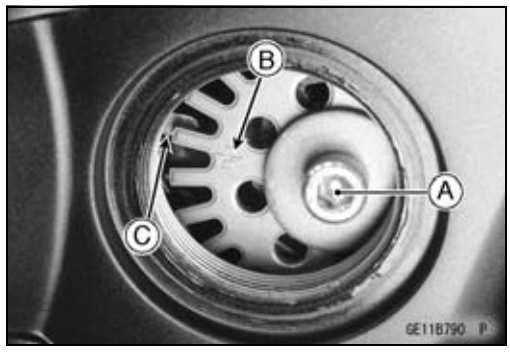

● Using a wrench on the timing rotor bolt [A], turn the crankshaft clockwise until the line [B] (TDC mark for #1,4 pistons) on the timing rotor is aligned with the mating surface [C] of the crankcase.

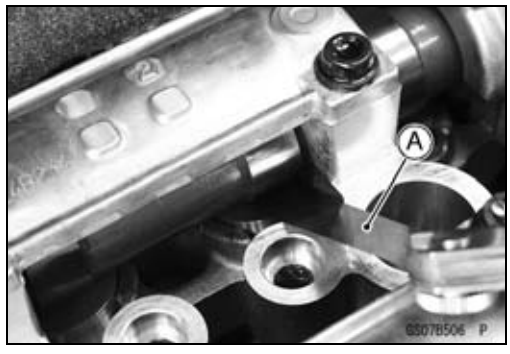

● Using a thickness gauge [A], measure the valve clearance between the cam and the valve lifter.

Valve Clearance
Standard:
Exhaust 0.33 ~ 0.38 mm (0.0130 ~ 0.0150 in.)
Intake 0.15 ~ 0.22 mm (0.0059 ~ 0.0086 in.)

NOTE

○*Thickness gauge is horizontally inserted on the valve lifter.*

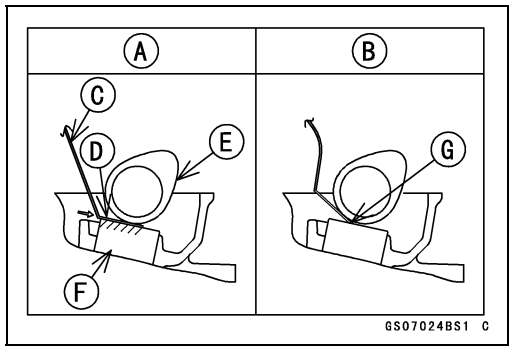

Appropriateness [A]
Inadequacy [B]
Thickness Gauge [C]
Horizontally Inserts [D]
Cam [E]
Valve Lifter [F]
Hits the Valve Lifter Ahead [G]

Periodic Maintenance Procedures

○**When positioning #1 piston TDC at the end of the compression stroke:**
Intake Valve Clearance of #1 and #3 Cylinders
Exhaust Valve Clearance of #1 and #2 Cylinders
Measuring Valve [A]

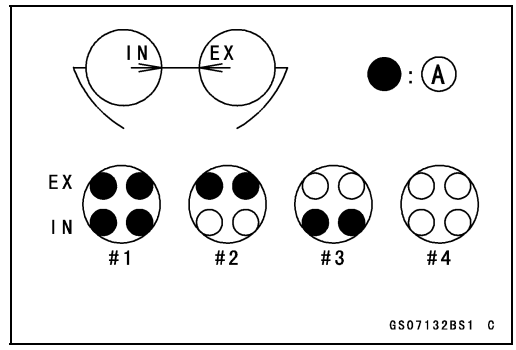

○**When positioning #4 piston TDC at the end of the compression stroke:**
Intake Valve Clearance of #2 and #4 Cylinders
Exhaust Valve Clearance of #3 and #4 Cylinders
Measuring Valve [A]

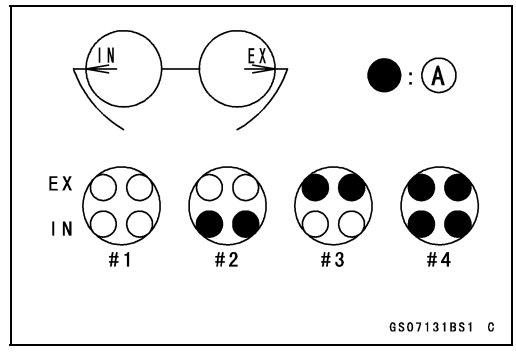

★If the valve clearance is not within the specified range, first record the clearance, and then adjust it.

Valve Clearance Adjustment

● To change the valve clearance, remove the camshaft chain tensioner, camshafts and valve lifters. Replace the shim with one of a different thickness.

NOTE

○*Keep the valve lifters and shims so that they can be reinstalled in their original positions.*

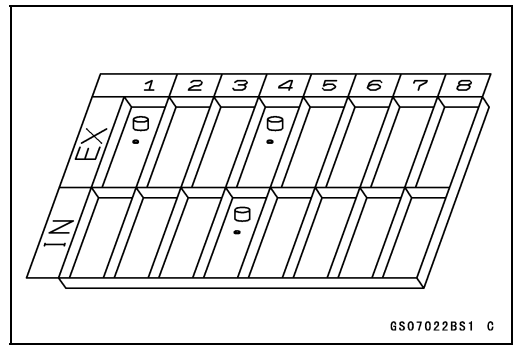

● Clean the shim to remove any dust or oil.
● Measure the thickness of the removed shim [A].
● Select a new shim thickness calculation as follows.
a + b – c = d
[a] Present Shim Thickness
[b] Measured Valve Clearance
[c] Specified Valve Clearance (Mean Value = 0.355 mm (Exhaust), 0.185 mm (Intake))
[d] Replace Shim Thickness

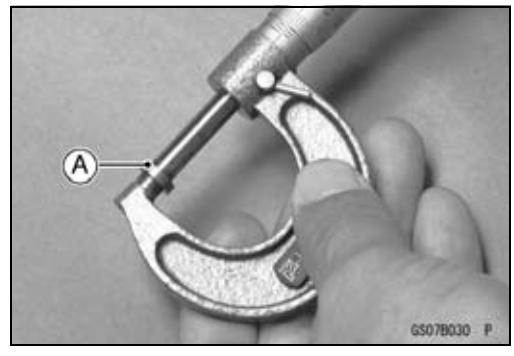

Example (Intake):
1.350 + 0.31 – 0.185 = 1.475 mm

○Exchange the shim for the 1.475 size shim.

NOTICE
Don't use the shims for another models. Use the specified shim for this model surely.

Periodic Maintenance Procedures

NOTICE
Be sure to remeasure the clearance after selecting a shim. The clearance can be out of the specified range because of the shim tolerance.

○If there is no valve clearance, use a shim that is a few sizes smaller, and remeasure the valve clearance.

- When installing the shim, face the marked side toward the valve lifter. At this time, apply engine oil to the shim or the valve lifter to keep the shim in place during camshaft installation.

NOTICE
Do not put shim stock under the shim. This may cause the shim to pop out at high rpm, causing extensive engine damage. **Do not grind the shim. This may cause it to fracture, causing extensive engine damage.**

- Apply engine oil to the valve lifter surface and install the lifter.
- Install the camshaft (see Camshaft Installation in the Engine Top End chapter).
- Recheck the valve clearance and readjust if necessary.
- Install the removed parts (see appropriate chapters).

Periodic Maintenance Procedures

Adjustment Shims

Thickness (mm)	Part Number	Mark
1.300	92180-0108	130
1.325	92180-0109	132
1.350	92180-0110	135
1.375	92180-0865	1375
1.388	92180-0866	1388
1.400	92180-0867	1400
1.413	92180-0868	1413
1.425	92180-0869	1425
1.438	92180-0870	1438
1.450	92180-0871	1450
1.463	92180-0872	1463
1.475	92180-0873	1475
1.488	92180-0874	1488
1.500	92180-0875	1500
1.513	92180-0876	1513
1.525	92180-0877	1525
1.538	92180-0878	1538
1.550	92180-0879	1550
1.563	92180-0880	1563
1.575	92180-0881	1575
1.588	92180-0882	1588
1.600	92180-0883	1600
1.613	92180-0884	1613
1.625	92180-0885	1625
1.638	92180-0886	1638
1.650	92180-0887	1650
1.663	92180-0888	1663
1.675	92180-0889	1675
1.688	92180-0890	1688
1.700	92180-0891	1700
1.713	92180-0892	1713
1.725	92180-0893	1725
1.738	92180-0894	1738
1.750	92180-0895	1750
1.763	92180-0896	1763
1.775	92180-0897	1775
1.788	92180-0898	1788
1.800	92180-0899	1800
1.813	92180-0900	1813
1.825	92180-0901	1825
1.838	92180-0902	1838

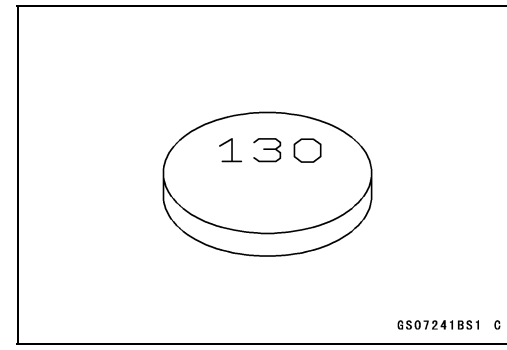

Periodic Maintenance Procedures

Adjustment Shims

Thickness (mm)	Part Number	Mark
1.850	92180-0903	1850
1.863	92180-0904	1863
1.875	92180-0905	1875
1.888	92180-0906	1888
1.900	92180-0907	1900
1.913	92180-0908	1913
1.925	92180-0909	1925
1.938	92180-0910	1938
1.950	92180-0911	1950
1.963	92180-0912	1963
1.975	92180-0913	1975
1.988	92180-0914	1988
2.000	92180-0915	2000
2.013	92180-0916	2013
2.025	92180-0917	2025
2.038	92180-0918	2038
2.050	92180-0919	2050
2.063	92180-0920	2063
2.075	92180-0921	2075
2.088	92180-0922	2088
2.100	92180-0923	2100
2.113	92180-0924	2113
2.125	92180-0925	2125
2.138	92180-0926	2138
2.150	92180-0927	2150
2.163	92180-0928	2163
2.175	92180-0929	2175
2.188	92180-0930	2188
2.200	92180-0931	2200
2.213	92180-0932	2213
2.225	92180-0933	2225
2.238	92180-0934	2238
2.250	92180-0935	2250
2.263	92180-0936	2263
2.275	92180-0937	2275
2.288	92180-0938	2288
2.300	92180-0939	2300

Periodic Maintenance Procedures

Air Suction System Damage Inspection

- Remove:
  Left Inner Cover (see Inner Cover Removal in the Frame chapter)
  Left Fuel Tank Cover (see Fuel Tank Cover Removal in the Frame chapter)
- Disconnect:
  Air Switching Valve Hose [A]

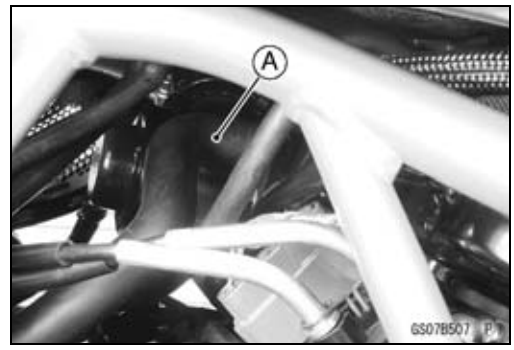

- Start the engine and run it at idle speed.
- Plug the air switching valve hose end [A] with your finger and feel vacuum pulsing in the hose.

★If there is no vacuum pulsation, check the hose line for leak. If there is no leak, check the air switching valve (see Air Switching Valve Unit Test in the Electrical System chapter) or air suction valves (see Air Suction Valve Inspection in the Engine Top End chapter).



Clutch

Clutch System Inspection

Clutch Fluid Leak Inspection

- Apply the clutch lever and inspect the clutch fluid leak from the clutch hose [A], pipe [B] and fittings.

★If the clutch fluid leaked from any position, inspect or replace the problem part.

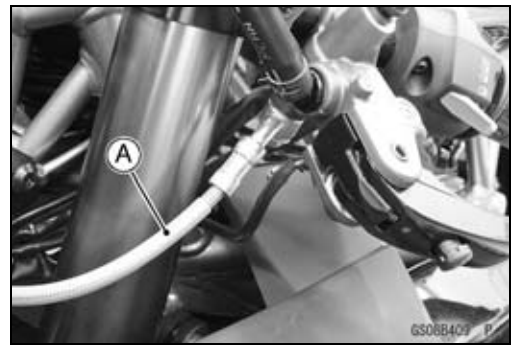

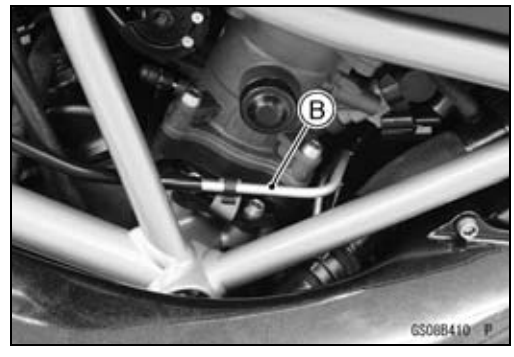

Periodic Maintenance Procedures

Clutch Hose Damage and Installation Condition Inspection

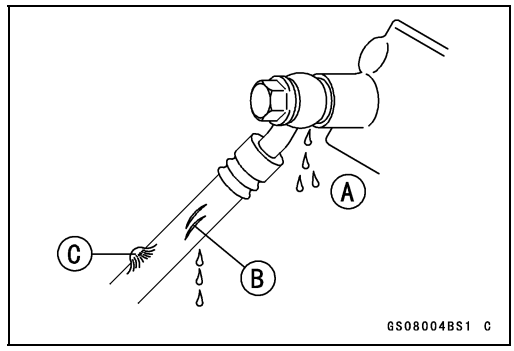

- Inspect the clutch hose and fittings for deterioration, cracks, corrosion and signs of leakage.

○The high pressure inside the clutch line can cause fluid to leak [A] or the hose to burst if the line is not properly maintained. Bend and twist the rubber hose while examining it.

★Replace it if any fraying, cracks [B] or bulges [C] are noticed.

- Check that the hose is securely connected and banjo bolts are tightened correctly.

Torque - Clutch Hose Banjo Bolts: 25 N·m (2.5 kgf·m, 18 ft·lb)

- Inspect the clutch hose routing.

★If the clutch hose routing is incorrect, run the hose according to Cable, Wire, and Hose Routing section in the Appendix chapter.

★Replace the hose if the hose been sharply bent or kinked.

Clutch Operation Inspection

- Start the engine and check that the clutch does not slip and that it releases properly.

★If the clutch operation is insufficiency, inspect the clutch system.

⚠ WARNING

When test riding the vehicle, be aware of surrounding traffic for your safety.

Clutch Fluid Level Inspection

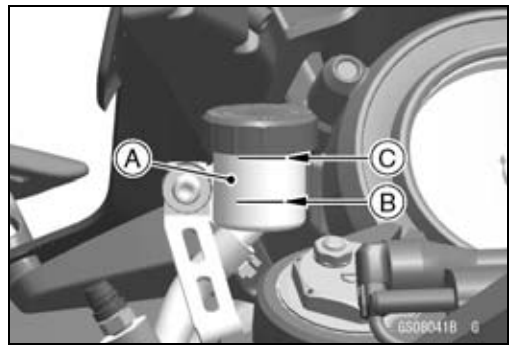

- Hold the clutch fluid reservoir [A] horizontal.
- Check that the clutch fluid level of the clutch reservoir is between the MIN [B] and the MAX [C] level lines.

NOTICE

Clutch fluid quickly damages painted plastic surfaces; any spilled fluid should be completely washed away immediately.

★If the fluid level is lower than the MIN level line, fill the reservoir to the MAX level line in the reservoir.

○Since the clutch fluid is the same as the brake fluid, refer to the Brake Fluid section in the Brakes chapter for further details.

⚠ WARNING

Mixing brands and types of hydraulic fluid lowers the fluid's boiling point, cause rubber part to deteriorate and can reduce the hydraulic clutch system's effectiveness and cause an accident resulting in injury or death. Do not mix two brands of brake fluid. Change the fluid in the hydraulic clutch system completely if the fluid must be refilled but the type and brand of the hydraulic fluid that is already in the reservoir are unidentified.

Periodic Maintenance Procedures

Clutch Fluid Change

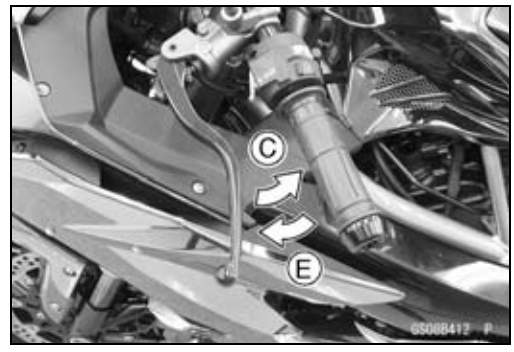



- Level the clutch fluid reservoir and remove the reservoir cap.
- Remove the rubber cap from the bleed valve on the clutch slave cylinder.
- Attach a clear plastic hose [A] to the bleed valve and run the other end of the hose into a container.
- Fill the reservoir with fresh fluid.
- Change the clutch fluid as follows.

1. Open [B] the bleed valve, using the wrenches while holding the banjo bolt.
2. Pump the clutch lever and hold [C] it.
3. Close [D] the bleed valve.
4. Release [E] the clutch lever.

○Repeat this operation until fresh fluid comes out from the plastic hose or the color of the fluid changes.

○Check the fluid level in the reservoir often, replenishing it as necessary.

NOTE

○*If the fluid in the reservoir runs completely out any time during fluid changing, the bleeding operation must be done over again from the beginning since air will have entered the line.*

⚠ WARNING

Mixing brands and types of hydraulic fluid lowers the fluid's boiling point, cause rubber part to deteriorate and can reduce the hydraulic clutch system's effectiveness and cause an accident resulting in injury or death. Do not mix two brands of brake fluid. Change the fluid in the hydraulic clutch system completely if the fluid must be refilled but the type and brand of the hydraulic fluid that is already in the reservoir are unidentified.

- After changing the fluid, check the clutch for good clutch power and no fluid leakage.

★If necessary, bleed the air from the lines (see Clutch Line Bleeding in the Clutch chapter).

- Remove the clear plastic hose.
- Tighten the bleed valve, and install the rubber cap.

Torque - Clutch Slave Cylinder Bleed Valve: 7.9 N·m (0.81 kgf·m, 70 in·lb)

- Install the reservoir cap.

Torque - Clutch Reservoir Cap (for reference): 1.5 N·m (0.15 kgf·m, 13 in·lb)

Clutch Hose Replacement

NOTICE

Clutch fluid quickly damages painted plastic surfaces; any spilled fluid should be completely washed away immediately.

- When removing the clutch hose, take care not to spill the clutch fluid on the painted or plastic parts.

Periodic Maintenance Procedures

- Remove:
  Rear Intake Duct (see Intake Duct Removal in the Frame chapter)
  Clutch Hose Banjo Bolts [A]
  Clutch Hose Fitting Bolts [B]
  Clamp [C]
- Remove the clutch hose [D] together with the clutch pipe.
- Immediately wash away any clutch fluid that spills.
- When installing the hoses, avoid sharp bending, kinking, flatting or twisting, and run the hose according to Cable, Wire, and Hose Routing section in the Appendix chapter.
- There are washers on each side of the clutch hose fittings. Replace them with new ones when installing.
- Tighten:

Torque - Clutch Hose Banjo Bolts: 25 N·m (2.5 kgf·m, 18 ft·lb)

- Fill the clutch line after installing the clutch hose (see Clutch Fluid Change).

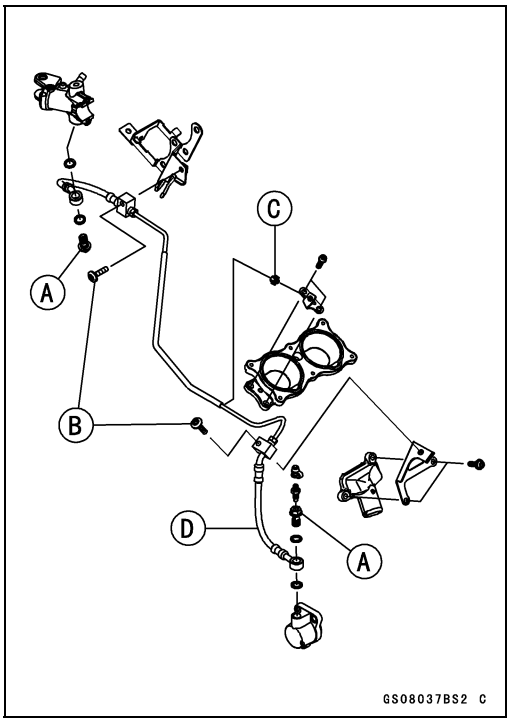

Rubber Parts of Clutch Master Cylinder/Slave Cylinder Replacement

Clutch Master Cylinder Cup and Dust Seal Replacement

- Remove the clutch master cylinder (see Clutch Master Cylinder Removal in the Clutch chapter).
- Replace the replacement parts as an assembly of the clutch master cylinder.

Clutch Slave Cylinder Piston Seal Replacement

- Remove the clutch slave cylinder (see Clutch Slave Cylinder Removal in the Clutch chapter).
- Replace the replacement parts as an assembly of the clutch slave cylinder.

Engine Lubrication System

⚠ WARNING

Vehicle operation with insufficient, deteriorated, or contaminated engine oil will cause accelerated wear and may result in engine seizure, accident, and injury. Check the oil level before each use and change the oil and filter according to the periodic maintenance chart.

Periodic Maintenance Procedures

Engine Oil Change

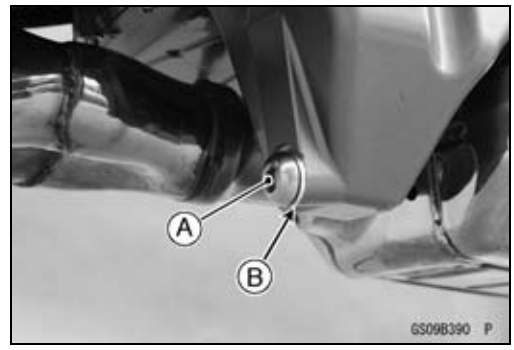

- Situate the motorcycle so that it is vertical after warming up the engine.
- Remove the engine oil drain bolt [A] to drain the oil.

○The oil in the oil filter can be drained by removing the filter (see Oil Filter Replacement).

- Replace the drain bolt gasket [B] with a new one.
- Tighten the drain bolt.

Torque - Engine Oil Drain Bolt: 25 N·m (2.5 kgf·m, 18 ft·lb)



- Remove the oil filler plug [A].

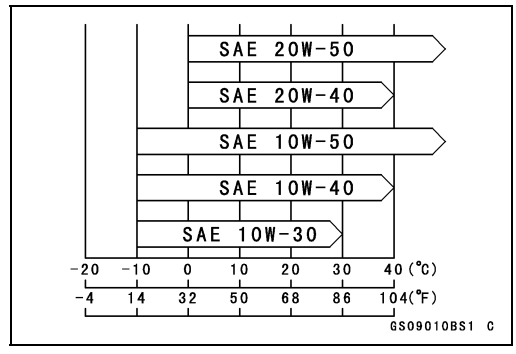

- Pour in the specified type and amount of oil.

Recommended Engine Oil

Type:	**API SG, SH, SJ, SL or SM with JASO MA, MA1 or MA2**
Viscosity:	**SAE 10W-40**
Capacity:	**3.9 L (4.1 US qt) (When filter is not removed)**
	4.4 L (4.7 US qt) (When filter is removed)
	5.0 L (5.3 US qt) (When engine is completely dry)

NOTE

○*Do not add any chemical additive to the oil. Oils fulfilling the above requirements are fully formulated and provide adequate lubrication for both the engine and the clutch.*

○*Although 10W-40 engine oil is the recommended oil for most conditions, the oil viscosity may need to be changed to accommodate atmospheric conditions in your riding area.*

- Replace the O-ring of the oil filler plug with a new one.
- Apply grease to the new O-ring.
- Install the oil filler plug.

Torque - Oil Filler Plug: 10 N·m (1.0 kgf·m, 89 in·lb)

- Check the oil level (see Oil Level Inspection in the Engine Lubrication System chapter).

Periodic Maintenance Procedures

Oil Filter Replacement



- Drain the engine oil (see Engine Oil Change).
- Remove the oil filter with the oil filter wrench [A].

Special Tool - Oil Filter Wrench: 57001-1212

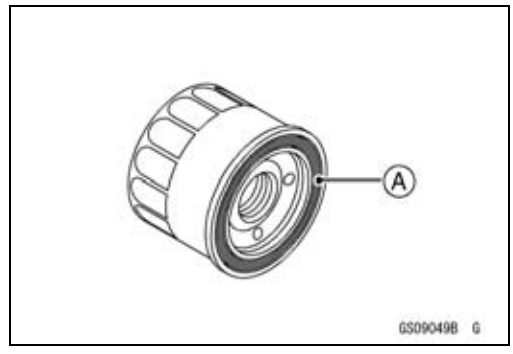

- Replace the filter with a new one.
- Apply grease to the gasket [A] before installation.
- Tighten the filter with the oil filter wrench.

Special Tool - Oil Filter Wrench: 57001-1212

Torque - Oil Filter: 17 N·m (1.7 kgf·m, 13 ft·lb)

NOTE

○*Hand tightening of the oil filter can not be allowed since it does not reach to this tightening torque.*

- Pour in the specified type and capacity of oil (see Engine Oil Change).

Wheels/Tires

Air Pressure Inspection



- Remove the air valve cap.
- Measure the tire air pressure with an air pressure gauge [A] when the tires are cold (that is, when the motorcycle has not been ridden more than a mile during the past 3 hours).
- Install the air valve cap.

★Adjust the tire air pressure according to the specifications if necessary.

Air Pressure (when Cold)

Front: Up to 105 kg (231 lb) load:
250 kPa (2.50 kgf/cm², 36 psi)

Rear: Up to 105 kg (231 lb) load:
290 kPa (2.90 kgf/cm², 42 psi)

Wheels and Tires Inspection

Wheel/Tire Damage Inspection

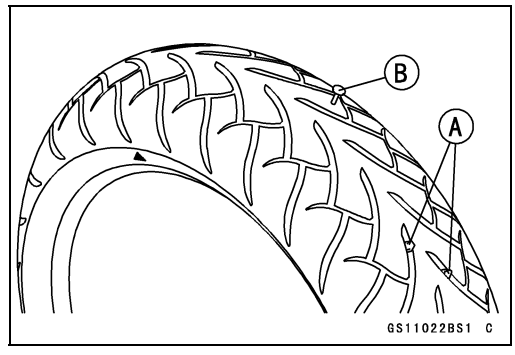

- Remove any imbedded stones [A] or other foreign particles [B] from tread.
- Visually inspect the tire for cracks and cuts, and replace the tire if necessary. Swelling or high spots indicate internal damage, requiring tire replacement.
- Visually inspect the wheel for cracks, cuts and dents damage.

★If any damage is found, replace the wheel if necessary.

Periodic Maintenance Procedures

Tire Tread Wear Inspection

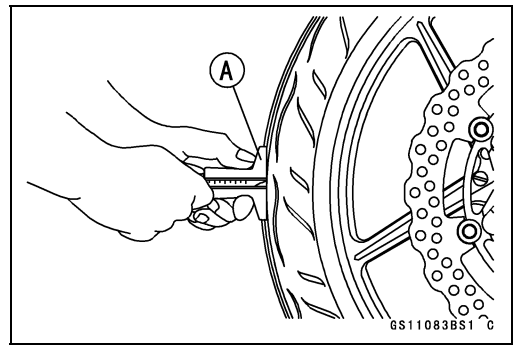

As the tire tread wears down, the tire becomes more susceptible to puncture and failure. An accepted estimate is that 90% of all tire failures occur during the last 10% of tread life (90% worn). So it is false economy and unsafe to use the tires until they are bald.

- Measure the tread depth at the center of the tread with a depth gauge [A]. Since the tire may wear unevenly, take measurement at several places.

★If any measurement is less than the service limit, replace the tire (see Tire Removal/Installation in the Wheels/Tires chapter).

Tread Depth

Standard:

Front	**3.6 mm (0.14 in.)**
Rear	**5.0 mm (0.20 in.)**

Service Limit:

Front	**1 mm (0.04 in.)**
	(AT, CH, DE) 1.6 mm (0.06 in.)
Rear	**2 mm (0.08 in.) (Up to 130 km/h (80 mph))**
	3 mm (0.12 in.) (Over 130 km/h (80 mph))

⚠ WARNING

Some replacement tires may adversely affect handling and cause an accident resulting in serious injury or death. To ensure proper handling and stability, use only the recommended standard tires for replacement, inflated to the standard pressure.

NOTE

○*Most countries may have their own regulations a minimum tire tread depth: be sure to follow them.*

○*Check and balance the wheel when a tire is replaced with a new one.*

Wheel Bearing Damage Inspection

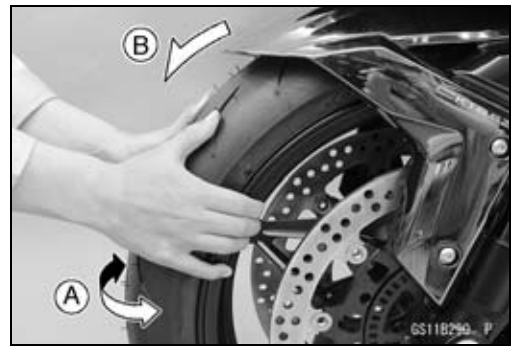

- Raise the front wheel off the ground with the front stand or the webbing sling.
- Turn the handlebar all the way to the right or left.
- Inspect the roughness of the front wheel bearing by pushing and pulling [A] the wheel.
- Spin [B] the front wheel lightly, and check for smoothly turn, roughness, binding or noise.

★If roughness, binding or noise is found, remove the front wheel and inspect the wheel bearing (see Front Wheel Removal, Hub Bearing Inspection in the Wheels/Tires chapter).

Periodic Maintenance Procedures

- Raise the rear wheel off the ground with the rear stand.
- Inspect the roughness of the rear wheel bearing by pushing and pulling [A] the wheel.
- Spin [B] the rear wheel lightly, and check for smoothly turn, roughness, binding or noise.

★If roughness, binding or noise is found, remove the rear wheel and inspect the wheel bearing (see Rear Wheel Removal, Hub Bearing Inspection in the Wheels/Tires chapter) and coupling (see Coupling Bearing Inspection in the Final Drive chapter).

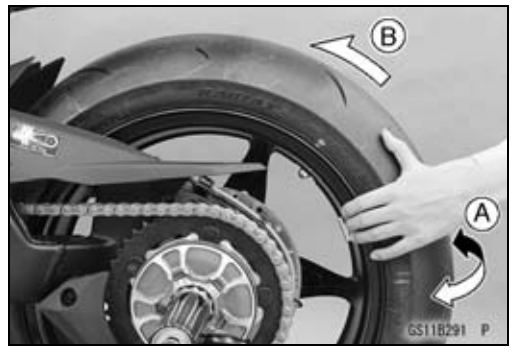

Final Drive

Drive Chain Lubrication Condition Inspection

Lubrication is necessary after riding through rain or on wet roads, or any time that the chain appears dry.

Use a lubricant for sealed chains to prevent deterioration of chain seals. If the chain is especially dirty, clean it using a cleaner for sealed chains following the instructions supplied by the chain cleaner manufacturer.

NOTICE

The O-rings between the side plates seal in the lubricant between the pin and the bushing. To avoid damaging the O-rings and resultant loss of lubricant, observe the following rules.
Use only chain cleaner for cleaning of the O-ring of the drive chain. Any other cleaning solution such as gasoline will cause deterioration and swelling of the O-ring. Immediately blow the chain dry with compressed air after cleaning. Complete cleaning and drying the chain within 10 minutes.

- Apply chain oil to the sides of the rollers so that oil will penetrate to the rollers and bushings. Apply the oil to the O-rings so that the O-rings will be coated with oil.
- Wipe off any excess oil.
  Oil Applied Areas [A]
  O-rings [B]
- Wipe off lubricant that gets on the tire surface.

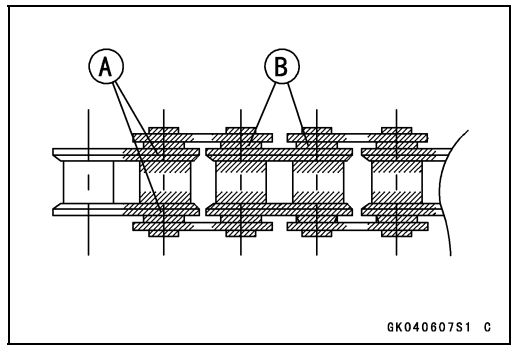

Periodic Maintenance Procedures

Drive Chain Slack Inspection

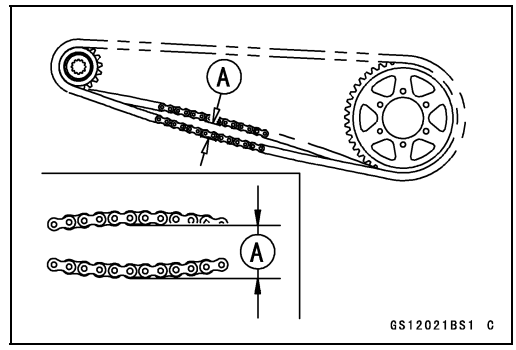

NOTE

○*Check the slack with the motorcycle setting on its side stand.*

○*Clean the chain if it is dirty, and lubricate it if it appears dry.*

- Rotate the rear wheel to find the position where the chain is tightest.
- Measure the vertical movement (chain slack) [A] midway between the sprockets.

★If the chain slack exceeds the standard, adjust it.

Chain Slack

Standard: 25 ~ 35 mm (1.0 ~ 1.4 in.)

Drive Chain Slack Adjustment

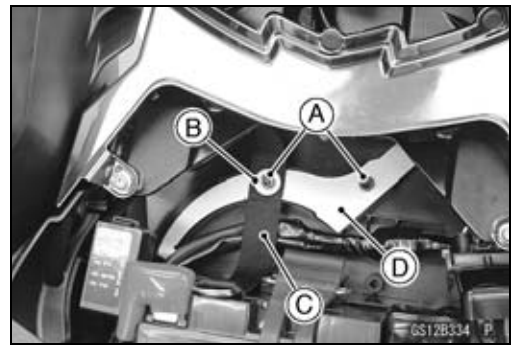

- Remove:
  Seat (see Seat Removal in the Frame chapter)
  Tool Kit
  Bolts [A]
  Washer [B]
  Band [C]
  Hook Wrench [D]

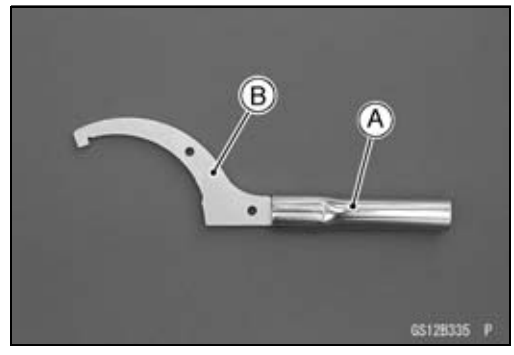

- Attach the adapter [A] to the hook wrench [B].

NOTE

○*The adapter of the hook wrench is in the tool kit bag.*



- Loosen the bearing housing clamp bolts [A] gradually and evenly.

Periodic Maintenance Procedures

● Turn the chain adjuster [A] until the drive chain has correct amount of slack with the hook wrench [B].
★If the chain is too loose, turn the chain adjuster counter-clockwise.
★If the chain is too tight, turn the chain adjuster clockwise [C].

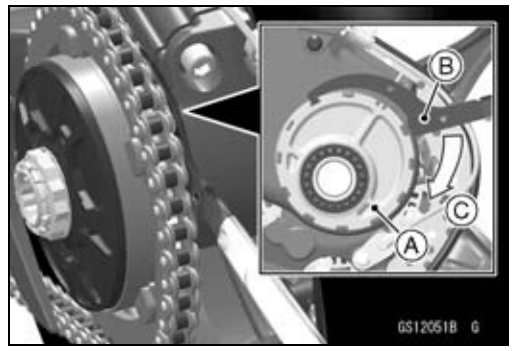

● Push the rear wheel to the right side [A] of the vehicle.
● Confirm that there is not a clearance [B] between the chain adjuster [C] and the swingarm [D].

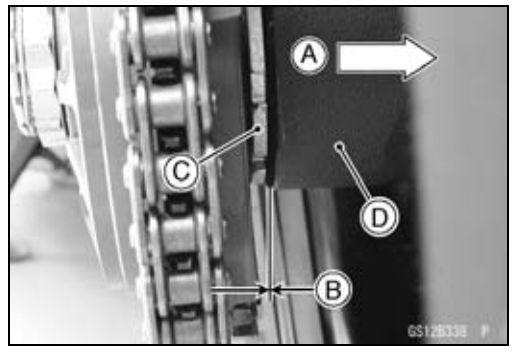

● Tighten the bearing housing clamp bolts [A] [B] following specified tightening sequence.

Tightening Sequence:

[A → B → A → B → A → B → A]

Torque - Bearing Housing Clamp Bolts: 33 N·m (3.4 kgf·m, 24 ft·lb)



● Install the hook wrench [A], band and washer, and tighten its bolt.
○Install the band [B] as shown.

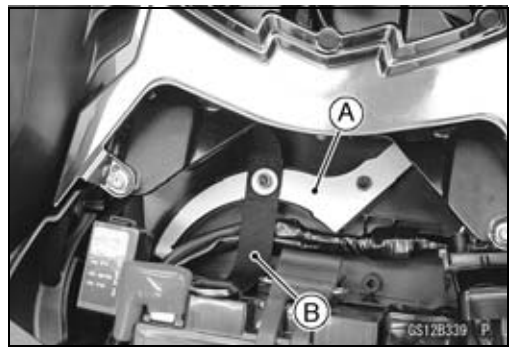

Periodic Maintenance Procedures

Drive Chain Wear Inspection

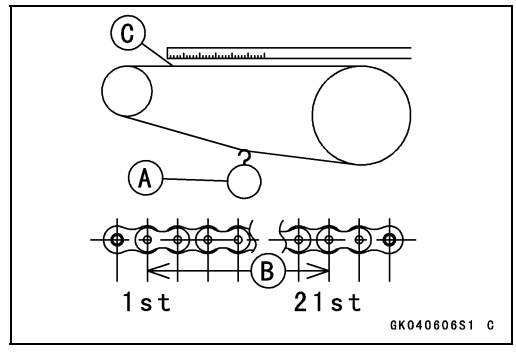

- Remove the mud guard (see Mud Guard Removal in the Frame chapter).
- Rotate the rear wheel to inspect the drive chain for damaged rollers, and loose pins and links.

★If there is any irregularity, replace the drive chain.

★Lubricate the drive chain if it appears dry.

- Stretch the chain taut by hanging a 10 kg (22 lb) weight [A] on the chain.
- Measure the length of 20 links [B] on the straight part [C] of the chain from the pin center of the 1st pin to the pin center of the 21st pin. Since the chain may wear unevenly, take measurements at several places.

★If any measurements exceed the service limit, replace the chain. Also, replace the front and rear sprockets when the drive chain is replaced.

Drive Chain 20-link Length

Standard: 317.5 ~ 318.2 mm (12.50 ~ 12.53 in.)

Service Limit: 319 mm (12.6 in.)

⚠ WARNING

A chain that breaks or jumps off the sprockets could snag on the engine sprocket or lock the rear wheel, severely damaging the motorcycle and causing it to go out of control. Inspect the chain for damage and proper adjustment before each ride. If chain wear exceeds the service limit, replace it with the standard chain.

Standard Chain

Make: ENUMA

Type: EK525RMXZ/3D

Link: 118 links

Chain Guide Wear Inspection

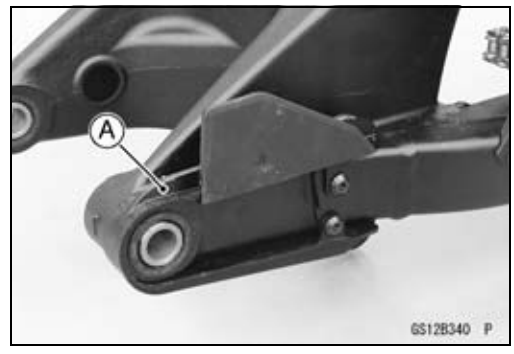

- Remove the swingarm (see Swingarm Removal in the Suspension chapter).
- Visually inspect the chain guide [A].

★Replace the chain guide if it shows any signs of abnormal wear or damage.

Periodic Maintenance Procedures

Brakes

Brake System Inspection

Brake Fluid Leak (Brake Hose and Pipe) Inspection

- Remove the right inner cover (see Inner Cover Removal in the Frame chapter).
- Apply the brake lever or pedal and inspect the brake fluid leak from the brake hoses [A], pipes [B] and fittings [C].

★If the brake fluid leaked from any position, inspect or replace the problem part.

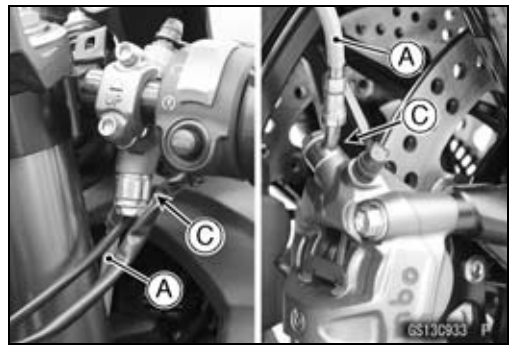

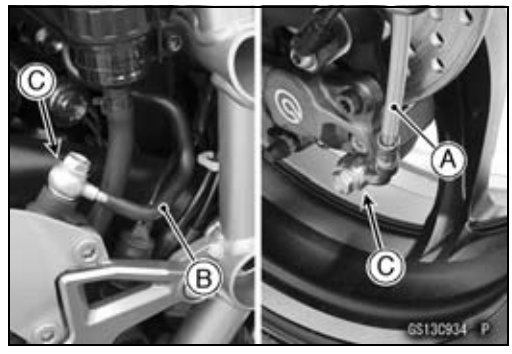

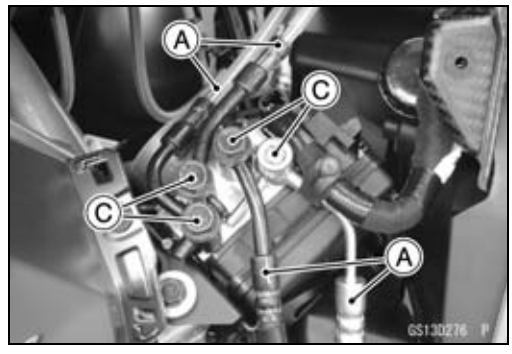

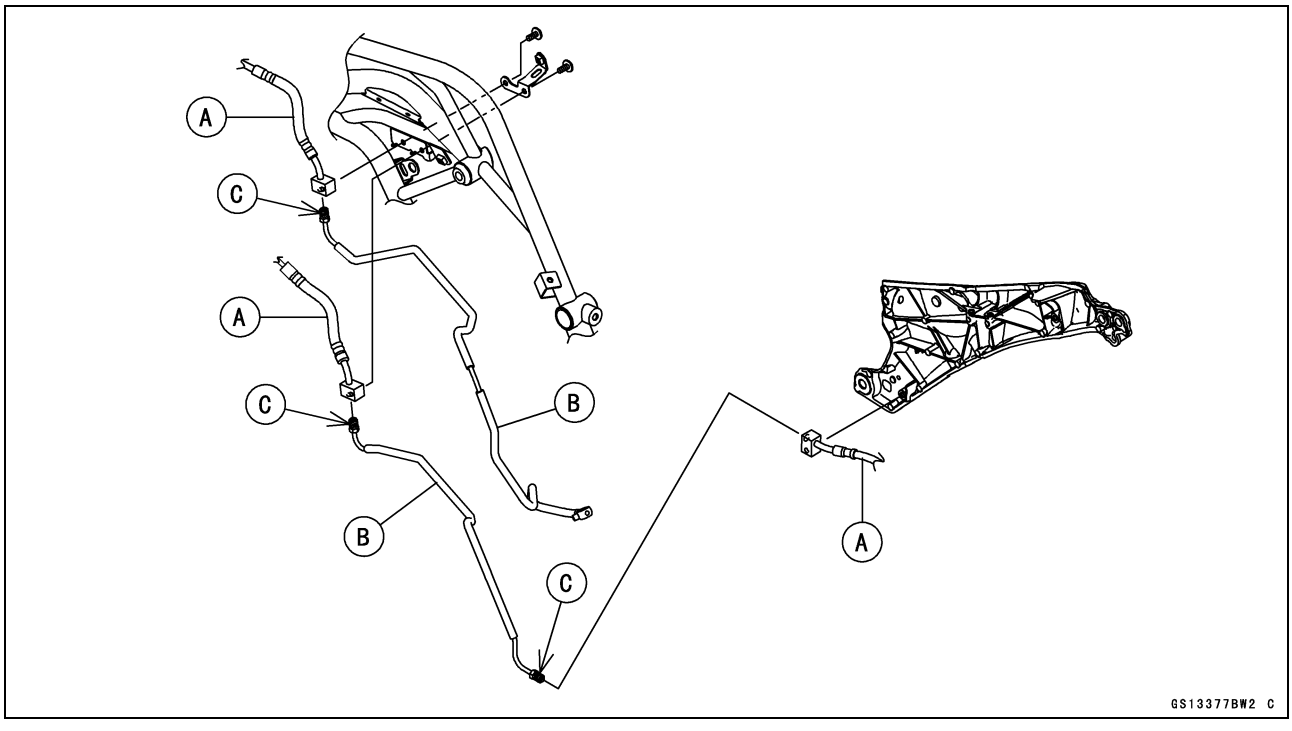

Periodic Maintenance Procedures

Brake Hose and Pipe Damage and Installation Condition Inspection

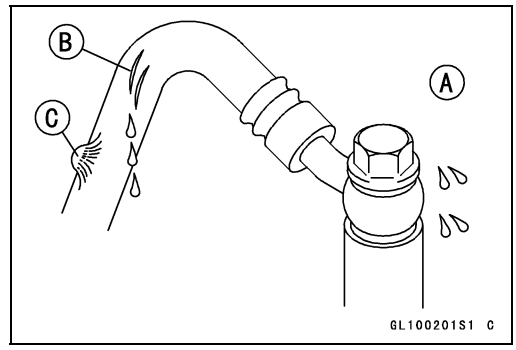

- Remove the right inner cover (see Inner Cover Removal in the Frame chapter).
- Inspect the brake hoses, pipes and fittings for deterioration, cracks and signs of leakage.

○The high pressure inside the brake line can cause fluid to leak [A] or the hose, pipe to burst if the line is not properly maintained. Bend and twist the rubber hose while examining it.

★Replace the hose and pipe if any crack [B], bulge [C] or leakage is noticed.

★Tighten any brake hose banjo bolts and brake pipe joint nuts.

Torque - Brake Hose Banjo Bolts: 25 N·m (2.5 kgf·m, 18 ft·lb)
Brake Pipe Joint Nuts: 18 N·m (1.8 kgf·m, 13 ft·lb)

- Inspect the brake hose and pipe routing.

★If any brake hose and pipe routing is incorrect, run the brake hose and pipe according to Cable, Wire, and Hose Routing section in the Appendix chapter.

Brake Operation Inspection

- Inspect the operation of the front and rear brake by running the vehicle on the dry road.

★If the brake operation is insufficiency, inspect the brake system.

⚠ WARNING

When test riding the vehicle, be aware of surrounding traffic for your safety.

Brake Fluid Level Inspection

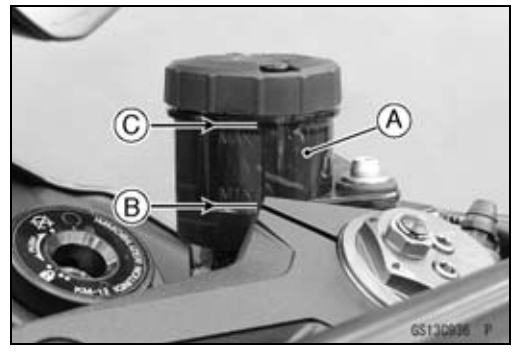

- Check that the brake fluid level in the front brake reservoir [A] is above the MIN level line [B].

NOTE

○*Hold the reservoir horizontal by turning the handlebar when checking brake fluid level.*

NOTICE

Brake fluid quickly damages painted plastic surfaces; any spilled fluid should be completely washed away immediately.

★If the fluid level is lower than the MIN level line, fill the reservoir to the MAX level line [C].

- Tighten:

Torque - Front Brake Fluid Reservoir Cap Screws: 0.70 N·m (0.07 kgf·m, 6.2 in·lb)

Periodic Maintenance Procedures

● Check that the brake fluid level in the rear brake reservoir [A] is above the lower level line [B].

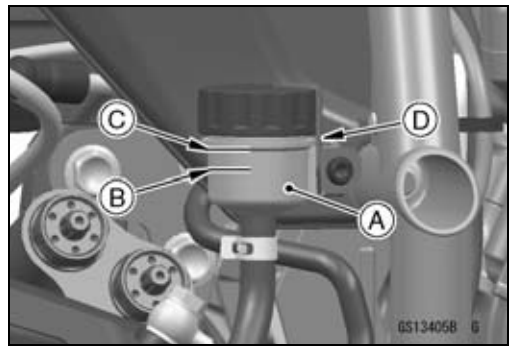

NOTICE
Brake fluid quickly damages painted plastic surfaces; any spilled fluid should be completely washed away immediately.

★If the fluid level is lower than the lower level line, fill the reservoir to the upper level line [C].

○Remove the stopper [D].

⚠ WARNING
Mixing brands and types of brake fluid can reduce the brake system's effectiveness and cause an accident resulting in injury or death. Do not mix two brands of brake fluid. Change the brake fluid in the brake line completely if the brake fluid must be refilled but the type and brand of the brake fluid that is already in the reservoir are unidentified.

Recommended Disc Brake Fluid
Grade: DOT4

● Follow the procedure below to install the rear brake fluid reservoir cap correctly.

○First, tighten the brake fluid reservoir cap [A] clockwise [B] by hand until slight resistance is felt indicating that the cap is seated on the reservoir body, then tighten the cap an additional 1/6 turn [C] while holding the brake fluid reservoir body [D].

● Install the stopper and tighten the screw.

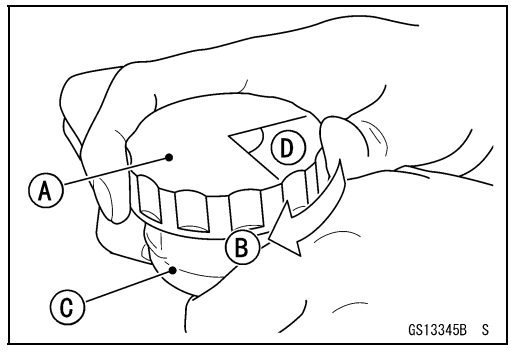

Brake Fluid Change

Front Brake

● Level the brake fluid reservoir.

● Remove the reservoir cap, diaphragm plate and diaphragm.

● Remove the rubber cap [A] from the bleed valve on the caliper.

● Attach a wrench [B] and a clear plastic hose [C] to the bleed valve, and run the other end of the hose into a container.

● Fill the reservoir with fresh specified brake fluid.

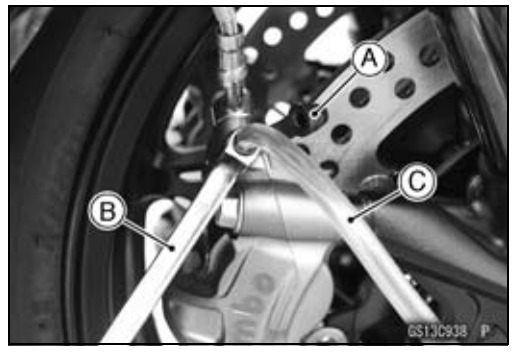

Periodic Maintenance Procedures

● Change the brake fluid.

○Repeat this operation until fresh brake fluid comes out from the plastic hose or the color of the fluid changes.

1. Open the bleed valve [A].
2. Apply the brake and hold it [B].
3. Close the bleed valve [C].
4. Release the brake [D].

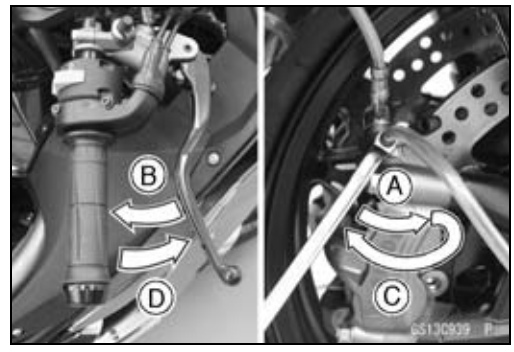

NOTE

○*The fluid level must be checked often during the changing operation and replenished with fresh brake fluid. If the fluid in the reservoir runs out any time during the changing operation, the brakes will need to be bled since air will have entered the brake line.*

○*Repeat the above steps for the other caliper.*

● Remove the clear plastic hose.

● Install the diaphragm, diaphragm plate and reservoir cap.

● Tighten:

Torque - Front Brake Fluid Reservoir Cap Screws: 0.70 N·m (0.07 kgf·m, 6.2 in·lb)

● Tighten the bleed valve, and install the rubber cap.

Torque - Front Caliper Bleed Valves: 16 N·m (1.6 kgf·m, 12 ft·lb)

● After changing the fluid, check the brake for good braking power, no brake drag, and no fluid leakage.

★If necessary, bleed the air from the lines.

Rear Brake

● Loosen the reservoir cap stopper bolt [A] to remove the reservoir cap stopper [B], reservoir cap [C], diaphragm plate, diaphragm.

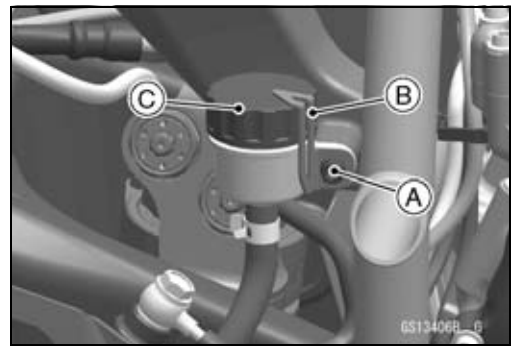

● Remove:
Rear Caliper Mounting Bolts [A]
Rear Caliper [B]

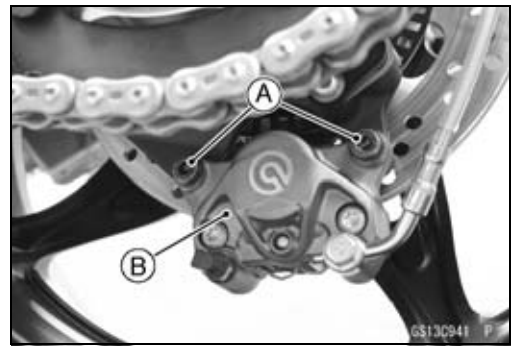

Periodic Maintenance Procedures

● Face the bleed valve upward.
● Remove the rubber cap [A] from the bleed valve on the caliper.
● Attach a wrench [B] and a clear plastic hose [C] to the bleed valve, and run the other end of the hose into a container.
● Install the suitable plate [D] between the brake pads.

Rear Brake Disk Thickness (For Reference):
5 mm (0.2 in.)

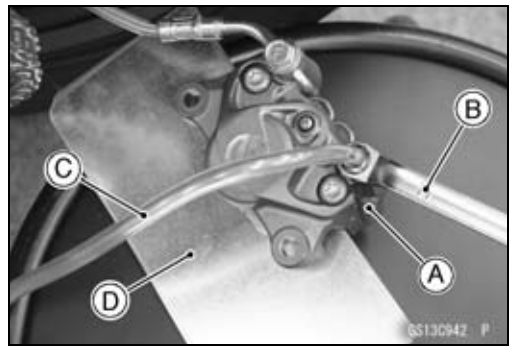

● Fill the reservoir with fresh specified brake fluid.

● Change the brake fluid.
○Repeat this operation until fresh brake fluid comes out from the plastic hose or the color of the fluid changes.
1. Open the bleed valve [A].
2. Apply the brake and hold it [B].
3. Close the bleed valve [C].
4. Release the brake [D].

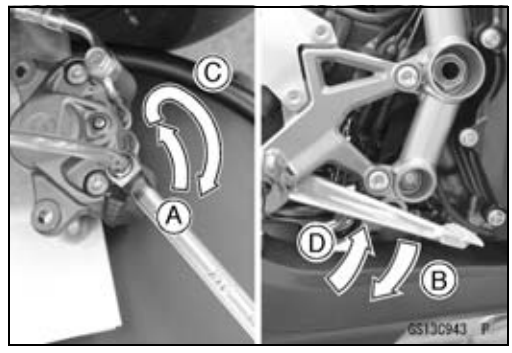

NOTE

○*The fluid level must be checked often during the changing operation and replenished with fresh brake fluid. If the fluid in the reservoir runs out any time during the changing operation, the brakes will need to be bled since air will have entered the brake line.*

● Remove the clear plastic hose.
● Install the diaphragm, diaphragm plate and reservoir cap.

● Follow the procedure below to install the rear brake fluid reservoir cap correctly.
○First, tighten the rear brake fluid reservoir cap [A] clockwise [B] by hand until slight resistance is felt indicating that the cap is seated on the reservoir body, then tighten the cap an additional 1/6 turn [C] while holding the brake fluid reservoir body [D].

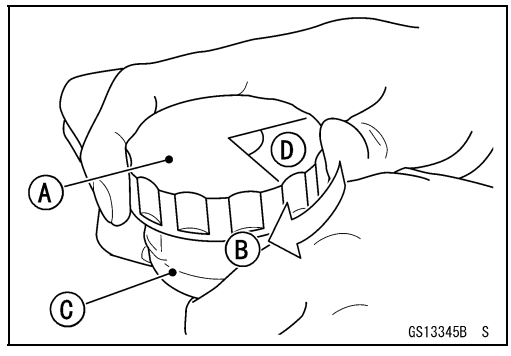

● Install the reservoir cap stopper, and tighten its bolt.
● Tighten the bleed valve, and install the rubber cap.

Torque - Rear Caliper Bleed Valve: 16 N·m (1.6 kgf·m, 12 ft·lb)

● Install the rear caliper.
● Apply a non-permanent locking agent to the rear caliper mounting bolts.
● Tighten:

Torque - Rear Caliper Mounting Bolts: 27 N·m (2.8 kgf·m, 20 ft·lb)

● After changing the fluid, check the brake for good braking power, no brake drag, and no fluid leakage.
★If necessary, bleed the air from the lines.

Periodic Maintenance Procedures

This page intentionally left blank.

Periodic Maintenance Procedures

Brake Hose and Pipe Replacement

NOTICE
Brake fluid quickly damages painted plastic surfaces; any spilled fluid should be completely washed away immediately.

NOTE

○*When removing the brake pipes and hoses on the hydraulic unit, remove them with the flare nut wrench according to each assembly of the exploded view in the Brakes chapter.*

● Remove:
Fuel Tank (see Fuel Tank Removal in the Fuel System (DFI) chapter)
Rear Fender (see Rear Fender Removal in the Frame chapter)
Brake Pipe Joint Nuts [A]
Brake Hose Banjo Bolts [B] [C]
Brake Hose Fitting Bolts [D]
Clamps

● There are washers on each side of the brake hose and pipe fitting. Replace them with new ones when installing.

● Before installing the brake pipe, check to see that there is no damage on the threads of the brake pipe joint nut.

★If there is any damage, replace the damaged parts with new ones.

NOTE

○*Tighten the brake pipe joint nut at both ends of the brake pipe temporarily and then tighten them to the specified torque.*

● Install the brake pipes and brake hoses to the specified angle (see Cable, Wire, and Hose Routing section in the Appendix chapter).

● Tighten the brake pipe joint nuts with the flare nut wrench.

● Tighten:

Torque - Brake Hose Banjo Bolts: 25 N·m (2.5 kgf·m, 18 ft·lb)
Brake Pipe Joint Nuts: 18 N·m (1.8 kgf·m, 13 ft·lb)

NOTE

○*The thread pitch of the banjo bolt [C] for rear master cylinder differs from the other banjo bolts. Check the thread pitch before installing.*

● Fill the brake line after installing the brake hose and pipe (see Brake Fluid Change).

Periodic Maintenance Procedures

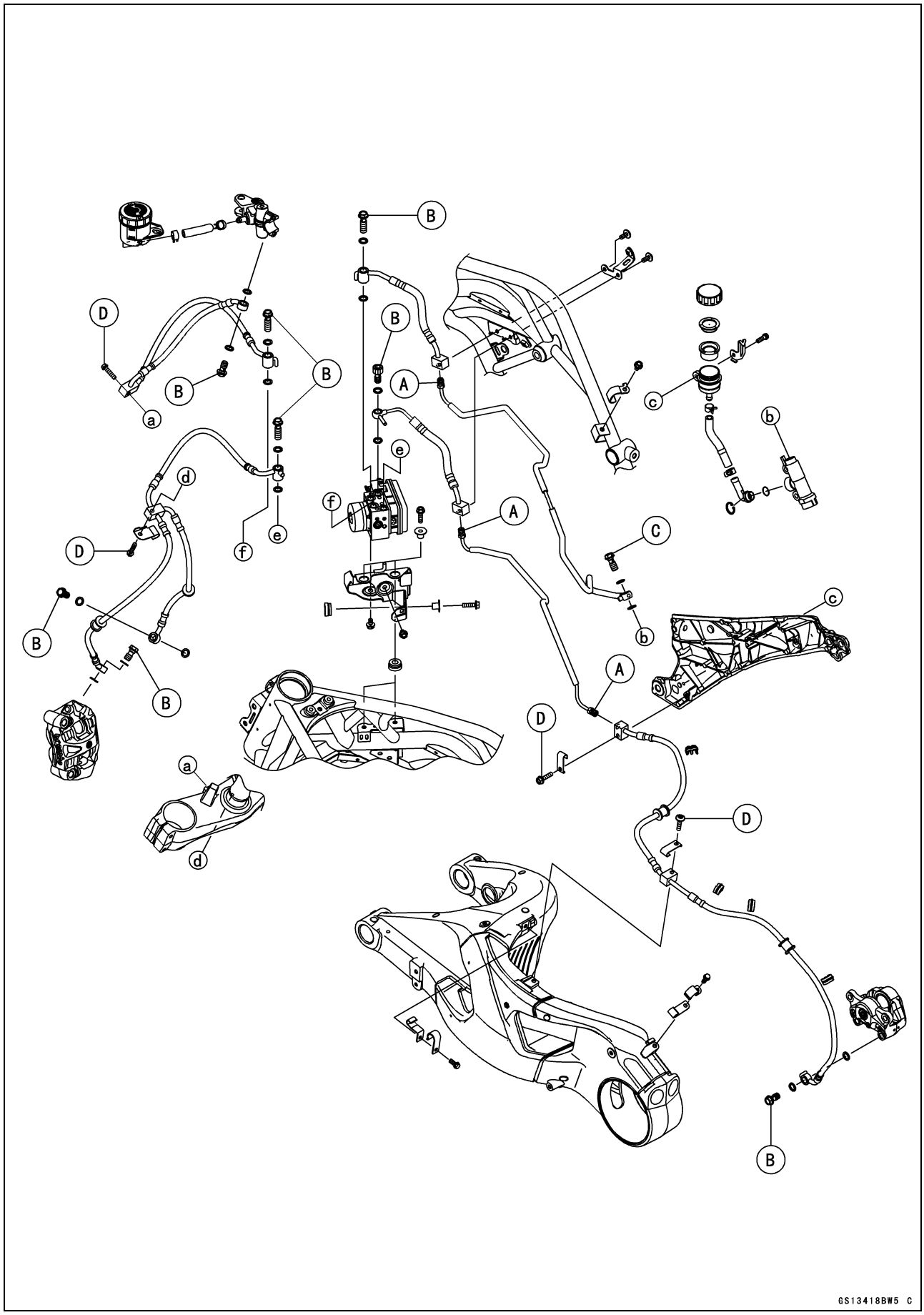

Periodic Maintenance Procedures

Master Cylinder Rubber Parts Replacement

Front Master Cylinder Disassembly

- Remove the front master cylinder (see Front Master Cylinder Removal in the Brakes chapter).
- Replace the replacement parts as an assembly of the front master cylinder.

Rear Master Cylinder Disassembly

- Remove the rear master cylinder (see Rear Master Cylinder Removal in the Brakes chapter).
- Remove the circlip [A], connector [B] and O-ring [C].

  Special Tool - Inside Circlip Pliers: 57001-143
- Slide the dust cover [D] out of place, and remove the circlip [E].
- Pull out the push rod assembly [F].
- Remove the piston assembly [G] and return spring [H].

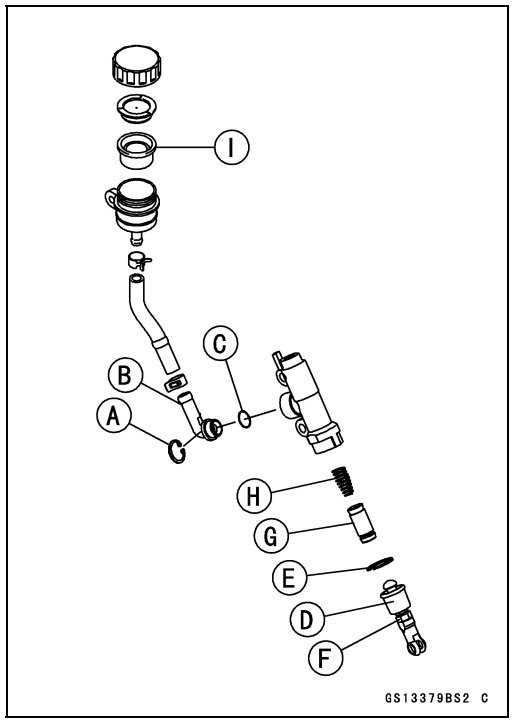

NOTICE

Do not remove the secondary cup from the piston since removal will damage it.

- Replace:
  Circlip [A]
  O-ring [C]
  Circlip [E]
  Push Rod Assembly [F]
  Piston Assembly [G]
  Diaphragm [I]

Rear Master Cylinder Assembly

- Before assembly, clean all parts including the master cylinder with brake fluid or alcohol.

NOTICE

Except for the disc pads and disc, use only disc brake fluid, isopropyl alcohol, or ethyl alcohol for cleaning brake parts. Do not use any other fluid for cleaning these parts. Gasoline, engine oil, or any other petroleum distillate will cause deterioration of the rubber parts. Oil spilled on any part will be difficult to wash off completely, and will eventually deteriorate the rubber used in the disc brake.

- Apply brake fluid to the new parts and to the inner wall of the cylinder.
- Take care not to scratch the piston or the inner wall of the cylinder.
- Apply silicone grease to the dust cover of the push rod assembly.
- Assemble the rear master cylinder.

Caliper Rubber Parts Replacement

Front Caliper Disassembly

- Remove:
  Front Caliper (see Front Caliper Removal in the Brakes chapter)
  Brake Pads (see Front Brake Pad Removal in the Brakes chapter)

Periodic Maintenance Procedures

● Hold the pistons nearest the oil passage [A] with the bands [B].

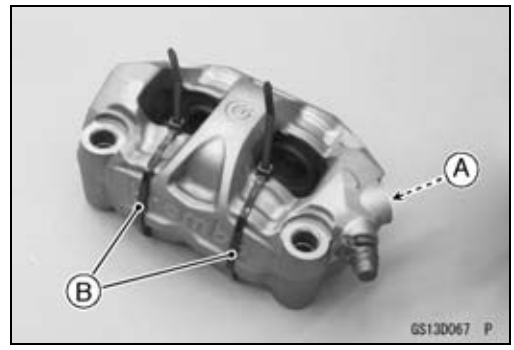

● Using compressed air, remove the pistons.
○Cover the caliper opening with a clean heavy cloth [A].
○Lightly apply compressed air [B] to the oil passage.

⚠ WARNING

The piston in the brake caliper can crush hands and fingers. Never place your hand or fingers in front of the piston.

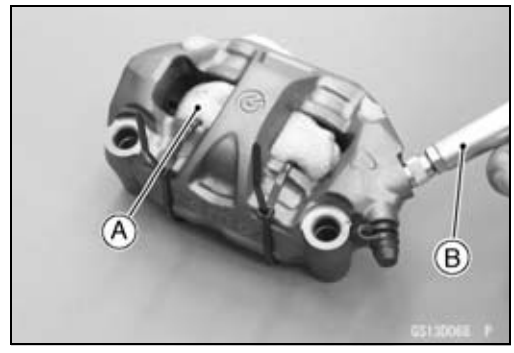

○Pull out the pistons by hand.

● When compressed air is not used, using the brake caliper piston pliers [A] remove the pistons [B].

Special Tool - Brake Caliper Piston Pliers (φ16 ~ φ26): 57001-1861

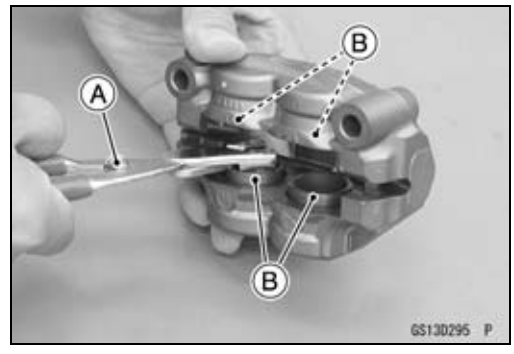

● Remove the fluid seals [A] and dust seals [B].
● Cut the bands.
● Repeat the previous step to remove the pistons from the other side of the caliper body.
● Remove the bleed valve and rubber cap.

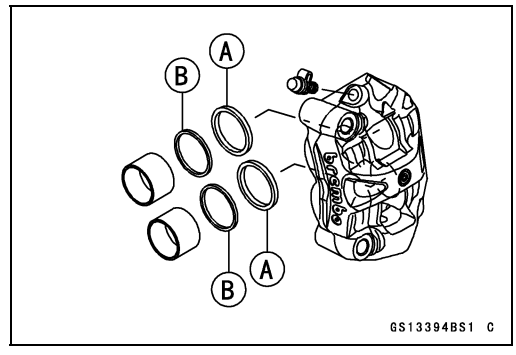

Front Caliper Assembly

● Clean the caliper parts except for the pads.

NOTICE

For cleaning the parts, use only disc brake fluid, isopropyl alcohol, or ethyl alcohol.

● Install the bleed valve and rubber cap.
● Tighten:

Torque - Front Caliper Bleed Valves: 16 N·m (1.6 kgf·m, 12 ft·lb)

Periodic Maintenance Procedures

- Replace the fluid seals [A] with new ones.
○Apply silicone grease to the fluid seals, and install them into the cylinders by hand.
- Replace the dust seals [B] with new ones if they are damaged.
○Apply silicone grease to the dust seals, and install them into the cylinders by hand.

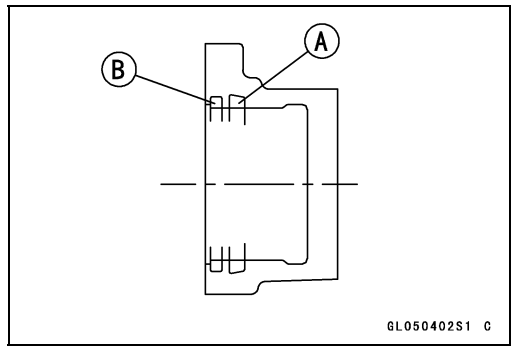

- Apply brake fluid to the outside of the pistons, and push them into each cylinder by hand.
- Install the removed parts (see appropriate chapters).
- Wipe up any spilled brake fluid on the caliper with wet cloth.

Rear Caliper

- Remove:
  Rear Caliper (see Rear Caliper Removal in the Brakes chapter)
  Rear Brake Pads (see Rear Brake Pad Removal in the Brakes chapter)
- Replace the replacement parts as an assembly of the rear caliper.

Brake Pad Wear Inspection

Front Brake Pad

- Remove the front brake pads (see Front Brake Pad Removal in the Brakes chapter).
- Check the lining thickness [A] of the pads in each caliper.

★If the lining thickness of either pad is less than the service limit [B], replace both pads in the caliper as a set.

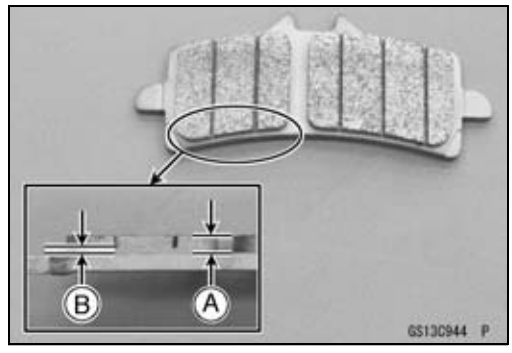

Front Brake Pad Lining Thickness

Standard:	**3.7 mm (0.15 in.)**
Service Limit:	**1 mm (0.04 in.)**

Rear Brake Pad

- Remove the rear brake pads (see Rear Brake Pad Removal in the Brakes chapter).
- Check the thickness [A] of the pad lining [B] and the back plate [C] without the shim [D].

★If the thickness of either pad is less than the service limit [E], replace both pads in the caliper as a set.

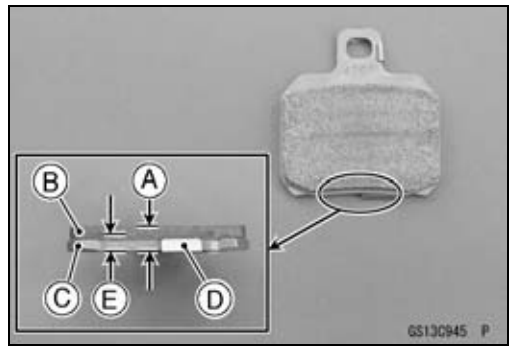

Rear Brake Pad Lining Thickness

Standard:	**6.95 mm (0.27 in.) (Thickness of pad lining and back plate)**
Service Limit:	**4.5 mm (0.18 in.) (Thickness of pad lining and back plate)**

Periodic Maintenance Procedures

- When installing the rear brake pads [A], install them so that the arrow mark [B] faces the wheel rotation direction.

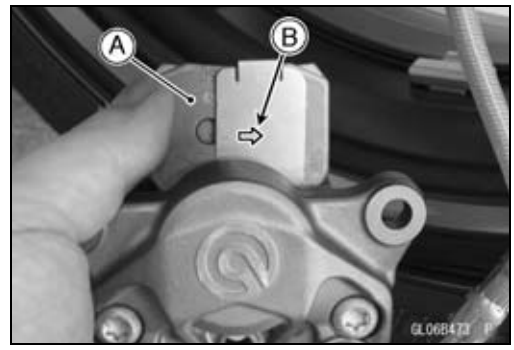

Brake Light Switch Operation Inspection

- Turn the ignition switch on.
- Confirm the brake light (LED) [A] should go on when the brake lever is applied or after the brake pedal is depressed about 10 mm (0.39 in.).



★If it does not, adjust the brake light switch.

- While holding the switch body, turn the adjusting nut to adjust the switch.

  Switch Body [A]
  Adjusting Nut [B]
  Light sooner as the body rises [C]
  Light later as the body lowers [D]

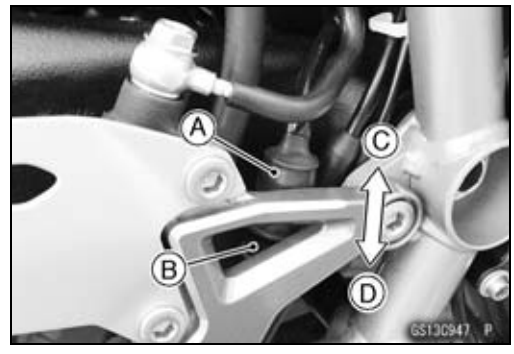

NOTICE
To avoid damaging the electrical connections inside the switch, be sure that the switch body does not turn during adjustment.

★If it does not go on, inspect or replace the following parts.

Battery (see Charging Condition Inspection in the Electrical System chapter)
Brake Light (LED) (see Tail/Brake Light (LED) Removal/Installation in the Electrical System chapter)
Main Fuse 30 A and Brake Light/Horn Fuse 10 A (see Fuse Inspection in the Electrical System chapter)
Front Brake Light Switch [A] (see Switch Inspection in the Electrical System chapter)
Rear Brake Light Switch (see Switch Inspection in the Electrical System chapter)
Harness (see Wiring Inspection in the Electrical System chapter)



Periodic Maintenance Procedures

Suspension

Suspension System Inspection

Front Forks/Rear Shock Absorber Operation Inspection

- Pump the forks down and up [A] 4 or 5 times, and inspect the smooth stroke.

★If the forks do not smoothly or noise is found, inspect the fork oil level or fork clamps (see Front Fork Oil Change in the Suspension chapter).



- Pump the seat down and up [A] 4 or 5 times, and inspect the smooth stroke.

★If the shock absorber does not smoothly stroke or noise is found, inspect the oil leak (see Rear Shock Absorber Oil Leak Inspection).

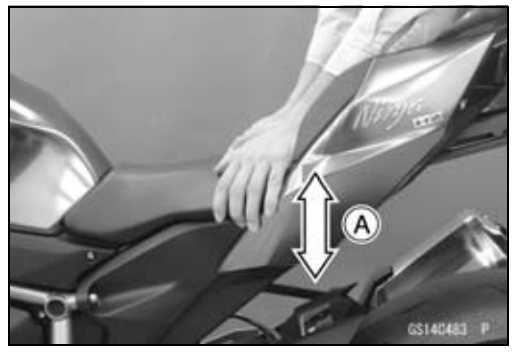

Front Fork Oil Leak Inspection

- Visually inspect the front forks [A] for oil leakage.

★Replace any defective parts, if necessary.



Front Fork Oil Leakage Judgment Procedure

NOTE

○*Inner tube of front fork of this motorcycle has been coated with diamond like carbon (DLC). For DLC coating, oil film on its surface is easily recognizable compared to general nickel chrome plating, so oil film of inner tube by normal operation can be misunderstood oil leakage.*

- Pull out the dust seal [A] from the outer tube and slide down it.



Periodic Maintenance Procedures

- Using a high flash-point solvent, clean off any oil or dirt from the inner tube [A]. Dry it with a clean cloth.
- Apply the front brake, pump the front forks down and up about 5 times.

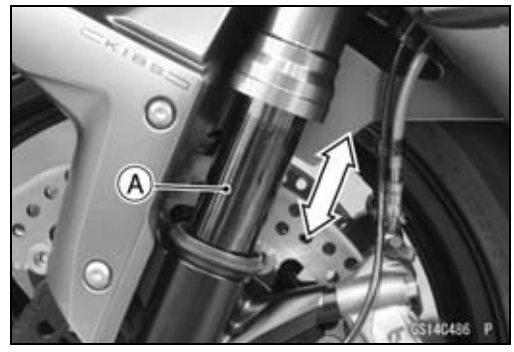

- Judge the front fork oil leakage as following table.

Oil Leakage Judgment List

Oil ring condition	Ref.	Oil leak or not	Remark
Observed oil film.	Photo [A]	(1) No oil leak	Normal oil film No repair required
Observed oil not clearly.	Photo [B]	(1) No oil leak	Grease is melting. No repair required
Observed oil ring.	Photo [C]	(2) Need re-judgment	Need to keep investigating.
Observed width oil ring is more than 3 mm (0.12 in.).	Photo [D]	(2) Need re-judgment	When oil film is glossy and oil is stick to hands as touching, oil is leaked.
Observed large oil ring or dripping oil.	Photo [E]	(3) Oil leak	Oil leak

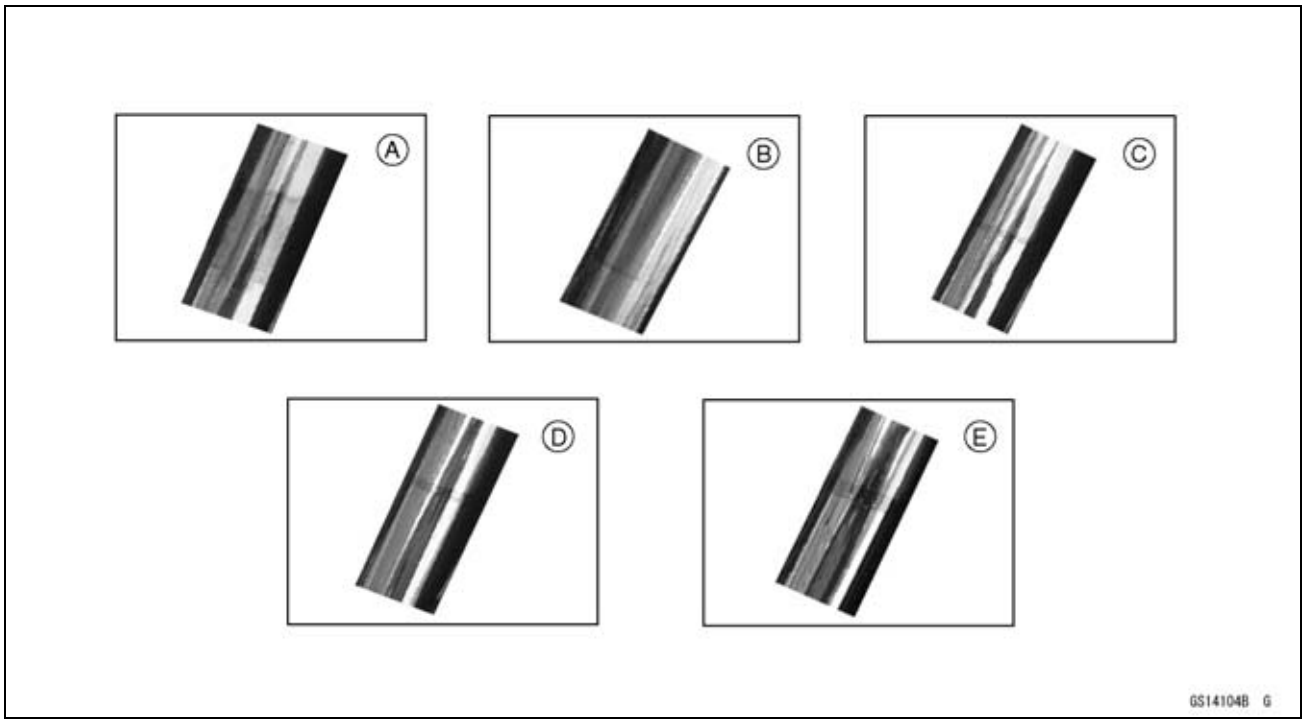

(1) No oil leak

- The oil seal is no problem. Install the dust seal.

(2) Need re-judgment

- After wiping of oil, pump the front fork down and up about 5 times.

★If oil leak is suspected, pump it down and up again. If the inner tube surface shows the condition like photo [E], judge as oil leak.

○In case the grease on seal makes this mark, the condition of photo [D] continues for several months, so need to judge carefully.

(3) Oil leak

- After inspecting the inner tube, replace the oil seal (see the Front Fork Disassembly in the Suspension chapter).
- After replacing the oil seal, conduct the judgment of the oil leak again.

NOTE

○*The cause of oil leak may be as follows.*
(1) The oil seal is deformed due to foreign particles into the oil seal. In this case, replace the oil seal.
(2) The inner tube is damaged. In this case, replace the inner tube.

- Before replacing the oil seal, check the inner tube surface for any scratch. Scratches can be detected by rubbing the surface with your finger nail. If there is a scratch, you can feel it by your nail.

Rear Shock Absorber Oil Leak Inspection

- Visually inspect the rear shock absorber [A] for oil leakage.

★If the oil leakage is found on it, replace the rear shock absorber with a new one.

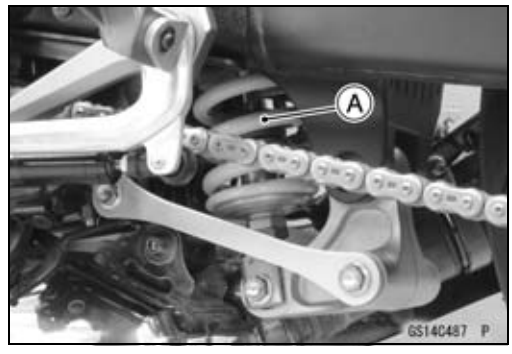

Rocker Arm Operation Inspection

- Pump the seat down and up 4 or 5 times, and inspect the smooth stroke.

★If the rocker arm [A] do not smoothly stroke or noise is found, inspect the fasteners and bearings (see Rocker Arm/Tie-Rod Bearing, Sleeve Inspection in the Suspension chapter).

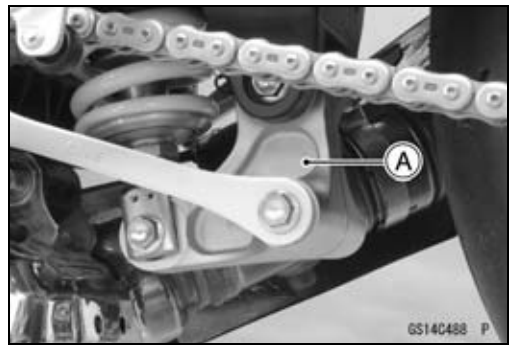

Periodic Maintenance Procedures

Tie-Rod Operation Inspection

- Pump the seat down and up 4 or 5 times, and inspect the smooth stroke.

★If the tie-rods [A] do not smoothly stroke or noise is found, inspect the fasteners and tie-rod bearings (see Rocker Arm/Tie-Rod Bearing, Sleeve Inspection in the Suspension chapter).

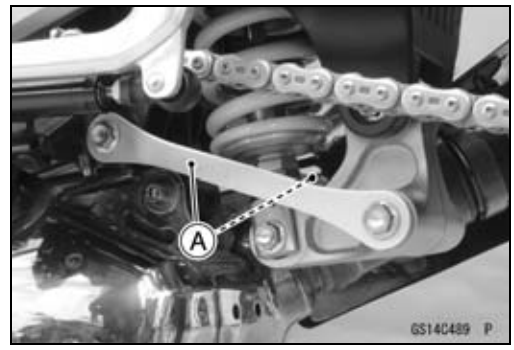

Lubrication of Rear Suspension

Tie-Rod Pivot Lubrication

- Remove:
  Tie-Rods [A] (see Tie-Rod Removal in the Suspension chapter)
  Grease Seals [B]
  Sleeves [C]
- Using a high flash-point solvent, clean the old grease out of the needle bearings [D].
- Apply plenty of grease to the inner surface of the needle bearings.
- Replace the grease seals with new ones.
- Apply grease to the oil seal lips.
- Install the removed parts (see appropriate chapters).

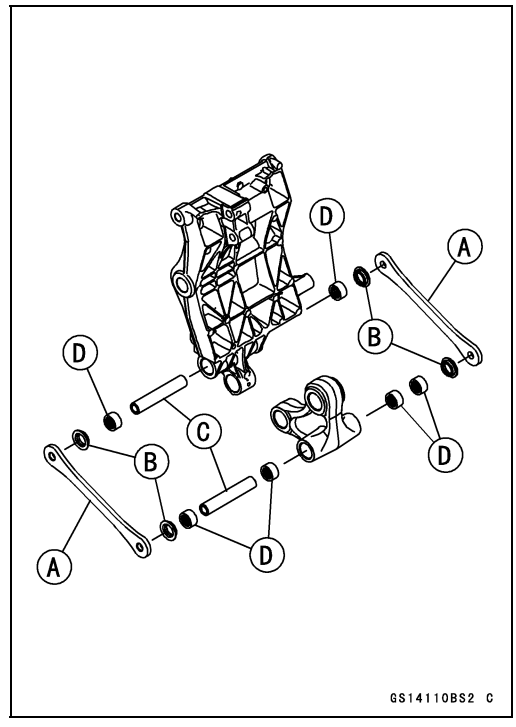

Steering

Steering Play Inspection

- Raise the front wheel off the ground with the front stand or the webbing sling.
- With the front wheel pointing straight ahead, alternately push each end of the handlebar. Confirm the front wheel should swing lightly left and right until the fork hits the stop.

★If the wheel binds or catches before the stop, the steering is too tight.

- Feel for steering looseness by pushing and pulling [A] the forks.

★If you feel looseness, the steering is too loose.

NOTE

○*The cables and wiring will have some effect on the motion of the fork which must be taken into account.*
○*Be sure the leads and cables are properly routed.*
○*The bearings must be in good condition and properly lubricated in order for any test to be valid.*

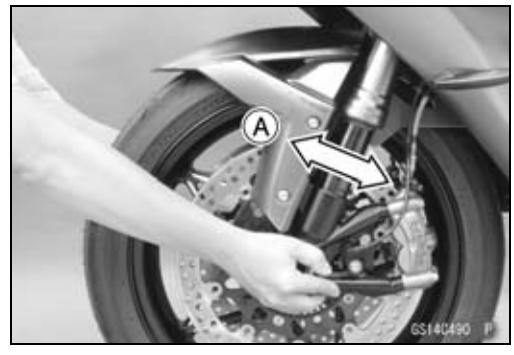

Periodic Maintenance Procedures

Steering Play Adjustment

- Remove:
  Steering Stem Head and Handlebars (see Handlebar Removal in the Steering chapter)
  Fuel Tank Covers (see Fuel Tank Cover Removal in the Frame chapter)
- Raise the motorcycle with the webbing sling.

- Straighten the claws [A] of the claw washer.
- Remove:
  Steering Stem Locknut [B]
  Claw Washer

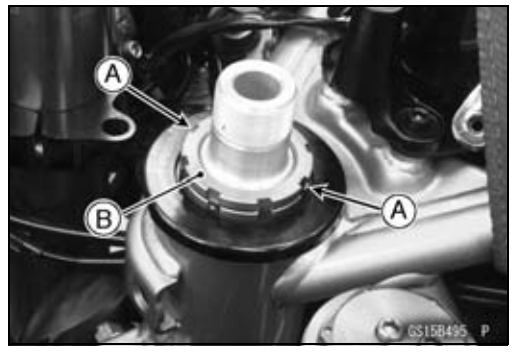

- Adjust the steering using the steering stem nut wrench [A].

Special Tool - Steering Stem Nut Wrench: 57001-1100

★If the steering is too tight, loosen the stem nut [B] a fraction of a turn.
★If the steering is too loose, tighten the stem nut a fraction of a turn.

NOTE

○*Turn the stem nut 1/8 turn at time maximum.*

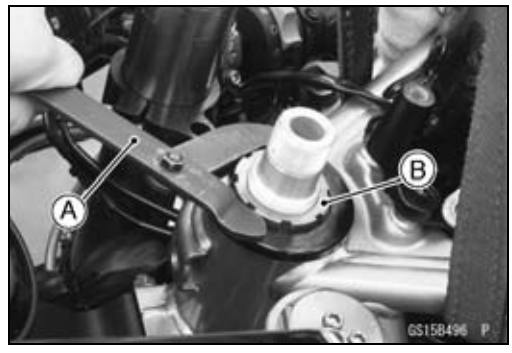

Periodic Maintenance Procedures

- Install the claw washer [A] so that its bent side [B] faces upward, and engage the bent claws with the grooves of stem locknut [C].
- Hand tighten the stem locknut until it touches the claw washer.
- Hand tighten the stem locknut clockwise until the claws are aligned with the second groove of stem nut [D], and bend the 2 claws downward.
- Install the stem head.
- Install the washer, and temporary tighten the stem head bolt.

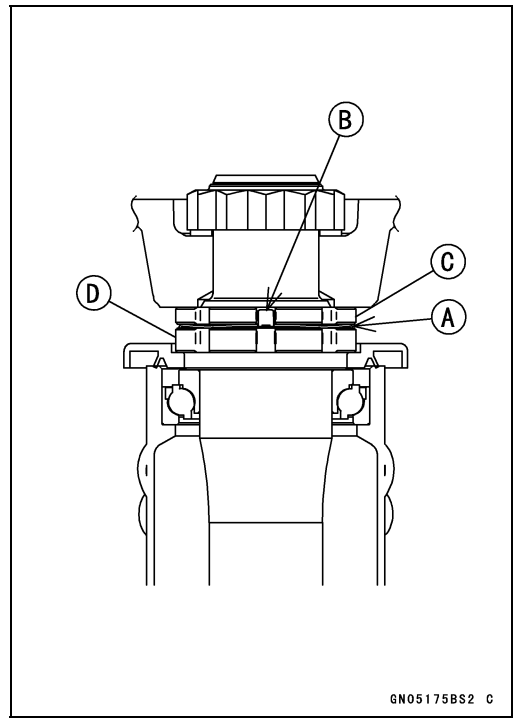

NOTE

○*Tighten the upper front fork clamp bolts first, next the stem head bolt.*

Torque - Upper Front Fork Clamp Bolts: 20 N·m (2.0 kgf·m, 15 ft·lb)
Steering Stem Head Nut: 78 N·m (8.0 kgf·m, 58 ft·lb)

⚠ WARNING

If the handlebars do not turn to the steering stop, they may cause an accident resulting in injury or death. Be sure the cables, harnesses and hoses are routed properly and do not interfere with handlebar movement (see Cable, Wire, and Hose Routing section in the Appendix chapter).

- Check the steering again.

★If the steering is still too tight or too loose, repeat the adjustment.

- Install the removed parts (see appropriate chapters).

Steering Stem Bearing Lubrication

- Remove the steering stem (see Stem, Stem Bearing Removal in the Steering chapter).
- Using a high flash-point solvent, wash the upper and lower ball bearings [A] in the cages, and wipe the upper and lower outer races, which are press-fitted into the frame head pipe, clean off grease and dirt.
- Visually check the outer races and the ball bearings.

★Replace the bearing assemblies if they show wear or damage.

- Pack the upper and lower ball bearings in the cages with grease, and apply a light coat of grease to the upper and lower outer races.
- Install the steering stem (see Stem, Stem Bearing Installation in the Steering chapter).
- Adjust the steering (see Steering Play Adjustment).

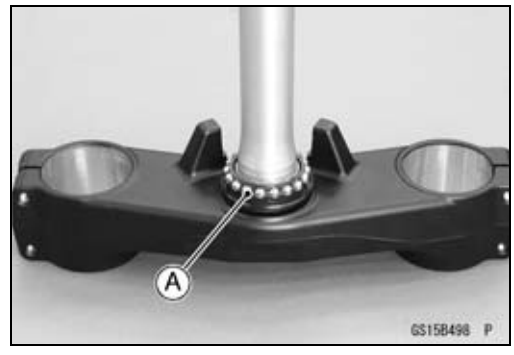

Periodic Maintenance Procedures

Electronic Steering Damper Oil Leak Inspection

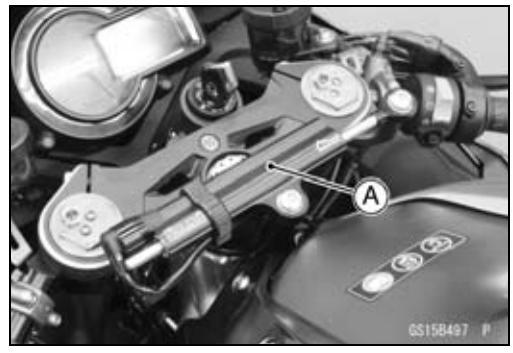

● Visually inspect the steering damper [A] for oil leakage.

★If the oil leakage is found on it, replace the steering damper with a new one (see Electronic Steering Damper Removal/Installation in the Steering chapter).

Periodic Maintenance Procedures

Electrical System

Lights and Switches Operation Inspection

First Step

- Set the gear position in the neutral position.
- Turn the ignition switch on.
- The following lights should go on according to below table.

City Lights (LED) [A]	Go on
Taillights (LED) [B]	Go on
License Plate Light [C]	Goes on
Meter Panel Illumination (LED) [D]	Goes on
Meter Panel LCD [E]	Goes on
Yellow ABS Indicator Light (LED) [F]	Goes on
Yellow Engine Warning Indicator Light (LED) [G]	Goes on
Green Neutral Indicator Light (LED) [H]	Goes on
Red Oil Pressure Warning Indicator Light (LED) [I]	Goes on

★If the light does not go on, inspect or replace the following parts.

Battery (see Charging Condition Inspection in the Electrical System chapter)
City Light (LED) (see City Light (LED) Removal/Installation in the Electrical System chapter)
License Plate Light Bulb (see License Plate Light Bulb Replacement in the Electrical System chapter)
Meter Panel LCD (see Meter Unit Inspection in the Electrical System chapter)
Green Neutral Indicator Light (LED) (see Meter Unit Inspection in the Electrical System chapter)
Red Oil Pressure Warning Indicator Light (LED) (see Meter Unit Inspection in the Electrical System chapter)
Meter Panel Illumination (LED) (see Meter Unit Inspection in the Electrical System chapter)
ECU (see ECU Power Supply Inspection in the Fuel System (DFI) chapter)
Main Fuse 30 A, Meter Fuse 10 A and Brake Light/Horn Fuse 10 A (see Fuse Inspection in the Electrical System chapter)
Ignition Switch (see Switch Inspection in the Electrical System chapter)
Oil Pressure Switch (see Switch Inspection in the Electrical System chapter)
Gear Position Sensor (see Gear Position Sensor Inspection in the Electrical System chapter)
Harness (see Wiring Inspection in the Electrical System chapter)
Yellow ABS Indicator Light (LED) (see Yellow ABS Indicator Light (LED) Inspection in the Brakes chapter)

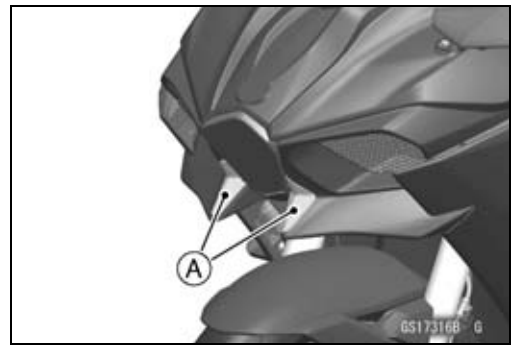

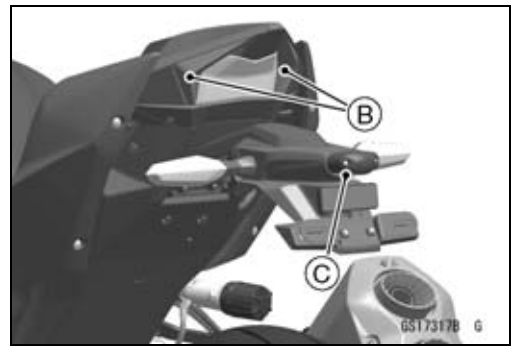

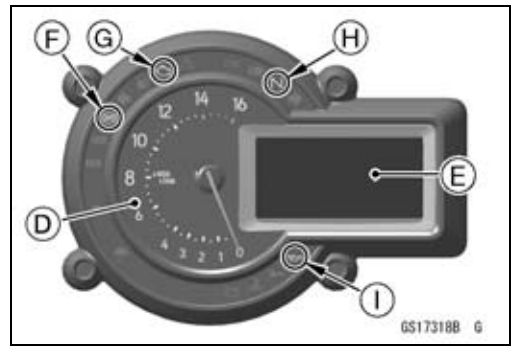

Periodic Maintenance Procedures

- Turn the ignition switch off.
- The all lights should go off.

○For models equipped with an immobilizer system, red immobilizer warning indicator light (LED) will blinks. Refer to the Immobilizer System (Equipped Models) section in the Electrical System chapter).

★If the light does not go off, replace the ignition switch.

Second Step (Other than US, CA and CAL Models)

- Turn the ignition switch to hazard position.
- The all lights should go off.

★If the light goes on, inspect or replace the following item.
Ignition Switch (see Switch Inspection in the Electrical System chapter)

Third Step

- Turn the ignition switch on.
- Turn on the turn signal switch [A] (left or right position).
- The left or right turn signal lights (LED) [B] (front and rear) according to the switch position should blink.
- The green turn signal indicators (LED) [C] in the meter unit should blink.

★If the each light does not blink, inspect or replace the following parts.
Front Turn Signal Lights (LED) (see Rear View Mirror Removal in the Frame chapter)
Rear Turn Signal Lights (LED) (see Flap Disassembly in the Frame chapter)
Green Turn Signal Indicator (LED) (see Meter Unit Inspection in the Electrical System chapter)
Turn Signal Relay Fuse 10 A (see Fuse Inspection in the Electrical System chapter)
Turn Signal Switch (see Switch Inspection in the Electrical System chapter)
Turn Signal Relay (see Turn Signal Relay Inspection in the Electrical System chapter)
Harness (see Wiring Inspection in the Electrical System chapter)

- Push the turn signal switch.
- The turn signal lights and green turn signal indicator (LED) should go off.

★If the light does not go off, inspect or replace the following parts.
Turn Signal Switch (see Switch Inspection in the Electrical System chapter)
Turn Signal Relay (see Turn Signal Relay Inspection in the Electrical System chapter)

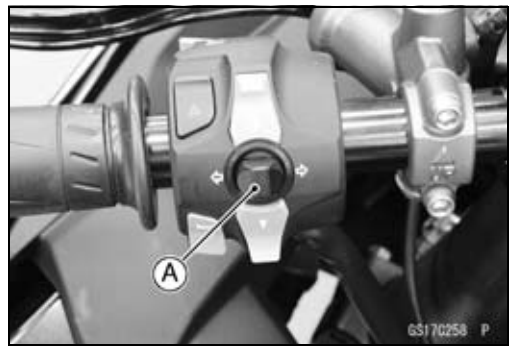

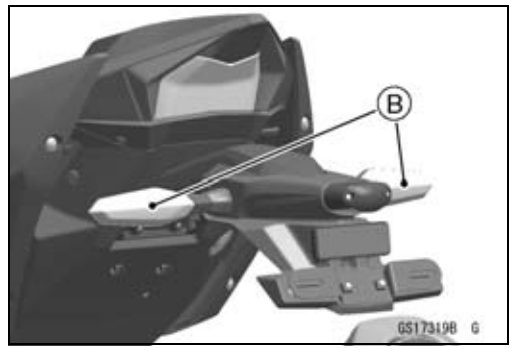

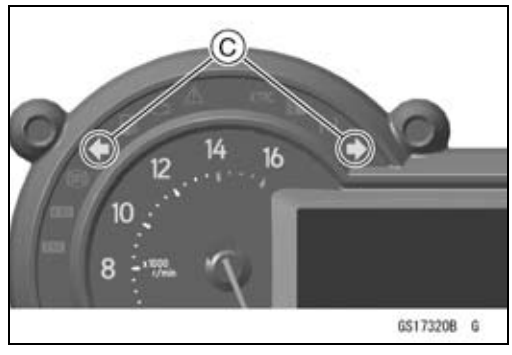

Periodic Maintenance Procedures

Fourth Step



- Set the dimmer switch [A] to low beam position.
- Start the engine.
- The low beam headlight should go on.

★If the low beam headlight does not go on, inspect or replace the following parts.
Headlight (LED) Assembly (see Headlight (LED) Assembly Removal/Installation in the Electrical System chapter)
Headlight Relay Fuse 10 A (see Fuse Inspection in the Electrical System chapter)
Dimmer Switch (see Switch Inspection in the Electrical System chapter)
Headlight Relay (see Relay Circuit Inspection in the Electrical System chapter)
Harness (see Wiring Inspection in the Electrical System chapter)

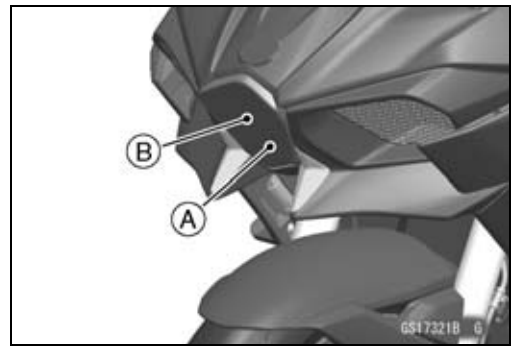

- Set the dimmer switch to high beam position.
- The low beam [A] and high beam [B] headlights should go on.
- The blue high beam indicator light (LED) [C] should goes on.

★If the high beam headlight and/or blue high beam indicator light (LED) does not go on, inspect or replace the following parts.
Headlight (LED) Assembly (see Headlight (LED) Assembly Removal/Installation in the Electrical System chapter)
Dimmer Switch (see Switch Inspection in the Electrical System chapter)

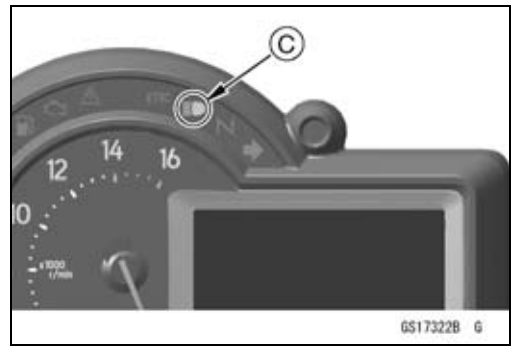

- Turn the engine stop switch to stop position.
- The low beam and high beam headlights should stay going on.

★If the headlights and blue high beam indicator light (LED) go off, inspect or replace the headlight relay (see Relay Circuit Inspection in the Electrical System chapter).

- Turn the ignition switch off.
- The headlights and blue high beam indicator light (LED) should go off.

Headlight Aiming Inspection

- Inspect the headlight beam for aiming.

★If the headlight beam points to one side rather than straight ahead, adjust the horizontal beam.

Periodic Maintenance Procedures

Headlight Beam Horizontal Adjustment

- Turn the horizontal adjuster [A] in both headlights in or out until the beam points straight ahead.

★If the headlight beam points too low or high, adjust the vertical beam.

Headlight Beam Vertical Adjustment

- Turn the vertical adjuster [B] in both headlights in or out to adjust the headlight vertically.

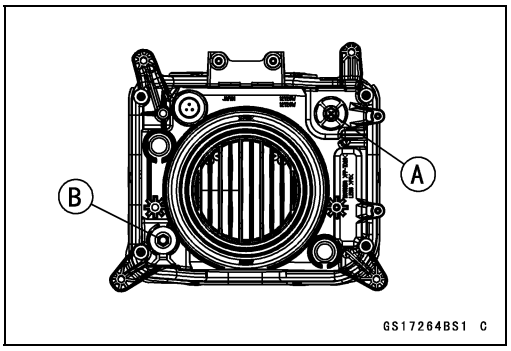

NOTE

○*On high beam, the brightest points should be slightly below horizontal with the motorcycle on its wheels and the rider seated. Adjust the headlight to the proper angle according to local regulations.*

○*For the US model, the proper angle is 0.4 degrees below horizontal. This is 50 mm (2.0 in.) drop at 7.6 m (25 ft) measured from the center of the headlight with the motorcycle on its wheels and the rider seated.*

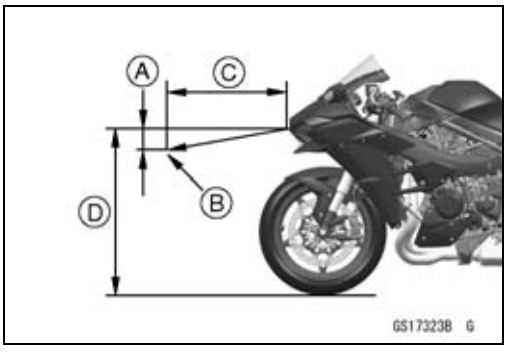

50 mm (2.0 in.) [A]
Center of Brightest Spot [B]
7.6 m (25 ft) [C]
Height of Headlight Center [D]

Side Stand Switch Operation Inspection

- Raise the rear wheel off the ground with the stand.
- Inspect the side stand switch [A] operation accordance to below table.



Side Stand Switch Operation

Side Stand	Gear Position	Clutch Lever	Engine Start	Engine Run
Up	Neutral	Released	Starts	Continue running
Up	Neutral	Pulled in	Starts	Continue running
Up	In Gear	Released	Does not start	Continue running
Up	In Gear	Pulled in	Starts	Continue running
Down	Neutral	Released	Starts	Continue running
Down	Neutral	Pulled in	Starts	Continue running
Down	In Gear	Released	Does not start	Stops
Down	In Gear	Pulled in	Does not start	Stops

Periodic Maintenance Procedures

★If the side stand switch operation does not work, inspect or replace the following parts.
Battery (see Charging Condition Inspection in the Electrical System chapter)
Main Fuse 30 A (see Fuse Inspection in the Electrical System chapter)
Ignition Fuse 15 A (see Fuse Inspection in the Electrical System chapter)
Ignition Switch (see Switch Inspection in the Electrical System chapter)
Side Stand Switch (see Switch Inspection in the Electrical System chapter)
Engine Start/Stop Switch (see Switch Inspection in the Electrical System chapter)
Gear Position Sensor (see Gear Position Sensor Inspection in the Electrical System chapter)
Starter Lockout Switch (see Switch Inspection in the Electrical System chapter)
Starter Relay (see Starter Relay Inspection in the Electrical System chapter)
Relay Box (see Relay Circuit Inspection in the Electrical System chapter)
Starter Circuit Relay (see Relay Circuit Inspection in the Electrical System chapter)
Harness (see Wiring Inspection in the Electrical System chapter)

★If the all parts are good condition, replace the ECU (see ECU Removal/Installation in the Fuel System (DFI) chapter).

Engine Start/Stop Switch Operation Inspection

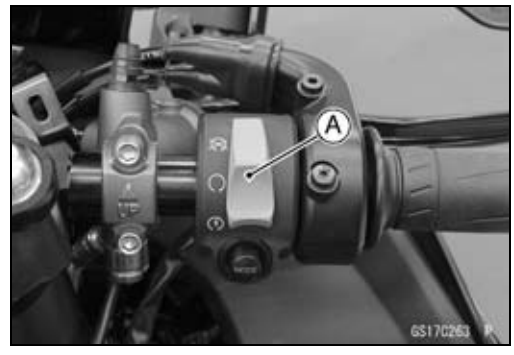

- Turn the ignition switch on.
- Set the gear position in the neutral position.
- Set the engine start/stop switch to run position [A].
- Slide the start/stop switch down and start the engine.
- Set the engine start/stop switch to stop position.
- Immediately the engine should be stop.

★If the engine does not stop, inspect or replace the engine start/stop switch (see Switch Inspection in the Electrical System chapter).

★If the engine start/stop switch is good condition, replace the ECU (see ECU Removal/Installation in the Fuel System (DFI) chapter).

Spark Plug Condition Inspection

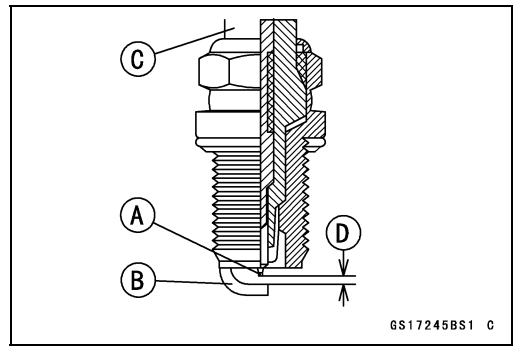

- Remove the spark plugs (see Spark Plug Replacement).
- Visually inspect the spark plugs.

★If the spark plug center electrode [A] and/or side electrode [B] are corroded or damaged, or if the insulator [C] is cracked, replace the plug.

★If the spark plug is dirtied or the carbon is accumulated, replace the spark plug.

- Measure the gap [D] with a wire-type thickness gauge.

★If the gap is incorrect, replace the spark plug.

Spark Plug Gap: 0.8 ~ 0.9 mm (0.031 ~ 0.035 in.)

- Use the standard spark plug.

Periodic Maintenance Procedures

Spark Plug Replacement



- Remove the stick coils (see Stick Coil Removal in the Electrical System chapter).
- Remove the spark plugs using the 14 mm (0.55 in.) plug wrench [A] vertically.
- Replace the spark plugs with new ones.

Standard Spark Plug
Type: NGK SILMAR9B9

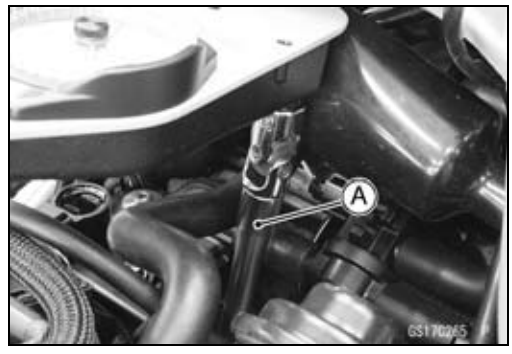

- Insert the spark plug vertically into the spark plug hole with the spark plug installed in the plug wrench [A], and finger-tighten it first.

NOTICE
If tightening the spark plug with the wrench inclined, the insulator of the spark plug may break.

- Tighten:

Torque - Spark Plugs: 13 N·m (1.3 kgf·m, 115 in·lb)

- Install the stick coils (see Stick Coil Installation in the Electrical System chapter).
- After installation, be sure the stick coils are installed securely by pulling up them lightly.

Supercharger

Supercharger Oil Screen Replacement

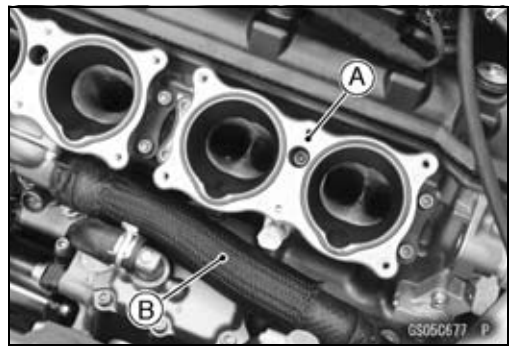

- Remove:
  Throttle Body Assy (see Throttle Body Assy Removal in the Fuel System (DFI) chapter)
  Air Cleaner Housing (see Air Cleaner Housing Removal in the Fuel System (DFI) chapter)
  Right Throttle Body Assy Holder [A] (see Throttle Body Assy Holder Removal in the Engine Top End chapter)
- Drain the coolant (see Coolant Change).
- Slide the clamp and remove the water hose [B].

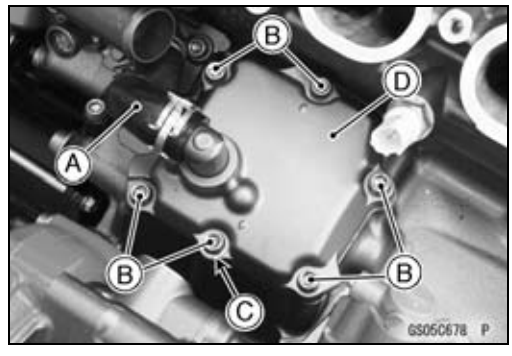

- Slide the clamp and disconnect the breather hose [A].
- Remove:
  Breather Cover Bolts [B]
  Washer [C]
  Breather Cover [D]

Periodic Maintenance Procedures

- Put the clean cloth [A] to prevent from dropping out the parts into the crankcase.
- Remove:
  Supercharger Oil Screen Bolt [B]
  Supercharger Oil Screen [C]

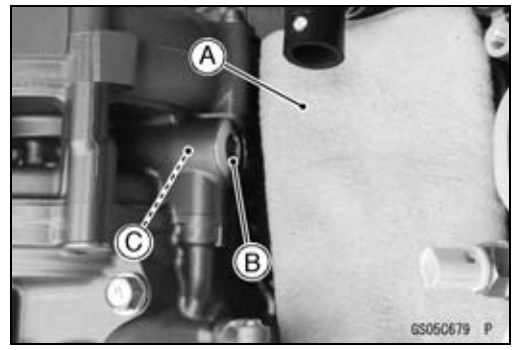

- Clean the threads [A].
- Replace the supercharger oil screen [B] and supercharger oil screen bolt [C] with new ones.
- Install the supercharger oil screen, and tighten the supercharger oil screen bolt.

Torque - Supercharger Oil Screen Bolt: 20 N·m (2.0 kgf·m, 15 ft·lb)

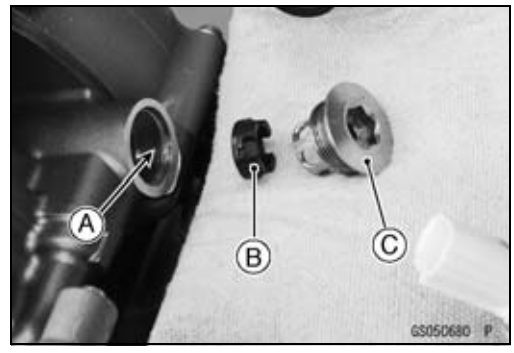

- Replace the breather cover gasket and washer [A] with new ones.
- Install:
  Gasket
  Breather Cover [B]
  Washer
- Tighten:

Torque - Breather Cover Bolts [C]: 10 N·m (1.0 kgf·m, 89 in·lb)

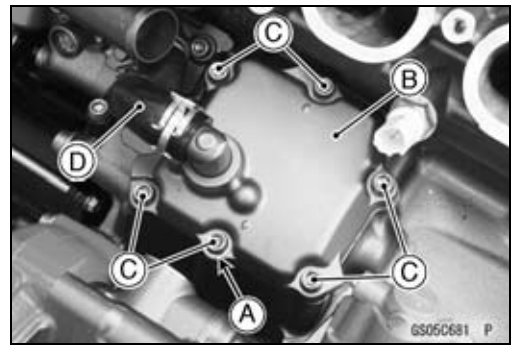

- Connect the breather hose [D].
- Install the removed parts (see appropriate chapters).
- Fill the coolant (see Coolant Change in the Periodic Maintenance chapter).

Supercharger Impeller Axial Play Inspection

- Remove:
  Air Cleaner Element (see Air Cleaner Element Replacement)
  Footpeg Bracket Bolts [A]
  Footpeg Bracket [B]

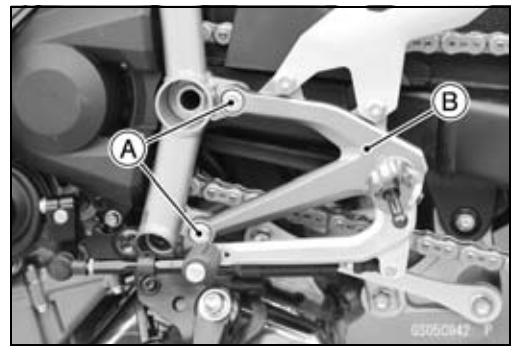

Periodic Maintenance Procedures

- Install the dial gauge holder plate [A] and tighten it with the removed bolts [B] securely.

  Special Tool - Dial Gauge Holder Plate: 57001-1834

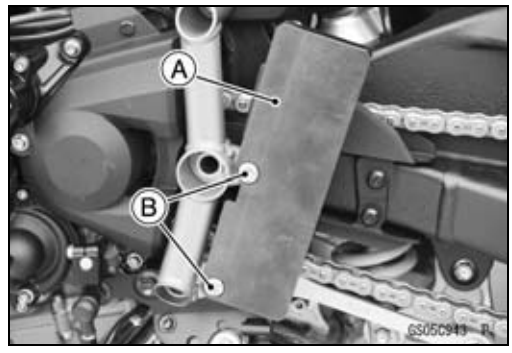

- Install the suitable rubber tubes [A] into the needle-nose pliers [B].

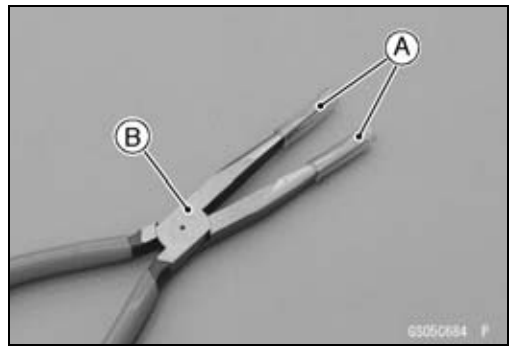

- Confirm that the impeller [A] can be held by the pliers [B] before inspecting the axial play.

NOTICE
If dirt gets into the supercharger, possible supercharger damage will occur.

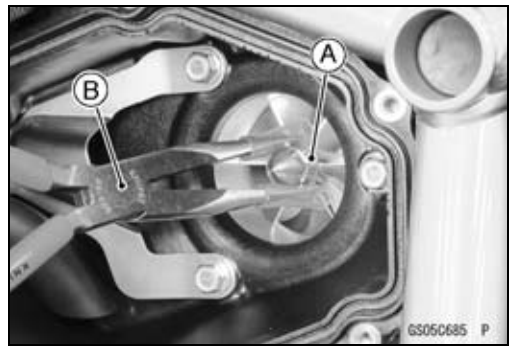

- Mount a dial gauge [A] on the dial gauge holder plate [B].



- Fit the dial gauge tip [A] to the center of the impeller [B].

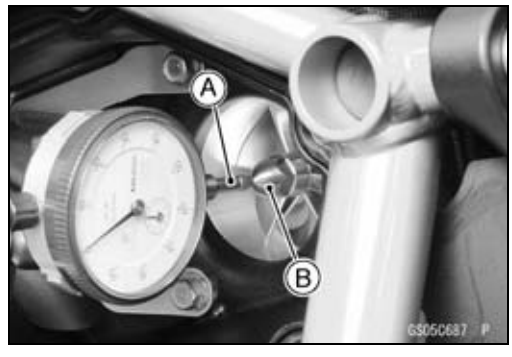

Periodic Maintenance Procedures

● Measure the supercharger impeller axial play [A] using the pliers [B].

Supercharger Impeller Axial Play
Service Limit: 0.5 mm (0.02 in.)

★ If the supercharger impeller axial play exceeds the service limit, replace the supercharger impeller housing assy.

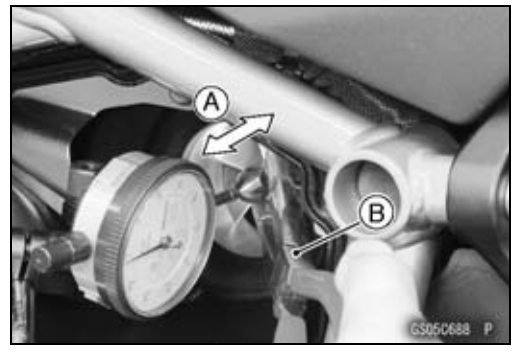

Others

Chassis Parts Lubrication

● Before lubricating each part, clean off any rusty spots with rust remover and wipe off any grease, oil, dirt, or grime.
● Lubricate the points listed below with indicated lubricant.

NOTE

○*Whenever the vehicle has been operated under wet or rainy conditions, or especially after using a high-pressure water spray, perform the general lubrication.*

Pivots: Lubricate with Grease.
Brake Lever
Brake Pedal
Clutch Lever
Rear Master Cylinder Push Rod Joint Pin
Side Stand

Points: Lubricate with Grease.
Throttle Inner Cable Upper and Lower Ends [A]

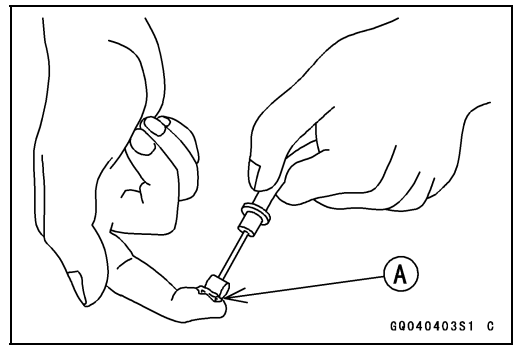

Cables: Lubricate with Rust Inhibitor.
Throttle Cables
● Lubricate the cables by seeping the oil between the cable and housing.
○The cable may be lubricated by using a commercially available pressure cable lubricator with an aerosol cable lubricant.

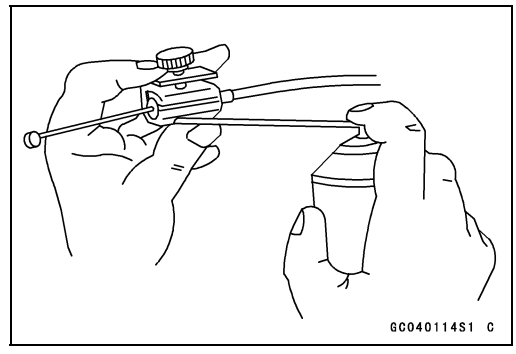

Periodic Maintenance Procedures

- With the cable disconnected at both ends, the inner cable should move freely [A] within the cable housing.

★If cable movement is not free after lubricating, if the cable is frayed [B], or if the cable housing is kinked [C], replace the cable.

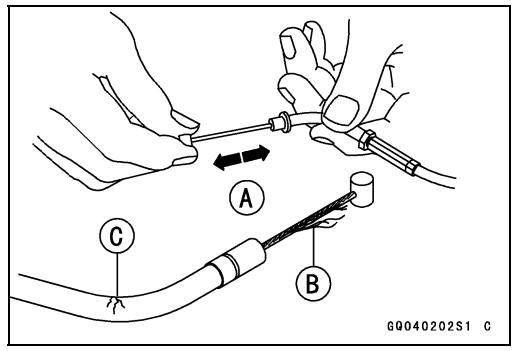

Condition of Bolts, Nuts and Fasteners Tightness Inspection

- Check the tightness of the bolts and nuts listed here. Also, check to see that each cotter pin is in place and in good condition.

NOTE

○*For the engine fasteners, check the tightness of them when the engine is cold (at room temperature).*

★If there are loose fasteners, retighten them to the specified torque following the specified tightening sequence. Refer to the appropriate chapter for torque specifications. If torque specifications are not in the appropriate chapter, see the Standard Torque Table. For each fastener, first loosen it by 1/2 turn, then tighten it.

★If cotter pins are damaged, replace them with new ones.

Periodic Maintenance Procedures

Bolt, Nut and Fastener to be checked

Engine:
- Clutch Lever Pivot Bolt Locknut
- Engine Mounting Bolts and Nuts
- Exhaust Pipe Holder Nuts
- Muffler Body Clamp Bolts
- Muffler Body Mounting Bolt
- Exhaust Pipe Mounting Bolt
- Radiator Mounting Bolts

Wheels:
- Front Axle Clamp Bolts
- Front Axle Nut
- Rear Axle Nuts
- Rear Wheel Nuts

Brakes:
- Brake Lever Pivot Bolt Locknut
- Brake Pedal Bolt
- Caliper Mounting Bolts
- Front Master Cylinder Clamp Bolts
- Rear Master Cylinder Mounting Bolts
- Rear Master Cylinder Push Rod Joint Cotter Pin

Suspension:
- Front Fork Clamp Bolts
- Rear Shock Absorber Nuts
- Swingarm Pivot Shaft Nut
- Tie-rod Nuts
- Rocker Arm Nut

Steering:
- Handlebar Clamp Bolts
- Steering Stem Head Nut

Others:
- Footpeg Bracket Bolts
- Front Fender Mounting Bolts
- Rear Frame Bolts
- Side Stand Bolt
- Side Stand Bracket Bolts

Fuel System (DFI)

Table of Contents

Exploded View 3-4
DFI System 3-10
DFI Components Naming 3-12
DFI Parts Location 3-20
Specifications 3-24
Special Tools and Sealants 3-25
DFI Servicing Precautions 3-26
DFI Servicing Precautions 3-26
Troubleshooting the DFI System 3-28
Outline 3-28
Inquiries to Rider 3-32
DFI System Troubleshooting Guide 3-35
Warning Indicator Light (LED) 3-40
Yellow Engine Warning Indicator Light (LED) Inspection 3-40
ECU 3-41
ECU Identification 3-41
ECU Removal 3-41
ECU Installation 3-42
ECU Power Supply Inspection 3-42
DFI Power Source 3-45
ECU Fuse Removal 3-45
ECU Fuse Installation 3-45
ECU Fuse Inspection 3-45
ECU Main Relay Removal/Installation 3-45
ECU Main Relay Inspection 3-45
Fuel Line 3-46
Fuel Pressure Inspection 3-46
Fuel Flow Rate Inspection 3-47
Fuel Pump 3-49
Fuel Pump Removal 3-49
Fuel Pump Installation 3-50
Fuel Pump Operation Inspection 3-50
Fuel Pump Operating Voltage Inspection 3-51
Pressure Regulator Removal 3-52
Fuel Pump Relay Removal/Installation 3-52
Fuel Pump Relay Inspection 3-52
Fuel Injectors 3-53
Primary Fuel Injector Removal/Installation 3-53
Secondary Fuel Injector Removal/Installation 3-53
Primary Fuel Injector Audible Inspection 3-53
Fuel Injector Resistance Inspection 3-53
Fuel Injector Power Source Voltage Inspection 3-53
Fuel Injector Output Voltage Inspection 3-53
Fuel Injector Fuel Line Inspection 3-53
Throttle Grip and Cables 3-54
Free Play Inspection 3-54
Free Play Adjustment 3-54
Cable Installation 3-54
Cable Lubrication 3-54
Air Intake Chamber 3-55

Air Intake Chamber Removal 3-55
Air Intake Chamber Installation 3-57
Blow-off Valve Removal 3-59
Blow-off Valve Installation 3-59
Blow-off Valve Inspection 3-59
Purge Valve (for Supercharger) Removal/Installation 3-59
Purge Valve (for Supercharger) Inspection 3-59
Throttle Body Assy 3-60
Idle Speed Inspection/Adjustment 3-60
Synchronization Inspection 3-60
Throttle Body Assy Removal 3-60
Throttle Body Assy Installation 3-62
Throttle Body Assy Disassembly 3-63
Throttle Body Assy Assembly 3-64
Nozzle Assy 3-66
Nozzle Assy Removal 3-66
Nozzle Assy Installation 3-66
Nozzle Assy Disassembly 3-66
Nozzle Assy Assembly 3-67
Air Cleaner 3-68
Air Cleaner Element Removal/Installation 3-68
Air Cleaner Element Inspection 3-68
Air Cleaner Oil Draining 3-68
Air Cleaner Housing Removal 3-68
Air Cleaner Housing Installation 3-70
Supercharger 3-71
Supercharger Chain Tensioner Removal 3-71
Supercharger Chain Tensioner Installation 3-71
Supercharger Housing Assy Removal 3-72
Supercharger Housing Assy Installation 3-74
Supercharger Outer Housing Removal 3-76
Supercharger Outer Housing Installation 3-76
Fuel Tank 3-78
Fuel Tank Removal 3-78
Fuel Tank Installation 3-80
Fuel Tank and Cap Inspection 3-82
Fuel Tank Cleaning 3-82
Evaporative Emission Control System (Other than US, CA Models) 3-83
Parts Removal/Installation 3-83
Hose Inspection 3-83
Purge Valve Inspection 3-83
Canister Inspection 3-83

This page intentionally left blank.

Exploded View

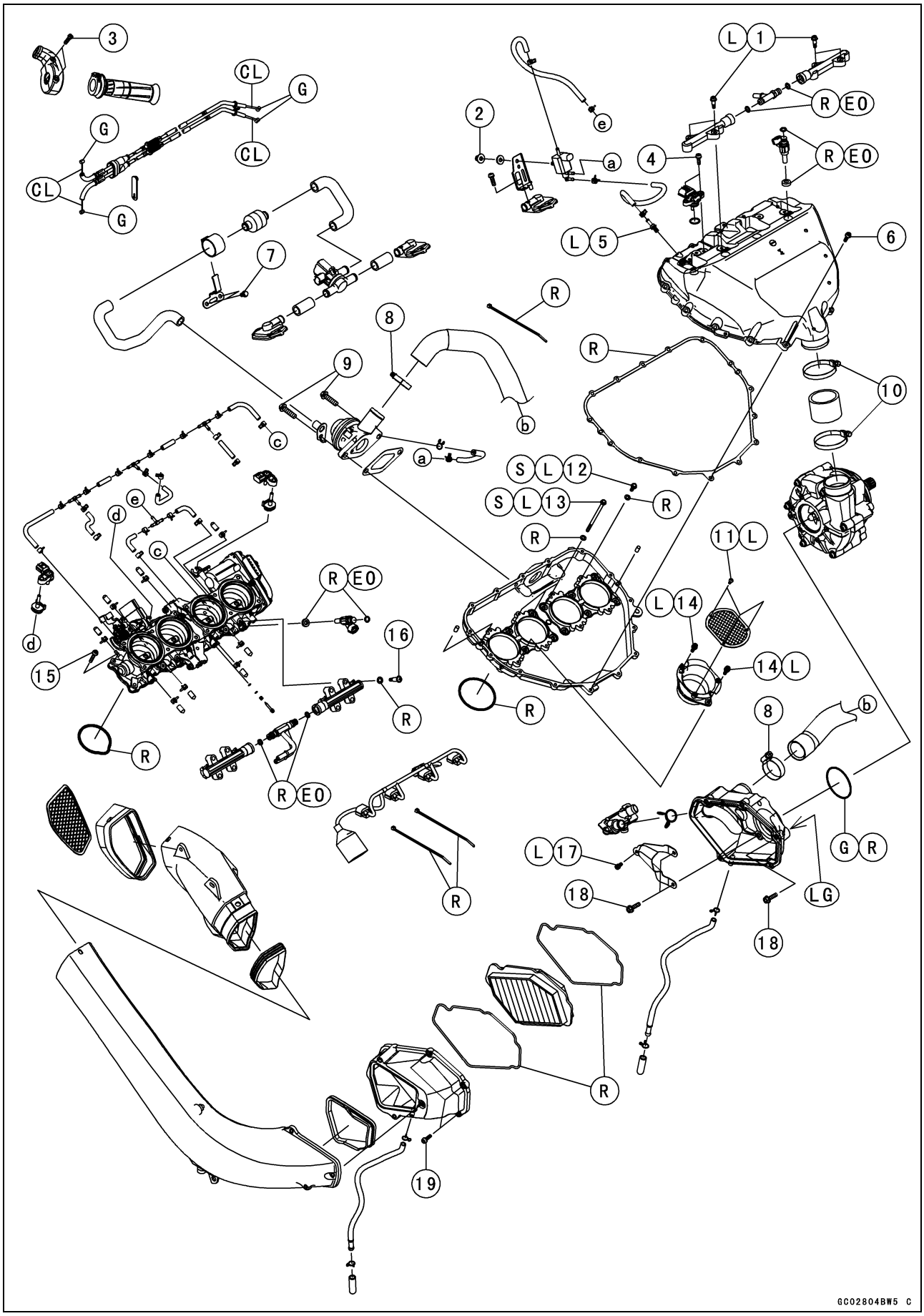

Exploded View

No.	Fastener	Torque			Remarks
		N·m	kgf·m	ft·lb	
1	Nozzle Assy Mounting Bolts	6.5	0.66	58 in·lb	L
2	Purge Valve Nut	7.0	0.71	62 in·lb	
3	Throttle Case Bolts	3.5	0.36	31 in·lb	
4	Air Intake Chamber Pressure/Temperature Sensor Bolts	5.0	0.51	44 in·lb	
5	Air Hose Fitting	10	1.0	89 in·lb	L
6	Air Intake Chamber Bolts	8.0	0.82	71 in·lb	
7	Air Switching Valve Filter Bracket Bolts	9.8	1.0	87 in·lb	
8	Blow-off Valve Hose Clamp Screw	3.0	0.31	27 in·lb	
9	Blow-off Valve Bolts	25	2.5	18	
10	Air Intake Hose Clamp Screw	3.0	0.31	27 in·lb	
11	Air Intake Chamber Duct Screen Bolts	3.0	0.31	27 in·lb	L
12	Air Intake Chamber Mounting Bolts (L = 14 mm)	8.0	0.82	71 in·lb	L, S
13	Air Intake Chamber Mounting Bolts (L = 95 mm)	8.0	0.82	71 in·lb	L, S
14	Air Intake Chamber Duct Bolts	6.0	0.61	53 in·lb	L
15	Throttle Body Assy Mounting Bolts	10	1.0	89 in·lb	
16	Delivery Pipe Assy Mounting Screws	3.5	0.36	31 in·lb	
17	Air Cleaner Housing Inner Plate Bolt	6.0	0.61	53 in·lb	L
18	Air Cleaner Housing Mounting Bolts	10	1.0	89 in·lb	
19	Air Cleaner Housing Cover Bolts	6.0	0.61	53 in·lb	

CL: Apply cable lubricant.
EO: Apply engine oil.
G: Apply grease.
L: Apply a non-permanent locking agent.
LG: Apply liquid gasket.
R: Replacement Parts

Exploded View

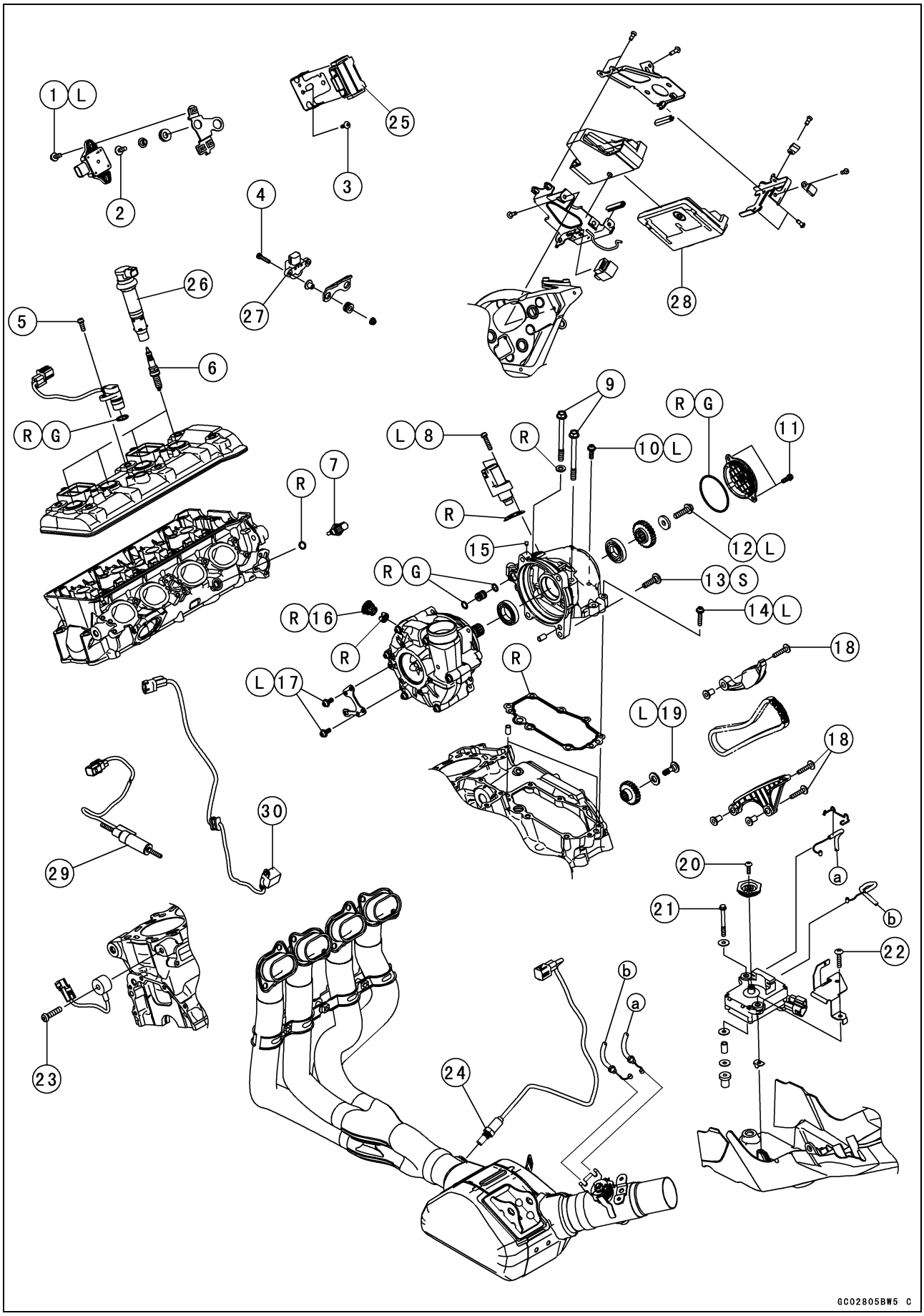

Exploded View

No.	Fastener	Torque			Remarks
		N·m	kgf·m	ft·lb	
1	IMU Mounting Bolts	6.5	0.66	58 in·lb	L
2	IMU Bracket Bolts	6.9	0.70	61 in·lb	
3	Immobilizer Amplifier Bracket Screw	1.2	0.12	11 in·lb	
4	Vehicle-down Sensor Mounting Bolts	5.9	0.60	52 in·lb	
5	Camshaft Position Sensor Bolt	10	1.0	89 in·lb	
6	Spark Plugs	13	1.3	115 in·lb	
7	Water Temperature Sensor	12	1.2	106 in·lb	
8	Supercharger Chain Tensioner Mounting Bolts	10	1.0	89 in·lb	L
9	Supercharger Housing Bolts (M8)	23	2.3	17	
10	Supercharger Housing Bolt (M6, L = 20 mm)	10	1.0	89 in·lb	L
11	Supercharger Sprocket Cover Bolts	10	1.0	89 in·lb	
12	Supercharger Chain Sprocket Bolt (Upper)	25	2.5	18	L
13	Supercharger Outer Housing Bolts	23	2.3	17	S
14	Supercharger Housing Bolts (M6, L = 30 mm)	10	1.0	89 in·lb	L
15	Supercharger Housing Nozzle	3.0	0.31	27 in·lb	
16	Supercharger Oil Screen Bolt	20	2.0	15	R
17	Supercharger Housing Stay Bolts	10	1.0	89 in·lb	L
18	Supercharger Chain Guide Bolts	10	1.0	89 in·lb	
19	Supercharger Chain Sprocket Bolt (Lower)	20	2.0	15	L
20	Exhaust Butterfly Valve Actuator Pulley Bolt	5.0	0.51	44 in·lb	
21	Exhaust Butterfly Valve Actuator Mounting Bolt	1.0	0.10	8.9 in·lb	
22	Exhaust Butterfly Valve Actuator Mounting Screw	1.2	0.12	11 in·lb	
23	Knock Sensor Bolt	25	2.5	18	
24	Oxygen Sensor	25	2.5	18	

25. Immobilizer System Equipped Models
26. Stick Coil
27. Vehicle-down Sensor
28. ECU
29. Quick Shifter Sensor
30. Crankshaft Sensor

G: Apply grease.
L: Apply a non-permanent locking agent.
R: Replacement Parts

Exploded View

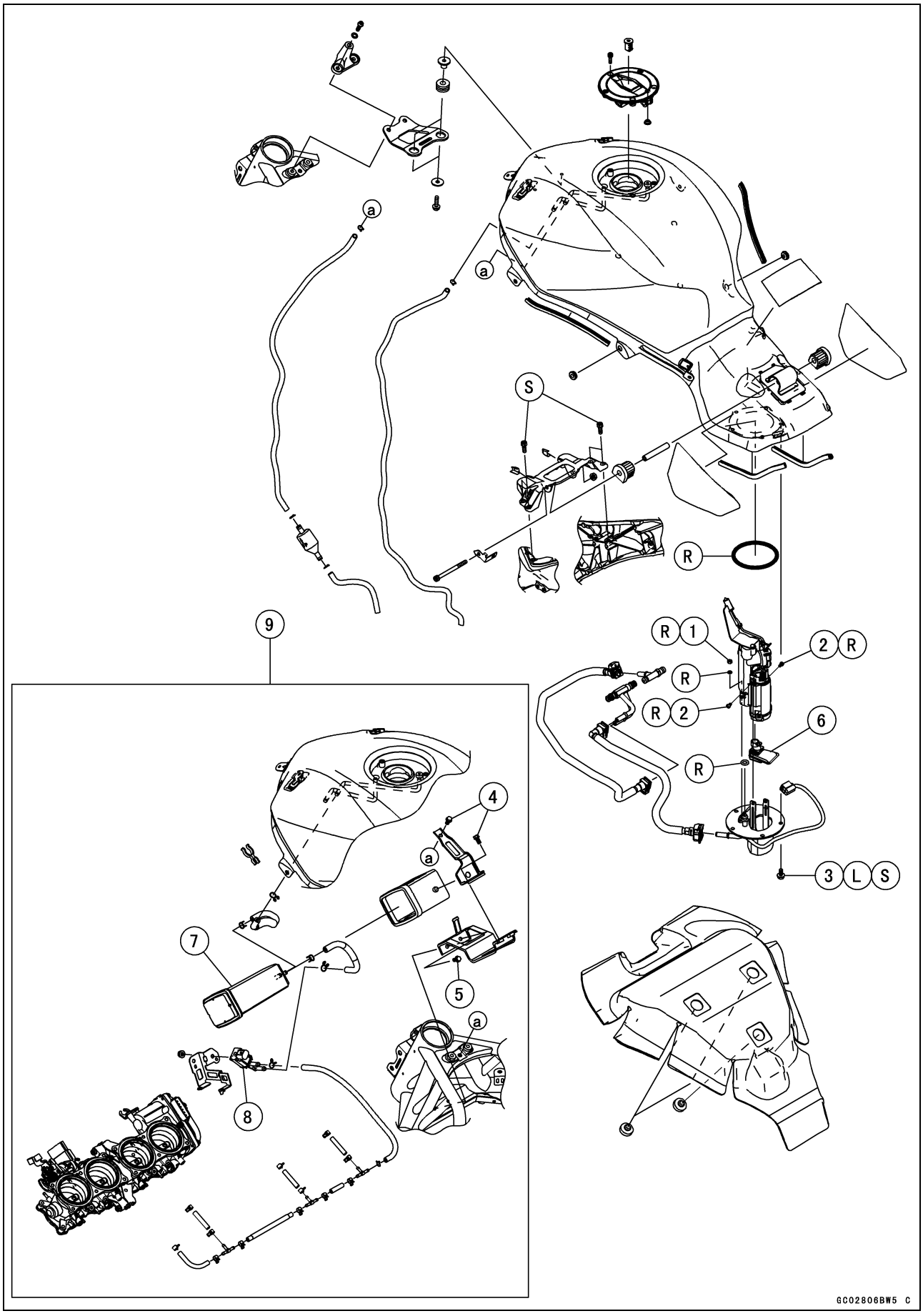

Exploded View

No.	Fastener	Torque			Remarks
		N·m	kgf·m	ft·lb	
1	Fuel Pump Terminal Nuts	0.98	0.10	8.7 in·lb	R
2	Fuel Pump Assembly Screws	0.98	0.10	8.7 in·lb	R
3	Fuel Pump Bolts	10	1.0	89 in·lb	L, S
4	Canister Upper Bracket Bolts	9.0	0.92	80 in·lb	
5	Canister Lower Bracket Bolts	9.8	1.0	87 in·lb	

6. Fuel Filter
7. Canister
8. Purge Valve
9. Other than US, CA Models

L: Apply a non-permanent locking agent.
R: Replacement Parts
S: Follow the specified tightening sequence.

DFI System

DFI System

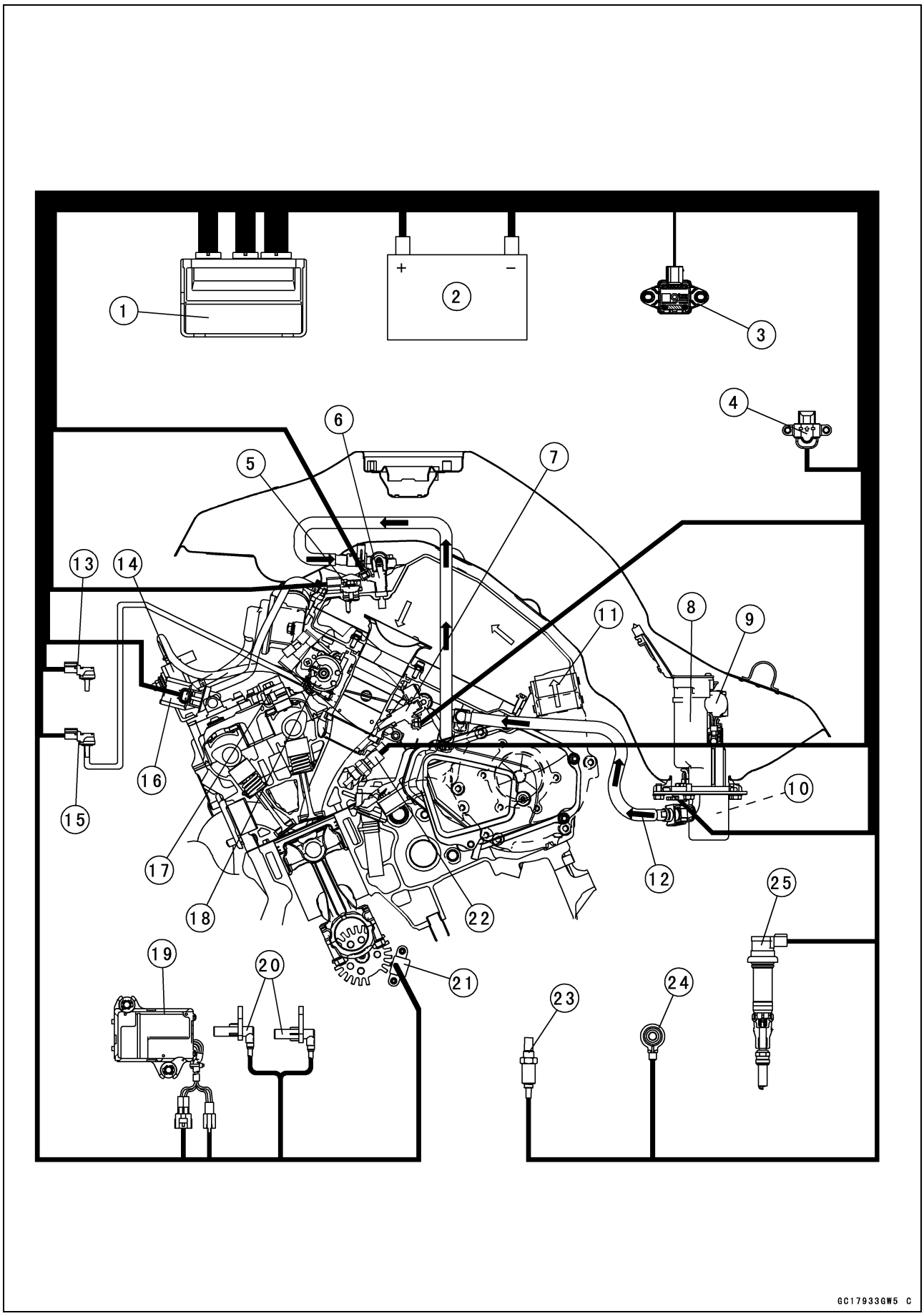

DFI System

1. ECU
2. Battery 12 V 8.6 Ah
3. IMU
4. Vehicle-down Sensor
5. Air Intake Chamber Pressure/Temperature Sensor
6. Secondary Fuel Injectors
7. Primary Fuel Injectors
8. Fuel Pump
9. Pressure Regulator
10. Fuel Filter
11. Air Flow
12. Fuel Flow
13. Atmospheric Pressure Sensor
14. Purge Valve (for Supercharger)
15. Intake Air Pressure Sensor
16. Air Switching Valve Actuator
17. Camshaft Position Sensor
18. Accelerator Position Sensor, Throttle Position Sensor, ETV Actuator
19. Exhaust Butterfly Valve Actuator
20. Wheel Rotation Sensors
21. Crankshaft Sensor
22. Water Temperature Sensor
23. Oxygen Sensor
24. Knock Sensor
25. Stick Coils

DFI System

DFI Components Naming

The terms used in the European regulation for DFI components are sometimes different from those used by Kawasaki. Use this table to cross reference terms which may appear in a generic scan tool when diagnosing the DFI system.

Sensors described in R44/2014 (Description per ISO 15031-6 in the parentheses)	Kawasaki Name
Accelerator (pedal/handle) position sensor (Throttle/Pedal Position sensor/switch “D”)	Accelerator position sensor
Accelerator (pedal/handle) position sensor (Throttle/Pedal Position sensor/switch “E”)	Accelerator position sensor
Barometric pressure sensor (Barometric pressure circuit)	Intake air pressure sensor #2
Camshaft position sensor (Camshaft position sensor “A”)	Camshaft position sensor
Crankshaft position sensor (Crankshaft position sensor “A”)	Crankshaft sensor
Engine coolant temperature sensor (Engine coolant temperature sensor 1)	Water temperature sensor
Exhaust control valve angle sensor (Exhaust pressure control valve position sensor)	Exhaust butterfly valve actuator sensor
Gear shift position sensor (Gear Shift Position Circuit)	Gear position sensor
Intake air temperature sensor (Intake air temperature sensor 1)	Intake air temperature sensor
Knock sensor (Knock sensor)	Knock sensor
Manifold absolute pressure sensor (Manifold absolute pressure/barometric pressure circuit)	Intake air pressure sensor #1
Manifold absolute pressure sensor (Turbocharger/Supercharger Boost Sensor “A”)	Air Intake Chamber Pressure/Temperature Sensor
O_2 sensor (binary/linear) signals (O_2 sensor)	Oxygen sensor
Throttle position sensor (Throttle/Pedal position sensor/switch “A”)	Throttle position sensor
Throttle position sensor (Throttle/Pedal position sensor/switch “B”)	Throttle position sensor
Wheel speed sensor (Vehicle speed sensor “A”)	Front wheel rotation sensor
Vehicle speed sensor (Vehicle speed sensor “B”)	Rear wheel rotation sensor

Actuators described in R44/2014 (Description per ISO 15031-6 in the parentheses)	Kawasaki Name
Evaporative emission system purge control valve (Evaporative emission system purge control valve)	Purge valve
Exhaust control valve actuator (motor driven) (Exhaust pressure control valve)	Exhaust butterfly valve actuator
Fuel injector (Injector - cylinder 1 ~ 8)	Primary fuel injector Secondary fuel injector
Ignition coil primary control circuits (Ignition coil “A ~ D” primary / secondary circuit)	Stick coil
O_2 sensor heater (HO_2S heater control circuit)	Oxygen sensor heater

DFI System

Actuators described in R44/2014 (Description per ISO 15031-6 in the parentheses)	Kawasaki Name
Secondary air injection system (Secondary air injection system)	Air switching valve
Throttle by wire actuator (Throttle actuator control motor circuit)	ETV actuator

DFI System

DFI System Wiring Diagram

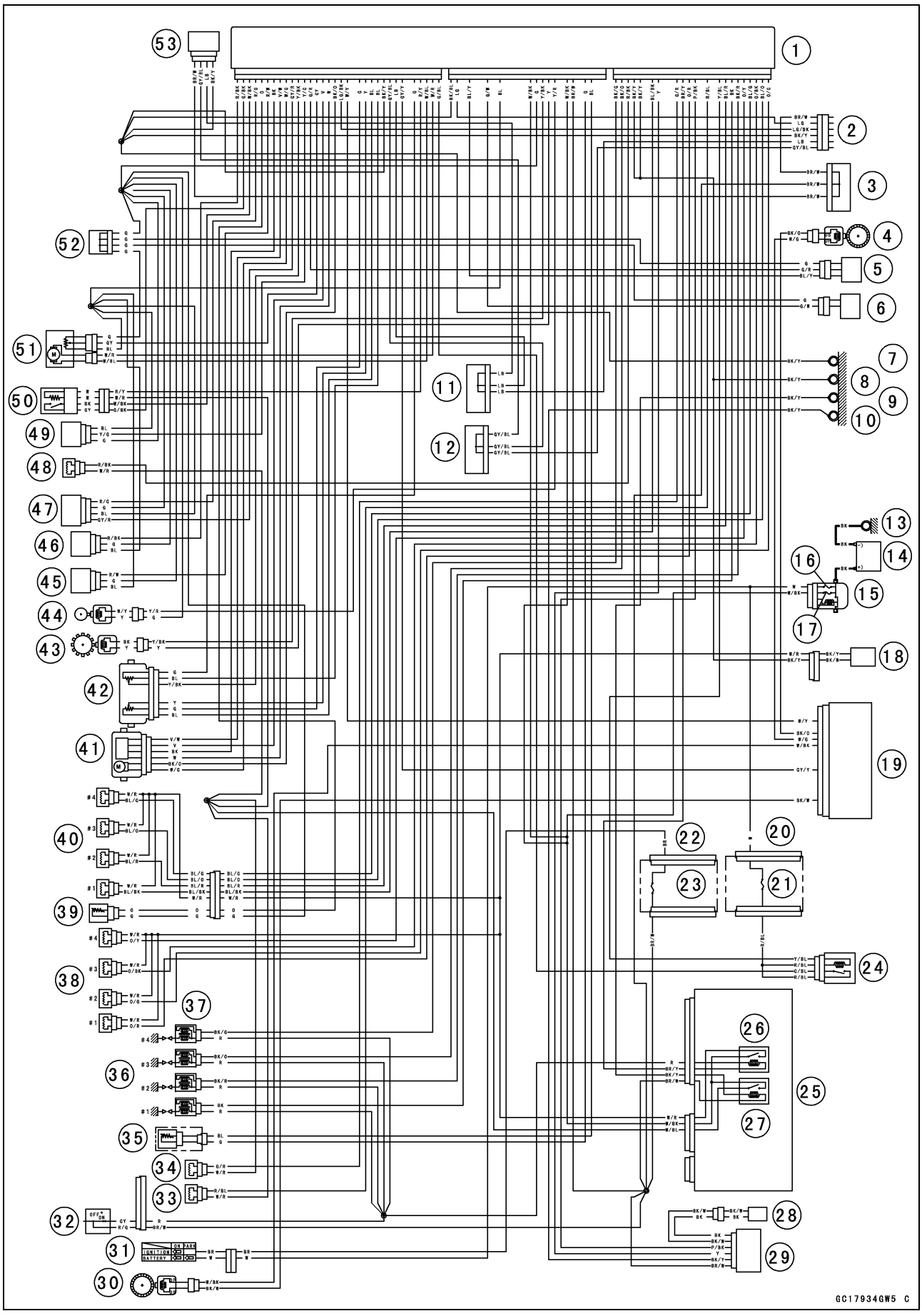

DFI System

Part Names

1. ECU
2. Immobilizer (Equipped Models)/Kawasaki Diagnostic System Connector
3. Joint Connector F
4. Rear Wheel Rotation Sensor
5. Gear Position Sensor
6. Quick Shifter Sensor
7. Frame Ground (4)
8. Frame Ground (3)
9. Frame Ground (2)
10. Frame Ground (1)
11. Joint Connector H
12. Joint Connector I
13. Engine Ground
14. Battery 12 V 8.6 Ah
15. Starter Relay
16. Main Fuse 30 A
17. ECU Fuse 15 A
18. Fuel Pump
19. ABS Hydraulic Unit
20. Fuse Box (2)
21. ETV Actuator Relay Fuse 10 A
22. Fuse Box (1)
23. Ignition Fuse 15 A
24. ETV Actuator Relay
25. Relay Box
26. Fuel Pump Relay
27. ECU Main Relay
28. Immobilizer Antenna (Equipped Models)
29. Immobilizer Amplifier (Equipped Models)
30. Front Wheel Rotation Sensor
31. Ignition Switch
32. Engine Start/Stop Switch
33. Air Switching Valve
34. Purge Valve (Other than US, CA Models)
35. Knock Sensor
36. Spark Plugs
37. Stick Coils
38. Secondary Fuel Injectors
39. Water Temperature Sensor
40. Primary Fuel Injectors
41. Throttle Position Sensor/ETV Actuator
42. Accelerator Position Sensor
43. Crankshaft Sensor
44. Camshaft Position Sensor
45. Atmospheric Pressure Sensor
46. Intake Air Pressure Sensor
47. Air Intake Chamber Pressure/Temperature Sensor
48. Purge Valve (for Supercharger)
49. Vehicle-down Sensor
50. Oxygen Sensor
51. Exhaust Butterfly Valve Actuator
52. Joint Connector G
53. IMU

DFI System

○Color Codes:

BK: Black	GY: Gray	PU: Purple
BL: Blue	LB: Light Blue	R: Red
BR: Brown	LG: Light Green	V: Violet
CH: Chocolate	O: Orange	W: White
DG: Dark Green	P: Pink	Y: Yellow
G: Green		

DFI System

This page intentionally left blank.

DFI System

Terminal Numbers of ECU Connectors

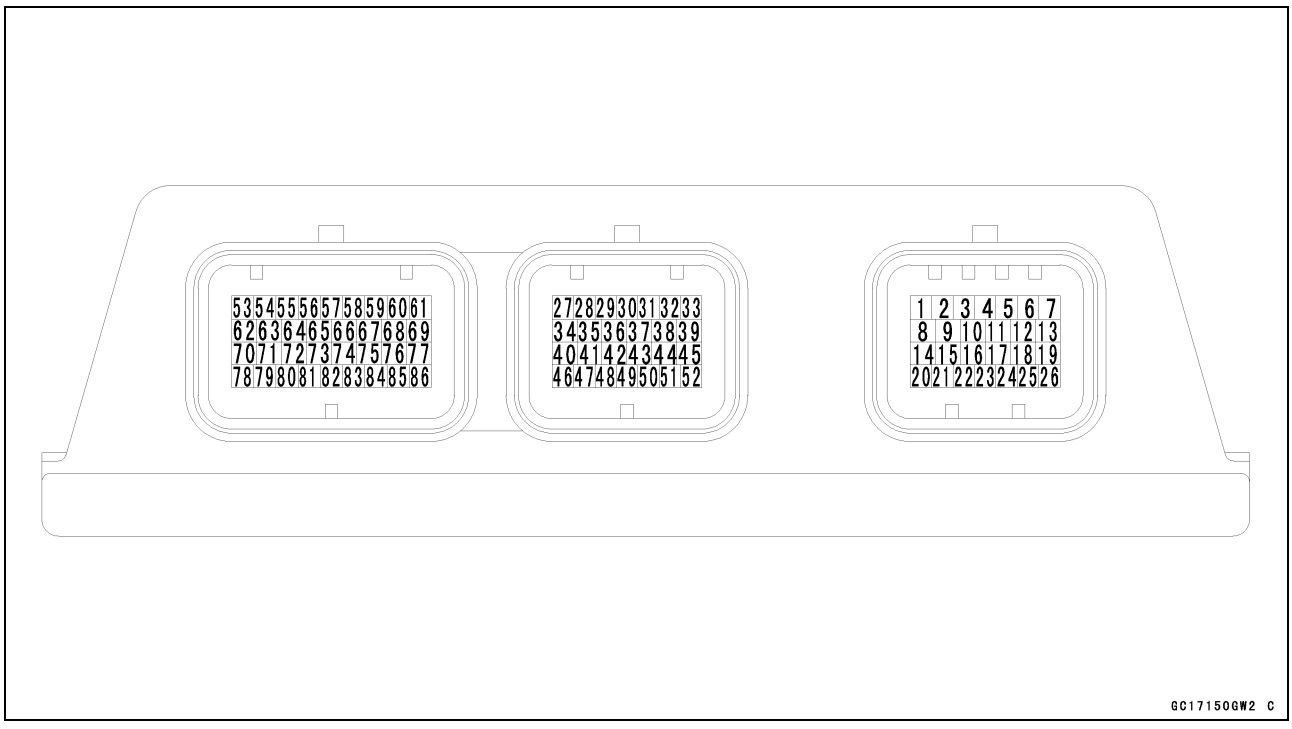

Terminal Names

1. Secondary Fuel Injector #2: O/G
2. Primary Fuel Injector #3: BL/O
3. Secondary Fuel Injector #3: O/BK
4. Primary Fuel Injector #4: BL/G
5. Secondary Fuel Injector #4: O/Y
6. Ignition Coil #2: BK/R
7. Ignition Coil #1: BK
8. Primary Fuel Injector #2: BL/R
9. ETV Actuator Relay: Y/BL
10. Unused
11. Air Switching Valve: R/BL
12. Unused
13. Immobilizer Amplifier (Equipped Models): P/BK
14. Secondary Fuel Injector #1: O/R
15. Fuel Pump Relay: BR/Y
16. Purge Valve (Other than US, CA Models): G/R
17. Unused
18. Radiator Fan Relay: P/BL
19. Immobilizer Amplifier (Equipped Models): Y
20. Primary Fuel Injector #1: BL/BK
21. Green Neutral Indicator Light (LED): LG
22. Engine Ground: BK/Y
23. Engine Ground: BK/Y
24. Purge Valve (for Supercharger): R/BK
25. Ignition Coil #3: BK/O
26. Ignition Coil #4: BK/G
27. Unused
28. Unused
29. Knock Sensor (+): BL
30. Knock Sensor (–): G
31. Unused
32. Ignition Switch: BR/W
33. Power Supply to ECU (from Battery): W/BK
34. Unused

35. Camshaft Position Sensor: Y/R
36. Crankshaft Sensor (+): Y
37. Crankshaft Sensor (–): Y/BK
38. Ground for Sensor: G
39. Power Supply to ECU (from Battery): W/BK
40. Side Stand Switch: G/BK
41. Starter Lockout Switch: R/G
42. Starter Switch: BK/R
43. Unused
44. Power Supply to Sensors: BL
45. Battery Monitor Voltage Line: W/R
46. Quick Shifter Sensor: G/W
47. Unused
48. Unused
49. Power Supply to Sensors: BL/Y
50. Unused
51. External Communication Line (Immobilizer System (Equipped Models)/*KDS): LG
52. Ground for Control System: BK/BL
53. ETV Actuator (+): G/BL
54. Exhaust Butterfly Valve Actuator (+): W/R
55. Exhaust Butterfly Valve Actuator (–): W/BL
56. Oxygen Sensor Heater: R/Y
57. Accelerator Position Sensor 1 (–): G
58. Unused
59. Front Wheel Rotation Sensor: GY/Y
60. CAN Communication Line (Low): LB
61. CAN Communication Line (High): GY/BL
62. ETV Actuator (–): BK/Y
63. Accelerator Position Sensor 1 (+): BL
64. Accelerator Position Sensor 2 (+): BL
65. Accelerator Position Sensor 2: Y
66. Accelerator Position Sensor 2 (–): G
67. Unused
68. Rear Wheel Rotation Sensor: W/Y
69. External Communication Line (Immobilizer System (Equipped Models)/*KDS): LG/BK
70. ETV Actuator (–): BK/O
71. Power Supply to Throttle Position Sensor: W
72. Throttle Position Sensor 1: V
73. Exhaust Butterfly Valve Actuator Sensor: GY
74. Gear Position Sensor: G/R
75. Vehicle-down Sensor: Y/G
76. Accelerator Position Sensor 1: Y/BK
77. Intake Air Temperature Sensor (Air Intake Chamber): GY/R
78. ETV Actuator (+): W/G
79. Throttle Position Sensor 2: V/W
80. Ground for Throttle Position Sensor: BK
81. Atmospheric Pressure Sensor: R/W
82. Water Temperature Sensor: O
83. Intake Air Pressure Sensor (Air Intake Chamber): R/G
84. Oxygen Sensor: W/BK
85. Ground for Oxygen Sensor: G/BK
86. Intake Air Pressure Sensor: R/BK

*: KDS (Kawasaki Diagnostic System)

DFI Parts Location

Ignition Key [A] (Transponder, Immobilizer System Equipped Models)
Immobilizer Antenna [B] (Equipped Models)
Ignition Switch [C]
Electronic Steering Damper [D]

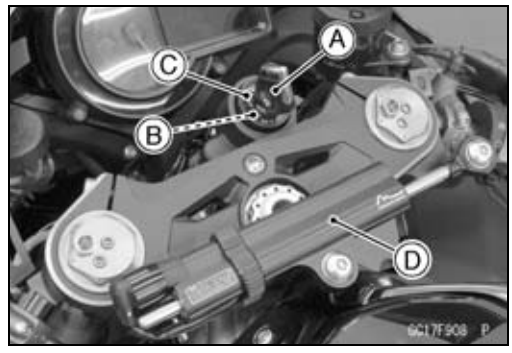

ECU [A]
Immobilizer Amplifier [B] (Equipped Models)
ETV Actuator Relay [C]
Fuse Box (1) [D]

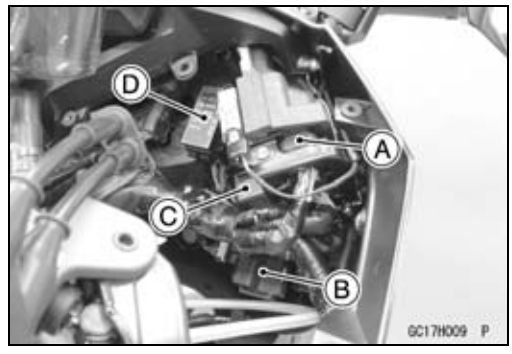

Vehicle-down Sensor [A]
Relay Box [B] (ECU Main Relay, Fuel Pump Relay, Radiator Fan Relay)
Electronic Steering Damper ECU [C]
IMU [D]

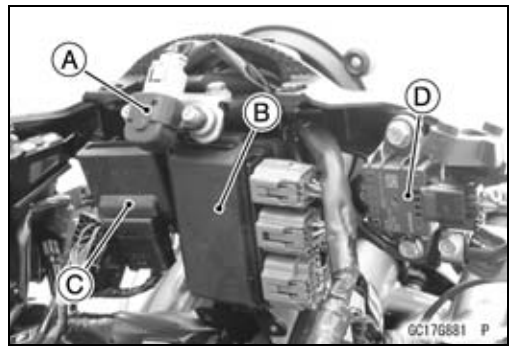

Air Switching Valve [A]
Purge Valve [B] (for Supercharger)
Stick Coils #1, #2, #3, #4 [C]
Camshaft Position Sensor [D]

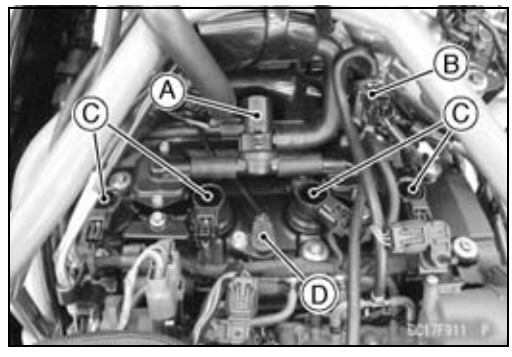

Atmospheric Pressure Sensor [A]
Intake Air Pressure Sensor [B]
Accelerator Position Sensor [C]
Throttle Potion Sensor/ETV Actuator [D]
Primary Fuel Injectors #1, #2, #3, #4 [E]

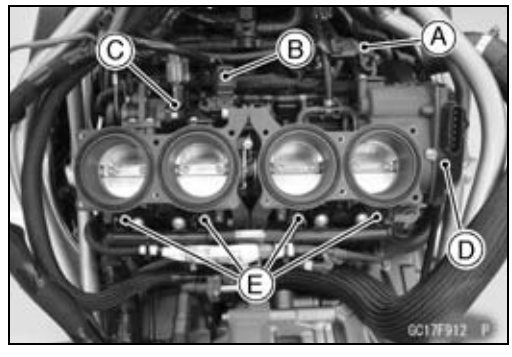

DFI Parts Location

Secondary Fuel Injectors #1, #2, #3, #4 [A]
Air Intake Chamber Pressure/Temperature Sensor [B]

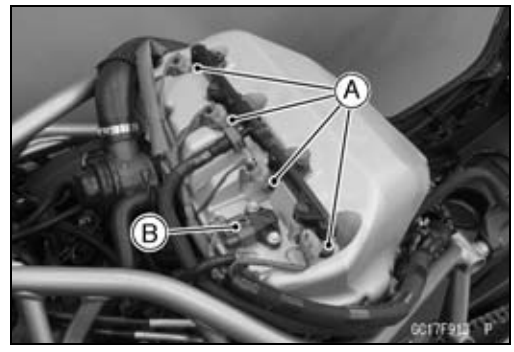

Exhaust Butterfly Valve Actuator [A]

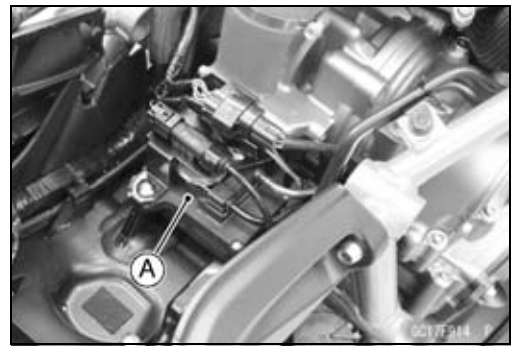

Immobilizer (Equipped Models)/Kawasaki Diagnostic System Connector [A]
Battery [B]
Fuse Box (2) [C]

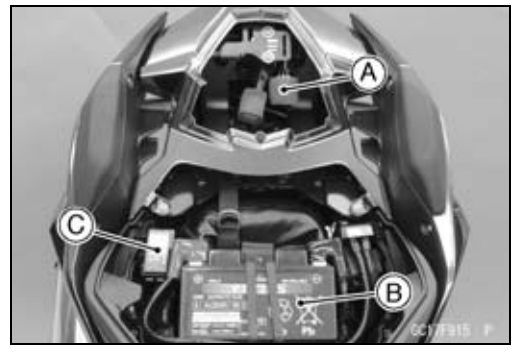

Main Fuse 30 A [A]
ECU Fuse 15 A [B]

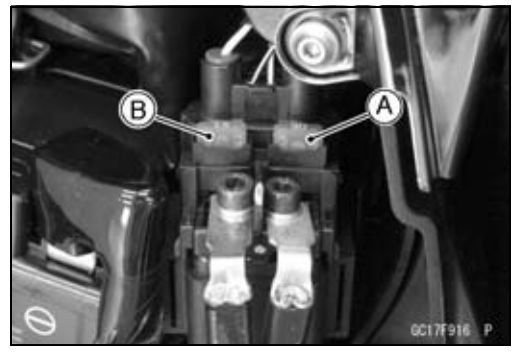

Quick Shifter Sensor [A]



DFI Parts Location

Crankshaft Sensor [A]
Oxygen Sensor [B]

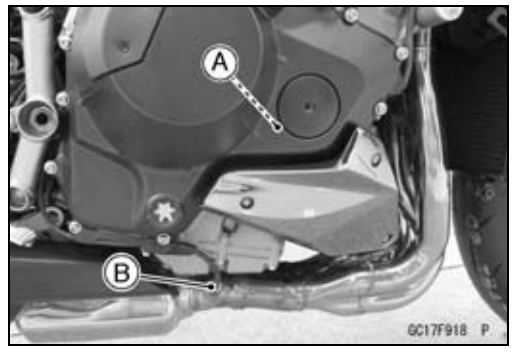

Front Wheel Rotation Sensor [A]

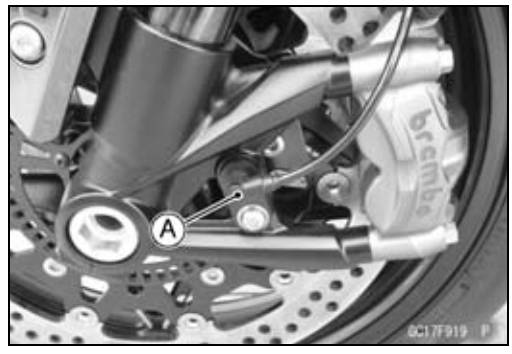

Rear Wheel Rotation Sensor [A]

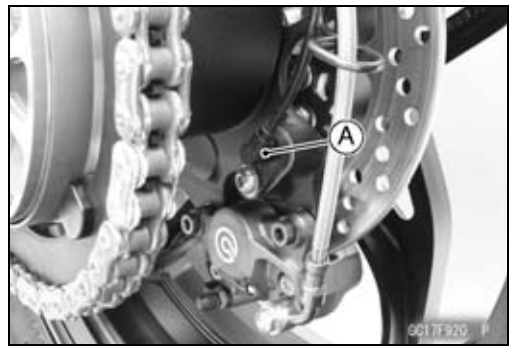

Fuel Pump [A]



Water Temperature Sensor [A]



DFI Parts Location

Knock Sensor [A]



Purge Valve [A] (for Evaporative Emission Control System) (Other than US, CA Models)

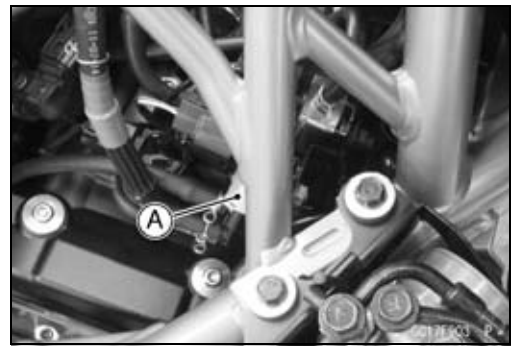

Yellow Engine Warning Indicator Light (LED) [A]

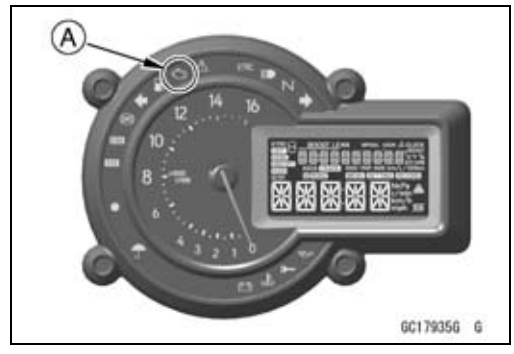

Specifications

Item	Standard
Digital Fuel Injection System	
Idle Speed	1 100 ±100 r/min (rpm)
Throttle Body Assy:	
Throttle Valve	Single throttle valve
Bore	ϕ50 mm (2.0 in.)
Throttle Body Vacuum	33.3 ±2.7 kPa (250 ±20 mmHg) @75°C (167°F) or more (at idle speed)
ECU:	
Make	MITSUBISHI
Type	Digital memory type, with built in IC igniter, sealed with resin
Fuel Pressure (High Pressure Line)	380 kPa (3.9 kgf/cm², 55 psi) with engine idling
Fuel Pump:	
Type	In-tank friction pump
Discharge	83 mL (2.8 US oz.) or more for 3 seconds
Primary Fuel Injectors:	
Type	EAT803 (US, CA) EAT816
Nozzle Type	Fine atomizing type with 12 holes (US, CA) Fine atomizing type with 4 holes
Resistance	About 11.7 ~ 12.3 Ω @20°C (68°F)
Secondary Fuel Injectors:	
Type	EAT816
Nozzle Type	Fine atomizing type with 4 holes
Resistance	About 11.7 ~ 12.3 Ω @20°C (68°F)
Throttle Grip and Cables	
Throttle Grip Free Play	2 ~ 3 mm (0.08 ~ 0.12 in.)
Air Cleaner	
Element	Viscous paper element

Special Tools and Sealants

Oil Pressure Gauge, 5 kgf/cm²:
57001-125

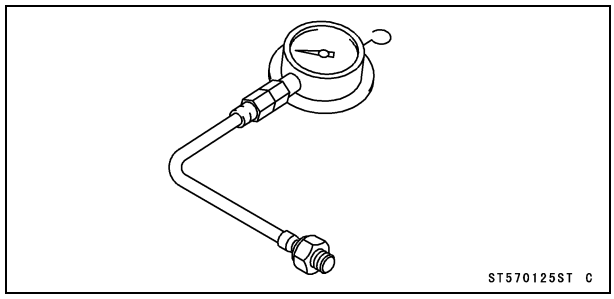

Measuring Adapter:
57001-1700

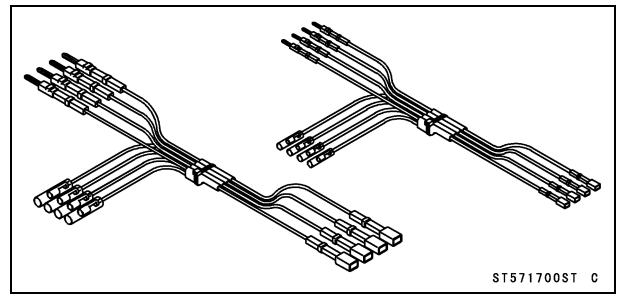

Needle Adapter Set:
57001-1457

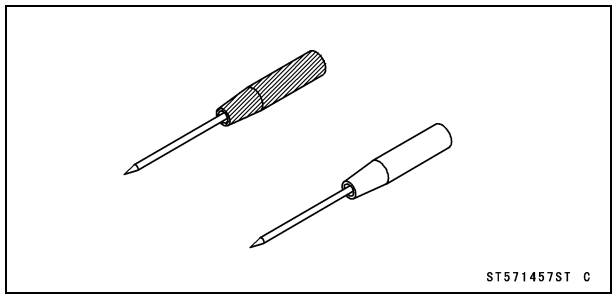

Liquid Gasket, TB1211:
56019-120

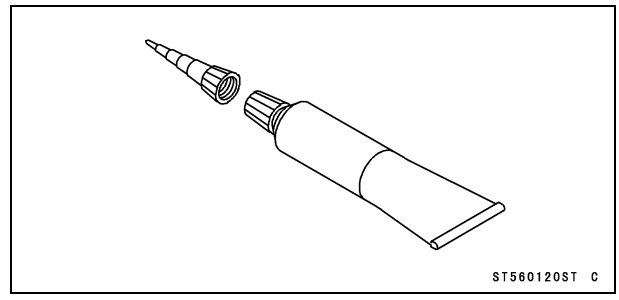

Fuel Pressure Gauge Adapter:
57001-1593

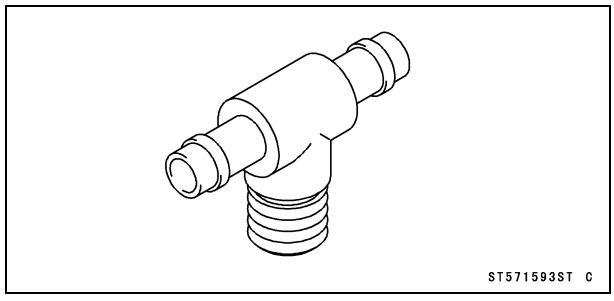

Liquid Gasket, TB1207B:
92104-2068

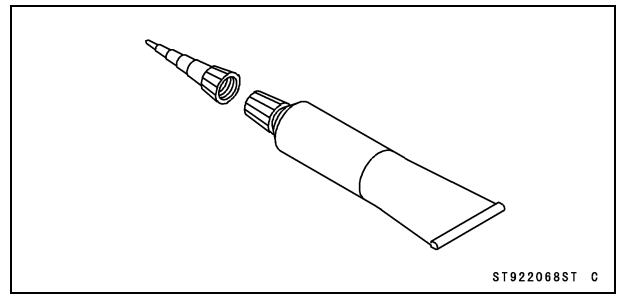

Fuel Hose:
57001-1607

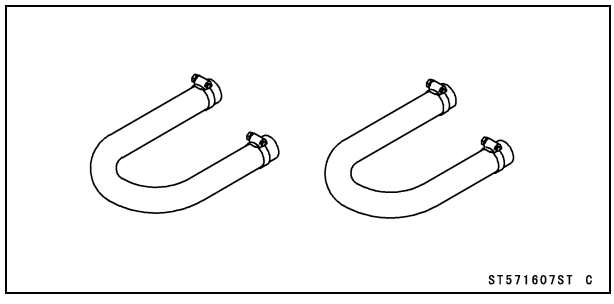

DFI Servicing Precautions

There are a number of important precautions that should be followed servicing the DFI system.

- This DFI system is designed to be used with a 12 V sealed battery as its power source. Do not use any other battery except for a 12 V sealed battery as a power source.
- Do not reverse the battery cable connections. This will damage the ECU.
- To prevent damage to the DFI parts, do not disconnect the battery cables or any other electrical connections when the ignition switch is on, or while the engine is running.
- Take care not to short the leads that are directly connected to the battery positive (+) terminal to the chassis ground.
- When charging, remove the battery from the motorcycle. This is to prevent ECU damage by excessive voltage.

- Whenever the DFI electrical connections are to be disconnected, first turn off the ignition switch, and disconnect the battery (–) terminal. Do not pull the lead, only the connector. Conversely, make sure that all the DFI electrical connections are firmly reconnected before starting the engine.
- Connect these connectors until they click [A].

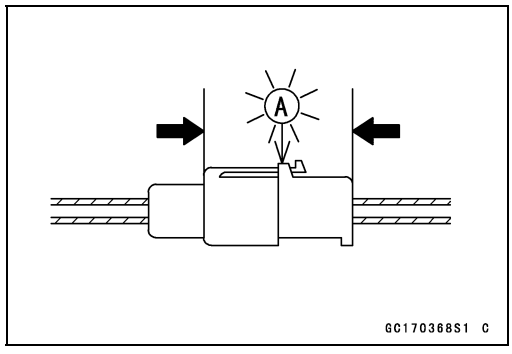

- Do not turn the ignition switch on while any of the DFI electrical connectors are disconnected. The ECU memorizes service codes.
- Do not spray water on the electrical parts, DFI parts, connectors, leads and wiring.
- If a transceiver is installed on the motorcycle, make sure that the operation of the DFI system is not influenced by electric wave radiated from the antenna. Check operation of the system with the engine at idle. Locate the antenna as far as possible away from the ECU.
- When any fuel hose is disconnected, do not turn on the ignition switch. Otherwise, the fuel pump will operate and fuel will spout from the fuel hose.
- Do not operate the fuel pump if the pump is completely dry. This is to prevent pump seizure.
- Before removing the fuel system parts, blow the outer surfaces of these parts clean with compressed air.
- When any fuel hose is disconnected, fuel may spout out by residual pressure in the fuel line. Cover the hose joint with a piece of clean cloth to prevent fuel spillage.
- When installing the fuel hoses, avoid sharp bending, kinking, flattening or twisting, and run the fuel hoses with a minimum of bending so that the fuel flow will not be obstructed.
- Run the hoses according to Cable, Wire, and Hose Routing section in the Appendix chapter.
- To prevent corrosion and deposits in the fuel system, do not add to fuel any fuel antifreeze chemicals.

DFI Servicing Precautions

○If the motorcycle is not properly handled, the high pressure inside the fuel line can cause fuel to leak or the hose to burst. Remove the fuel tank (see Fuel Tank Removal) and check the fuel hoses [A].

★Replace the fuel hose if any fraying, cracks or bulges are noticed.



○To maintain the correct fuel/air mixture (F/A), there must be no intake air leaks in the DFI system. Be sure to install the oil filler plug [A] after filling the engine oil.

Torque - Oil Filter Plug: 10 N·m (1.0 kgf·m, 89 in·lb)

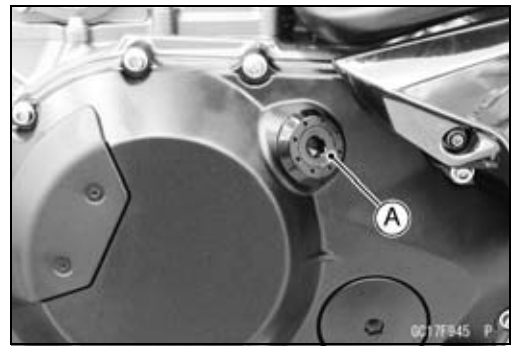

Troubleshooting the DFI System

Outline

When a problem occurs with DFI system, the yellow engine warning indicator light (LED) [A] stays on after starting the engine to alert the rider.

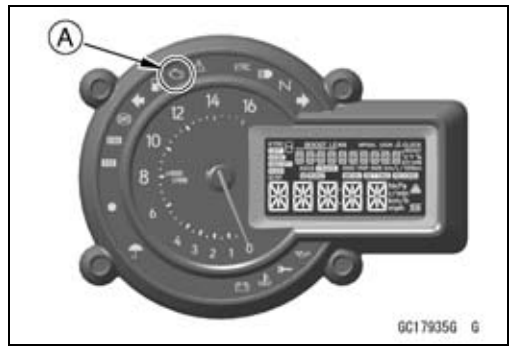

For models equipped with an immobilizer system, the red immobilizer warning indicator light (LED) [A] blinks, when a problem occurs in the system.

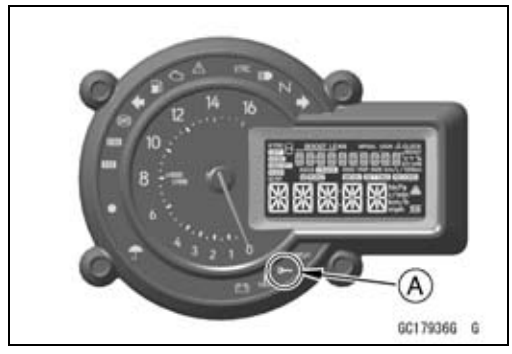

With the engine stopped and turned in the self-diagnosis mode, the service code [A] is displayed on the LCD by the number of two digits.

If the problem is with the following parts, the ECU can not recognize these problem. Therefore, the yellow engine warning indicator light (LED) does not go on, and service code is not displayed.

Fuel Pump
Stick Coil Secondary Wiring and Ground Wiring
ECU Main Relay

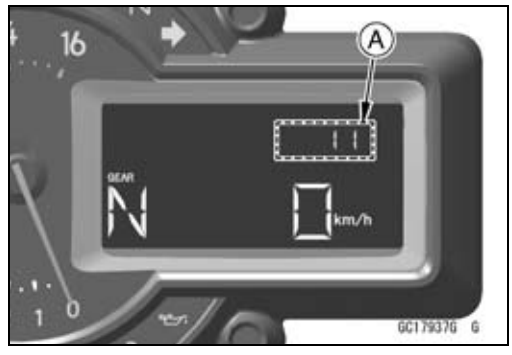

When the service code [A] is displayed, for first ask the rider about the conditions [B] of trouble, and then start to determine the cause [C] of problem.

As a pre-diagnosis inspection, check the ECU for ground and power supply, the fuel line for no fuel leaks, and for correct pressure. The pre-diagnosis items are not indicated by the yellow engine warning indicator light (LED).

Don't rely solely on the DFI self-diagnosis function, use common sense.

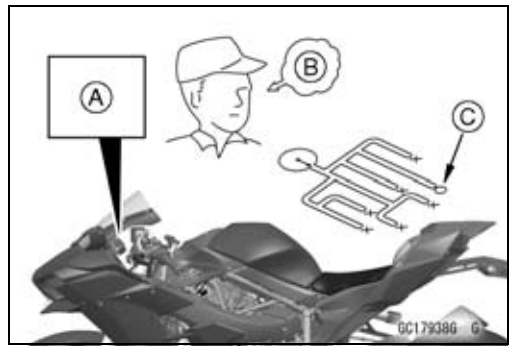

Troubleshooting the DFI System

Even when the DFI system is operating normally, the yellow engine warning indicator light (LED) goes on may be displayed under strong electrical interference. Additional measures are not required. Turn the ignition switch off to stop the indicator.

If the yellow engine warning indicator light (LED) of the motorcycle brought in for repair still goes on, check the service code.

When the repair has been done, the yellow engine warning indicator light (LED) goes off after the service code erasing procedure (see Service Code Erasing in the Self-diagnosis System chapter) is done.

When the motorcycle is down, the vehicle-down sensor operates and the ECU shuts off the fuel pump relay, fuel injectors and ignition system. The ignition switch is left on. If the starter button is pushed, the electric starter turns but the engine does not start. To start the engine again, raise the motorcycle, turn the ignition switch off, and then on.

Much of the DFI system troubleshooting work consists of confirming continuity of the wiring. The DFI parts are assembled and adjusted with precision, and it is impossible to disassemble or repair them.

- When checking the DFI parts, use a digital meter which can be read two decimal place voltage or resistance.

○The DFI part connectors [A] have seals [B], including the ECU. When measuring the input or output voltage with the connector joined, use the needle adapter set [C]. Insert the needle adapter inside the seal until the needle adapter reaches the terminal.

Special Tool - Needle Adapter Set: 57001-1457

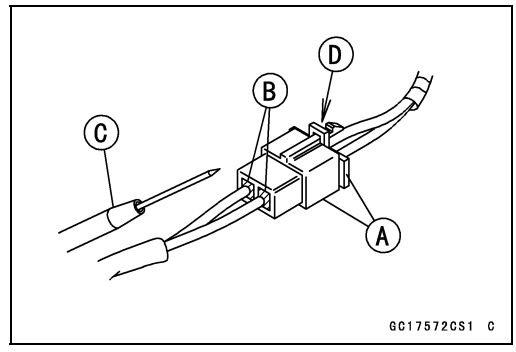

NOTICE
Insert the needle adapter straight along the terminal in the connector to prevent short-circuit between terminals.

- Make sure that measuring points are correct in the connector, noting the position of the lock [D] and the lead color before measurement. Do not reverse connections of a digital meter.
- Be careful not to short-circuit the leads of the DFI or electrical system parts by contact between adapters.
- Turn the ignition switch on and measure the voltage with the connector joined.

NOTICE
Incorrect, reverse connection or short circuit by needle adapters could damage the DFI or electrical system parts.

Troubleshooting the DFI System

○After measurement, remove the needle adapters and apply silicone sealant to the seals [A] of the connector [B] for waterproofing.

Sealant - Liquid Gasket, TB1211: 56019-120

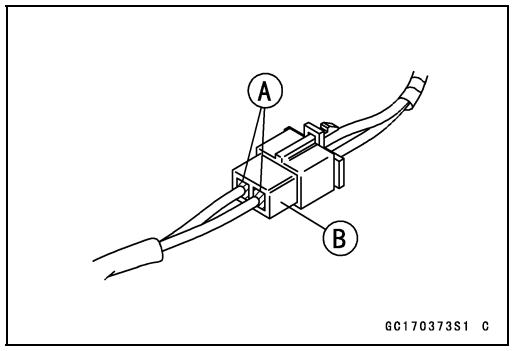

- Always check battery condition before replacing the DFI parts. A fully charged battery is a must for conducting accurate tests of the DFI system.
- Trouble may involve one or in some cases all items. Never replace a defective part without determining what CAUSED the problem. If the problem was caused by some other item or items, they too must be repaired or replaced, or the new replacement part will soon fail again.
- Measure coil winding resistance when the DFI part is cold (at room temperature).
- Make sure all connectors in the circuit are clean and tight, and examine leads for signs of burning, fraying, short, etc. Deteriorated leads and bad connections can cause reappearance of problems and unstable operation of the DFI system.

★If any wiring is deteriorated, replace the wiring.

- Pull each connector [A] apart and inspect it for corrosion, dirt, and damage.

★If the connector is corroded or dirty, clean it carefully. If it is damaged, replace it. Connect the connectors securely.

- Check the wiring for continuity.

○Use the wiring diagram to find the ends of the lead which is suspected of being a problem.

○Connect a tester between the ends of the leads.

★If the tester does not read about 0 Ω, the lead is defective. Replace the lead or the main harness or the subharness.

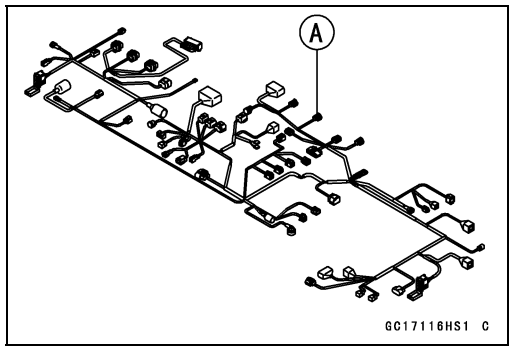

○If both ends of a harness [A] are far apart, ground [B] the one end [C], using a jumper lead [D] and check the continuity between the end [E] and the ground [F]. This enables to check a long harness for continuity. If the harness is open, repair or replace the harness.

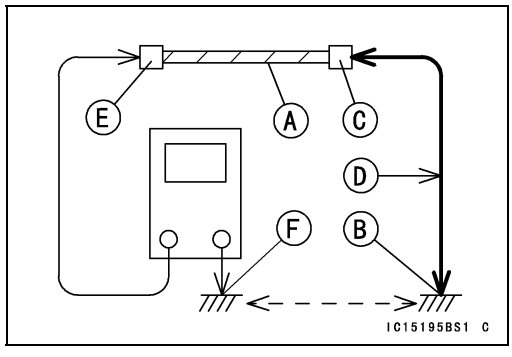

Troubleshooting the DFI System

○When checking a harness [A] for short circuit, open one end [B] and check the continuity between the other end [C] and ground [D]. If there is continuity, the harness has a short circuit to ground, and it must be repaired or replaced.

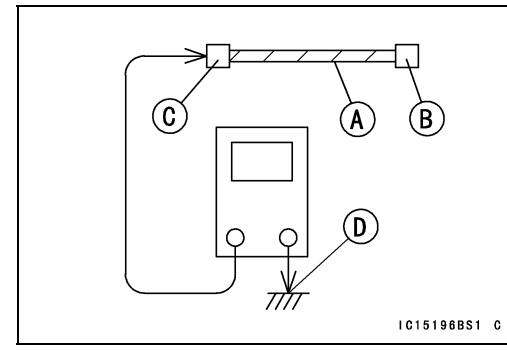

- Narrow down suspicious locations by repeating the continuity tests from the ECU connectors.

★If no abnormality is found in the wiring or connectors, the DFI parts are the next likely suspects. Check the part, starting with input and output voltages. However, there is no way to check the ECU itself.

★If an abnormality is found, replace the affected DFI part.

★If no abnormality is found in the wiring, connectors, and DFI parts, replace the ECU.

Troubleshooting the DFI System

DFI Diagnosis Flow Chart

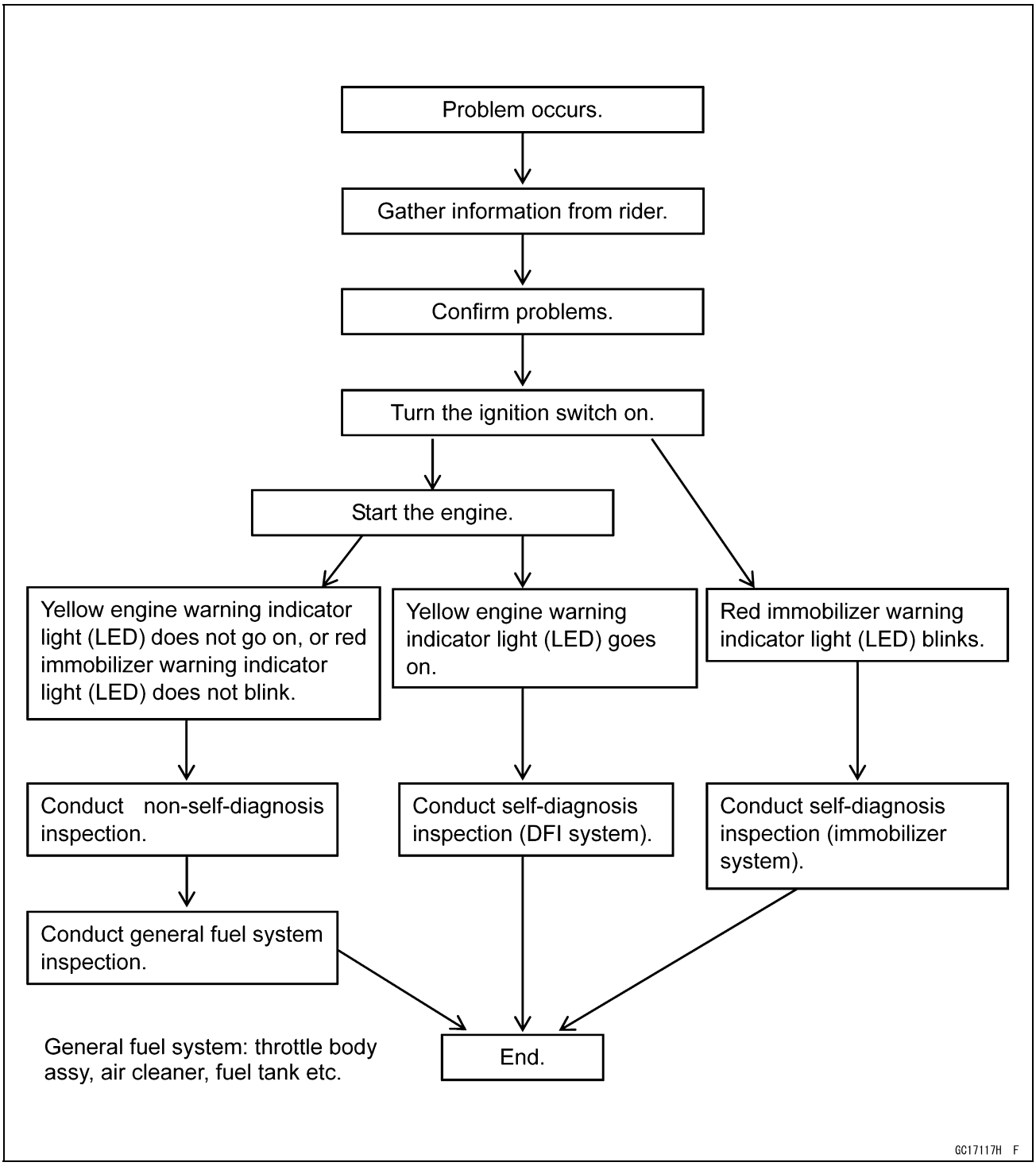

Inquiries to Rider

○Each rider reacts to problems in different ways, so it is important to confirm what kind of symptoms the rider has encountered.

○Try to find out exactly what problem occurred under exactly what conditions by asking the rider; knowing this information may help you reproduce the problem.

○The following sample diagnosis sheet will help prevent you from overlooking any areas, and will help you decide if it is a DFI system problem, or a general engine problem.

Troubleshooting the DFI System

Sample Diagnosis Sheet

Rider name:	**Registration No. (license plate No.):**	**Year of initial registration:**
Model:	**Engine No.:**	**Frame No.:**
Date problem occurred:		**Mileage:**
Environment when problem occurred.		
Weather	☐ fine, ☐ cloudy, ☐ rain, ☐ snow, ☐ always, ☐ other:	
Temperature	☐ hot, ☐ warm, ☐ cold, ☐ very cold, ☐ always, ☐ other:	
Problem frequency	☐ chronic, ☐ often, ☐once	
Road	☐ street, ☐ highway, ☐ mountain road (☐ uphill, ☐ downhill), ☐ bumpy, ☐ pebble	
Altitude	☐ normal, ☐ high (about 1 000 m or more)	
Motorcycle conditions when problem occurred.		
Yellow engine warning indicator light (LED)	☐ goes on immediately after turning the ignition switch on, and goes off after about 1 second (normal)	
	☐ goes on immediately after turning the ignition switch on, goes off after about 1 second, and goes on again after about 5 seconds (ECU communication error)	
	☐ goes on immediately after turning the ignition switch on, goes off after about 1 second, and goes on again and stays on (DFI problem)	
	☐ does not go on after turning the ignition switch on [indicator light (LED), meter unit fault]	
Red immobilizer warning indicator light (LED)	☐ Starts blinking about 1 second after ignition switch on (immobilizer system problem).	
	☐ Does not go on about 1 second after ignition switch on (ECU or meter unit fault).	
Starting difficulty	☐ starter motor not rotating.	
	☐ starter motor rotating but engine do not turn over.	
	☐ starter motor and engine do not turn over.	
	☐ no fuel flow (☐ no fuel in tank, ☐ no fuel pump sound).	
	☐ no spark.	
	☐ other:	
Engine stalls	☐ right after starting.	
	☐ when opening throttle grip.	
	☐ when closing throttle grip.	
	☐ when moving off.	
	☐ when stopping the motorcycle.	
	☐ when cruising.	
	☐ other:	

Troubleshooting the DFI System

Poor running at low speed	☐ very low idle speed, ☐ very high idle speed, ☐ rough idle speed.
	☐ battery voltage is low (charge the battery).
	☐ spark plug loose (tighten it).
	☐ spark plug dirty, broken, or gap maladjusted (remedy it).
	☐ backfiring.
	☐ afterfiring.
	☐ hesitation when acceleration.
	☐ engine oil viscosity too high.
	☐ brake dragging.
	☐ engine overheating.
	☐ clutch slipping.
	☐ other:
Poor running or no power at high speed	☐ spark plug loose (tighten it).
	☐ spark plug dirty, broken, or gap maladjusted (remedy it).
	☐ spark plug incorrect (replace it).
	☐ knocking (fuel poor quality or incorrect, → use high-octane gasoline).
	☐ brake dragging.
	☐ clutch slipping.
	☐ engine overheating.
	☐ engine oil level too high.
	☐ engine oil viscosity too high.
	☐ other:

DFI System Troubleshooting Guide

NOTE

○*This is not an exhaustive list, giving every possible cause for each problem listed. It is meant simply as a rough guide to assist the troubleshooting for some of the more common difficulties in DFI system.*

○*The ECU may be involved in the DFI electrical, ETV and ignition system troubles. If these parts and circuits are checked out good, be sure to check the ECU for ground and power supply. If the ground and power supply are checked good, replace the ECU.*

Engine Won't Turn Over

Symptoms or possible Causes	Actions (chapter)
Gear position sensor, starter lockout or side stand switch trouble	Inspect each switch or sensor (see chapter 16).
Immobilizer system trouble	Inspect (see chapter 17).
Vehicle-down sensor operated	Turn ignition switch off (see chapter 17).
Vehicle-down sensor trouble	Inspect (see chapter 17).
Crankshaft sensor trouble	Inspect (see chapter 16).
Stick coil shorted or not in good contact	Inspect or Reinstall (see chapter 16).
Stick coil trouble	Inspect (see chapter 16).
Spark plug dirty, broken or gap maladjusted	Inspect and replace (see chapter 2).
Spark plug incorrect	Replace it with the correct plug (see chapter 2).
ECU ground and power supply trouble	Inspect (see chapter 3).
ECU trouble	Inspect (see chapter 3).
No or little fuel in tank	Supply fuel (see Owner's Manual).
Fuel injector trouble	Inspect and replace (see chapter 17).
Fuel pump not operating	Inspect (see chapter 3).
Fuel pump relay trouble	Inspect and replace (see chapter 17).
Fuel filter clogged	Replace fuel filter (see chapter 2).
Fuel pressure regulator trouble	Inspect fuel pressure and replace fuel pump (see chapter 3).
Fuel line clogged	Inspect and repair (see chapter 3).

Poor Running at Low Speed

Symptoms or Possible Causes	Actions (chapter)
Spark weak:	
Stick coil shorted or not in good contact	Inspect or reinstall (see chapter 16).
Stick coil trouble	Inspect (see chapter 16).
Spark plug dirty, broken or gap maladjusted	Inspect and replace (see chapter 2).
Spark plug incorrect	Replace it with the correct plug (see chapter 2).
ECU trouble	Inspect (see chapter 3).
Fuel/air mixture incorrect:	
Little fuel in tank	Supply fuel (see Owner's Manual).
Air cleaner clogged, poorly sealed, or missing	Clean element or inspect sealing (see chapter 2).
Air intake chamber loose	Reinstall (see chapter 3).
Throttle body assy loose	Reinstall (see chapter 3).
Throttle body assy O-ring damage	Replace (see chapter 3).
Fuel injector O-ring damage	Replace (see chapter 3).
Fuel filter clogged	Replace fuel filter (see chapter 2).

DFI System Troubleshooting Guide

Symptoms or Possible Causes	Actions (chapter)
Fuel pressure regulator trouble	Inspect fuel pressure and replace fuel pump (see chapter 3).
Fuel line clogged	Inspect and repair (see chapter 3).
Intake air pressure sensor trouble	Inspect (see chapter 17).
Water temperature sensor trouble	Inspect (see chapter 17).
Air intake chamber pressure/temperature senor trouble	Inspect (see chapter 17).
Atmospheric pressure sensor trouble	Inspect (see chapter 17).
Accelerator position sensor trouble	Inspect (see chapter 17).
Throttle position sensor trouble	Inspect (see chapter 17).
ETV actuator trouble	Inspect (see chapter 17).
Unstable (rough) idling:	
Fuel pressure too low or too high	Inspect (see chapter 3).
Fuel injector trouble	Inspect (see chapter 17).
Accelerator position sensor trouble	Inspect (see chapter 17).
Throttle position sensor trouble	Inspect (see chapter 17).
ETV actuator trouble	Inspect (see chapter 17).
Intake air pressure sensor trouble	Inspect (see chapter 17).
Water temperature sensor trouble	Inspect (see chapter 17).
Air intake chamber pressure/temperature senor trouble	Inspect (see chapter 17).
Atmospheric pressure sensor trouble	Inspect (see chapter 17).
Engine stalls easily:	
Spark plug dirty, broken or gap maladjusted	Inspect and replace (see chapter 2).
Stick coil trouble	Inspect (see chapter 16).
Accelerator position sensor trouble	Inspect (see chapter 17).
Throttle position sensor trouble	Inspect (see chapter 17).
ETV actuator trouble	Inspect (see chapter 17).
Intake air pressure sensor trouble	Inspect (see chapter 17).
Water temperature sensor trouble	Inspect (see chapter 17).
Air intake chamber pressure/temperature senor trouble	Inspect (see chapter 17).
Atmospheric pressure sensor trouble	Inspect (see chapter 17).
Fuel pump trouble	Inspect (see chapter 3).
Fuel injector trouble	Inspect (see chapter 17).
Fuel pressure too low or too high	Inspect (see chapter 3).
Fuel pressure regulator trouble	Inspect fuel pressure and replace fuel pump (see chapter 3).
Fuel line clogged	Inspect and repair (see chapter 3).
Poor acceleration:	
Fuel pressure too low	Inspect (see chapter 3).
Water or foreign matter in fuel	Change fuel. Inspect and clean fuel system (see chapter 3).
Fuel filter clogged	Replace fuel filter (see chapter 2).
Fuel pump trouble	Inspect (see chapter 3).

DFI System Troubleshooting Guide

Symptoms or Possible Causes	Actions (chapter)
Fuel injector trouble	Inspect (see chapter 17).
Accelerator position sensor trouble	Inspect (see chapter 17).
Throttle position sensor trouble	Inspect (see chapter 17).
ETV actuator trouble	Inspect (see chapter 17).
Intake air pressure sensor trouble	Inspect (see chapter 17).
Water temperature sensor trouble	Inspect (see chapter 17).
Air intake chamber pressure/temperature senor trouble	Inspect (see chapter 17).
Atmospheric pressure sensor trouble	Inspect (see chapter 17).
Spark plug dirty, broken or gap maladjusted	Inspect and replace (see chapter 2).
Stick coil trouble	Inspect (see chapter 16).
Stumble:	
Fuel pressure too low	Inspect (see chapter 3).
Fuel injector trouble	Inspect (see chapter 17).
Accelerator position sensor trouble	Inspect (see chapter 17).
Throttle position sensor trouble	Inspect (see chapter 17).
ETV actuator trouble	Inspect (see chapter 17).
Intake air pressure sensor trouble	Inspect (see chapter 17).
Water temperature sensor trouble	Inspect (see chapter 17).
Air intake chamber pressure/temperature senor trouble	Inspect (see chapter 17).
Atmospheric pressure sensor trouble	Inspect (see chapter 17).
Surge:	
Unstable fuel pressure	Fuel pressure regulator trouble (Inspect and replace fuel pump) or kinked fuel line (Inspect and replace fuel pump) (see chapter 3).
Fuel injector trouble	Inspect (see chapter 17).
Water temperature sensor trouble	Inspect (see chapter 17).
Backfiring when deceleration:	
Spark plug dirty, broken or gap maladjusted	Inspect and replace (see chapter 2).
Fuel pressure too low	Inspect (see chapter 3).
Fuel pump trouble	Inspect (see chapter 3).
Accelerator position sensor trouble	Inspect (see chapter 17).
Throttle position sensor trouble	Inspect (see chapter 17).
ETV actuator trouble	Inspect (see chapter 17).
Intake air pressure sensor trouble	Inspect (see chapter 17).
Water temperature sensor trouble	Inspect (see chapter 17).
Air intake chamber pressure/temperature senor trouble	Inspect (see chapter 17).
Atmospheric pressure sensor trouble	Inspect (see chapter 17).
Air switching valve trouble	Inspect and replace (see chapter 16).
Air suction valve trouble	Inspect and replace (see chapter 5).
After fire:	
Spark plug burned or gap maladjusted	Replace (see chapter 2).
Fuel injector trouble	Inspect (see chapter 17).

DFI System Troubleshooting Guide

Symptoms or Possible Causes	Actions (chapter)
Intake air pressure sensor trouble	Inspect (see chapter 17).
Water temperature sensor trouble	Inspect (see chapter 17).
Air intake chamber pressure/temperature senor trouble	Inspect (see chapter 17).
Atmospheric pressure sensor trouble	Inspect (see chapter 17).
Other:	
Intermittent any DFI fault and its recovery	Check that DFI connectors are clean and tight, and examine leads for signs of burning or fraying (see chapter 17).

Poor Running or No Power at High Speed:

Symptoms or Possible Causes	Actions (chapter)
Firing incorrect:	
Stick coil shorted or not in good contact	Inspect or Reinstall (see chapter 16).
Stick coil trouble	Inspect (see chapter 16).
Spark plug dirty, broken or gap maladjusted	Inspect and replace (see chapter 2).
Spark plug incorrect	Replace it with the correct plug (see chapter 2).
ECU trouble	Inspect (see chapter 3).
Fuel/air mixture incorrect:	
Air cleaner clogged, poorly sealed, or missing	Clean element or inspect sealing (see chapter 2).
Air intake chamber loose	Reinstall (see chapter 3).
Throttle body assy loose	Reinstall (see chapter 3).
Throttle body assy O-ring damage	Replace (see chapter 3).
Water or foreign matter in fuel	Change fuel. Inspect and clean fuel system (see chapter 3).
Fuel injector O-ring damage	Replace (see chapter 3).
Fuel injector clogged	Inspect and repair (see chapter 3).
Fuel line clogged	Inspect and repair (see chapter 3).
Fuel pump operates intermittently and often DFI fuse blows.	Fuel pump bearings may wear. Replace the fuel pump (see chapter 3).
Fuel pump trouble	Inspect (see chapter 3).
Intake air pressure sensor trouble	Inspect (see chapter 17).
Cracked or obstructed intake air pressure sensor vacuum hose	Inspect and repair or replace (see chapter 17).
Water temperature sensor trouble	Inspect (see chapter 17).
Air intake chamber pressure/temperature senor trouble	Inspect (see chapter 17).
Atmospheric pressure sensor trouble	Inspect (see chapter 17).
Accelerator position sensor trouble	Inspect (see chapter 17).
Throttle position sensor trouble	Inspect (see chapter 17).
ETV actuator trouble	Inspect (see chapter 17).
Knocking:	
Fuel poor quality or incorrect	Fuel change (Use the gasoline recommended in the chapter 1 General Specifications).
Spark plug incorrect	Replace it with the correct plug (see chapter 2).

DFI System Troubleshooting Guide

Symptoms or Possible Causes	Actions (chapter)
Stick coil trouble	Inspect (see chapter 16).
ECU trouble	Inspect (see chapter 3).
Engine vacuum not synchronizing	Inspect and adjust (see chapter 2).
Intake air pressure sensor trouble	Inspect (see chapter 17).
Water temperature sensor trouble	Inspect (see chapter 17).
Air intake chamber pressure/temperature senor trouble	Inspect (see chapter 17).
Atmospheric pressure sensor trouble	Inspect (see chapter 17).
Knock sensor trouble	Inspect (see chapter 17).
Miscellaneous:	
Throttle valves will not fully open	Inspect throttle cables and ETV system (see chapter 17).
Engine overheating - Water temperature sensor, crankshaft sensor or speed sensor trouble	(see Overheating of Troubleshooting Guide in chapter 18)
Air switching valve trouble	Inspect and replace (see chapter 16).
Air suction valve trouble	Inspect and replace (see chapter 5).
Exhaust Smokes Excessively:	
(Black smokes)	
Air cleaner element clogged	Clean element (see chapter 2).
Fuel pressure too high	Inspect (see chapter 3).
Fuel injector trouble	Inspect (see chapter 17).
Water temperature sensor trouble	Inspect (see chapter 17).
Air intake chamber pressure/temperature sensor trouble	Inspect (see chapter 3).
(Brown smoke)	
Air intake duct loose	Reinstall (see chapter 15).
Fuel pressure too low	Inspect (see chapter 3).
Water temperature sensor trouble	Inspect (see chapter 3).
Air intake chamber pressure/temperature sensor trouble	Inspect (see chapter 3).

Warning Indicator Light (LED)

Yellow Engine Warning Indicator Light (LED) Inspection

Yellow Engine Warning Indicator Light (LED) [A]

○In this model, the above mentioned warning indicator light (LED) goes on or blink by the data sent from the ECU.

● Refer to the Meter Unit Inspection in the Electrical System chapter.

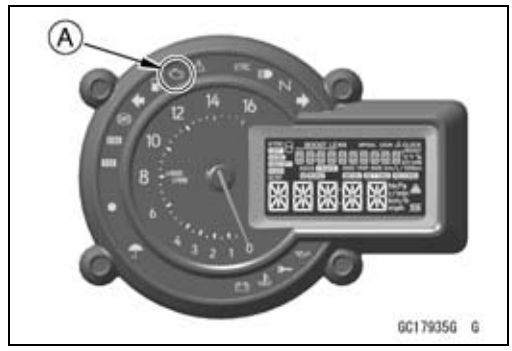

Warning Indicator (LED) Circuit

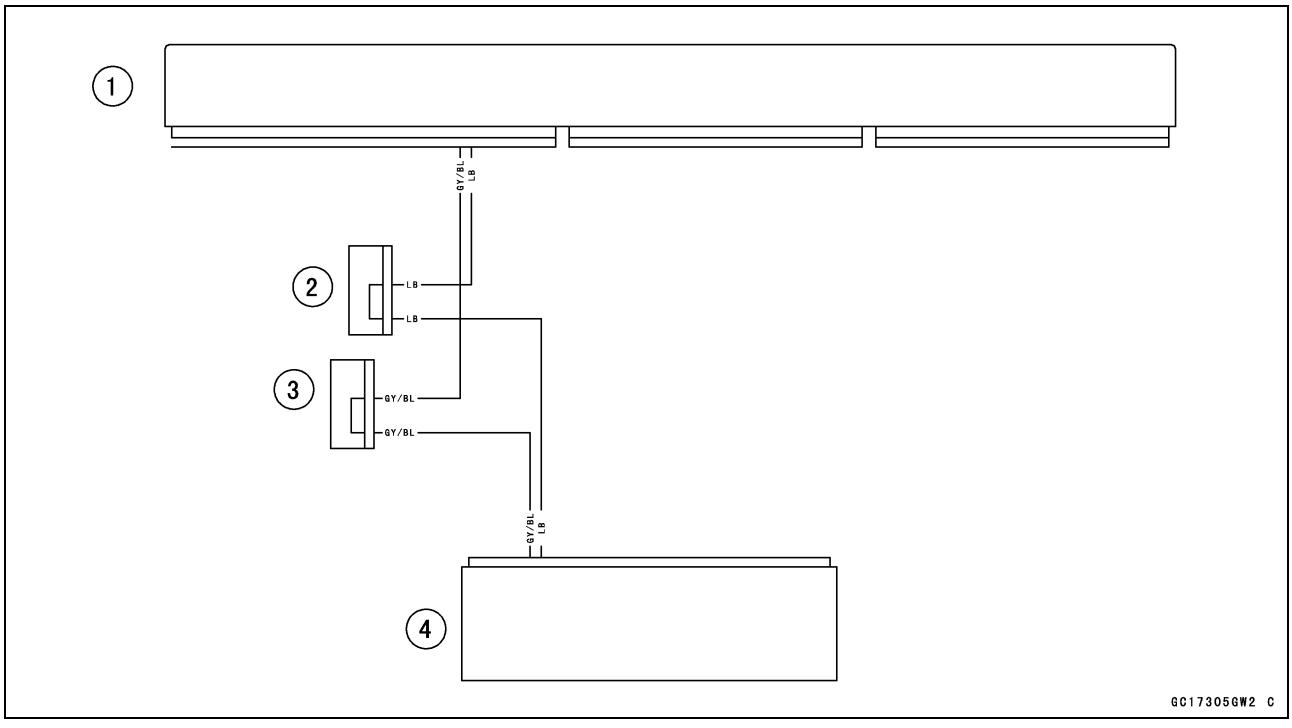

1. ECU
2. Joint Connector H
3. Joint Connector I
4. Meter Unit

ECU

ECU Identification

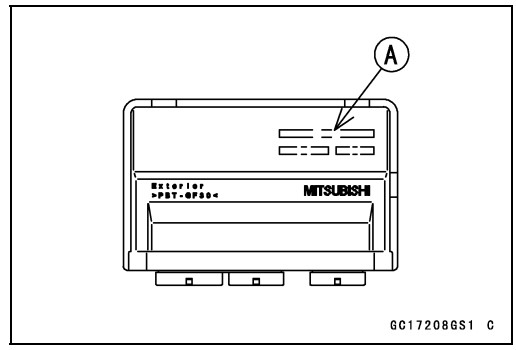

○Most countries have their own regulations, so each ECU has different characteristic. So, do not confuse ECU with each other and use only the ECU for your model. Otherwise, the motorcycle cannot clear the regulation.

ECU Identification

Part Number [A]	Specification
21175-1232	US, without Immobilizer
	CA, without Immobilizer
21175-1233	CAL, without Immobilizer
21175-1234	AU, with Immobilizer
	WVTA (FULL), with Immobilizer
21175-1235	SEA-B3, with Immobilizer
	ID, with Immobilizer
	PH, with Immobilizer
21175-1236	SEA-B1, with Immobilizer
21175-1285	BR, with Immobilizer
21175-1296	MY, with Immobilizer
21175-1297	TH, with Immobilizer

ECU Removal

NOTICE
Never drop the ECU especially on a hard surface. Such a shock to the ECU can damage it.

NOTE

○*When replace the ECU with a new one or reused one from another motorcycle, you must register the accelerator position and throttle position data of the throttle body to the ECU.*

○*For immobilizer equipped models, register the ignition key correctly before doing the following procedure (see Key Registration in the Electrical System chapter).*

1. In the new ECU, wait the 10 seconds at the idle speed and the coolant temperature 40°C (104°F) or more to register the sensor position to the ECU.
2. In the reused ECU, erase the stored service code memory using Kawasaki Diagnostic System (KDS Ver.3), and wait the 10 seconds at the idle speed and the coolant temperature 40°C (104°F) or more to register the sensor position to the ECU.

ECU

- Remove:
  Upper Fairing (see Upper Fairing Removal in the Frame chapter)
  Bolts [A]
  Clamps [B]
  Bracket [C]

NOTE

○*For EUR models, use a small chisel or other suitable tool to remove the bolts.*

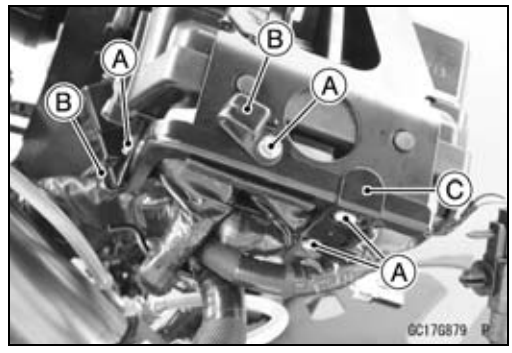

- Remove:
  Bolts [A]
  Bracket [B]

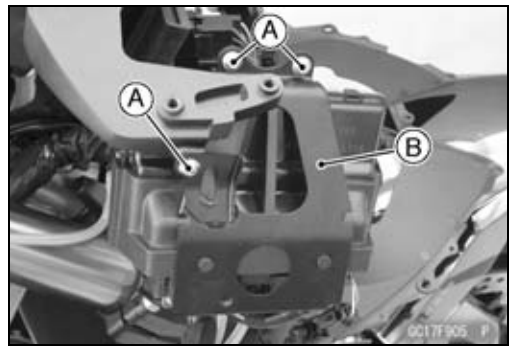

- Disconnect the ECU connectors [A].
- Remove:
  ECU (with Rubber Protector) [B]

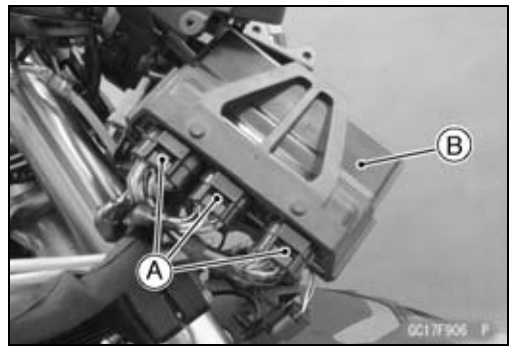

ECU Installation

- Installation is the reverse of removal.
- Check that the pad [A] and trim [B] are in place on the bracket.

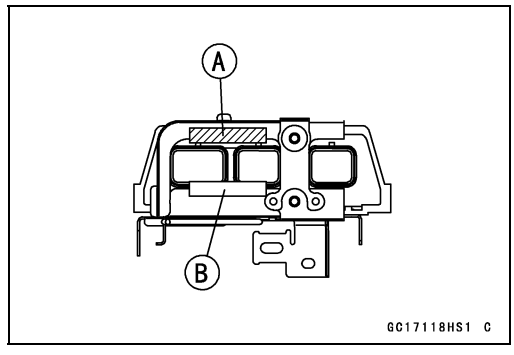

ECU Power Supply Inspection

- Visually inspect the ECU connectors.

★If the connector is clogged with mud or dust, blow it off with compressed air.

- Remove the ECU (see ECU Removal).
- Visually inspect the terminals [A] of the ECU and main harness connectors.

★If the terminals of the main harness connectors are damaged, replace the main harness.

★If the terminals of the ECU connectors are damaged, replace the ECU.

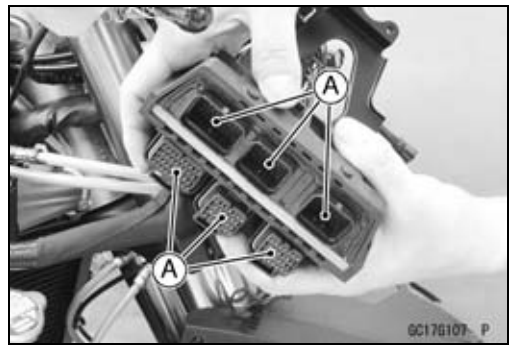

ECU

- Turn the ignition switch off.
- Disconnect the ECU connector [A] (see ECU Removal).
- Set a tester [B] and check the following wiring for continuity.

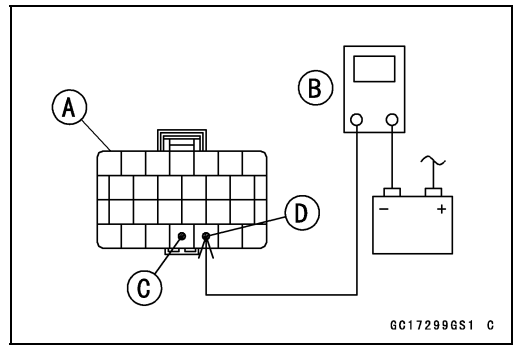

ECU Grounding Inspection
Connections:
(I) ECU Terminal 22 [C] or 23 [D] ←→ Battery (–) Terminal
(II) Engine Ground ←→ Battery (–) Terminal
Criteria:
Both: 0 Ω

★If no continuity, check the connectors, the engine ground lead, or main harness, and repair or replace them if necessary.

★If the wiring is good, check the power source voltage of the ECU.

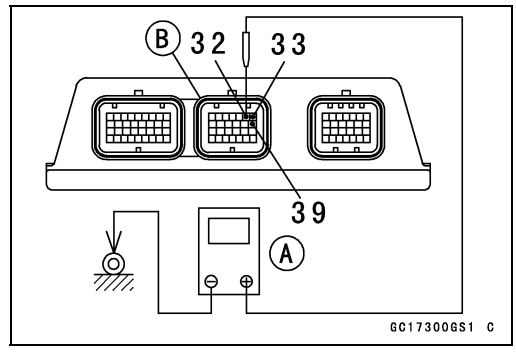

NOTE

○*Be sure the battery is fully charged.*

- Connect the ECU connectors.
- Connect a digital meter [A] to the connector (black) [B] with the needle adapter set.

Special Tool - Needle Adapter Set: 57001-1457

ECU Power Supply Inspection
Connections:
(I) Digital Meter (+) → BR/W lead (terminal 32)
Digital Meter (–) → Battery (–) Terminal
(II) Digital Meter (+) → W/BK lead (terminal 33, 39)
Digital Meter (–) → Battery (–) Terminal
Ignition Switch off:
BR/W lead (terminal 32): 0 V
W/BK lead (terminal 33, 39): Battery Voltage
Ignition Switch on:
Both: Battery Voltage

★If the reading is out of the specification, check the following.
Main Fuse 30 A (see Fuse Inspection in the Electrical System chapter)
ECU Fuse 15 A (see Fuse Inspection Electrical System chapter)
ECU Main Relay (see Relay Circuit Inspection in the Electrical System chapter)
Power Source Wiring (see ECU Power Source Circuit)

★If the fuse, wiring and relay are good, replace the ECU (see ECU Removal/Installation).

ECU

ECU Power Source Circuit

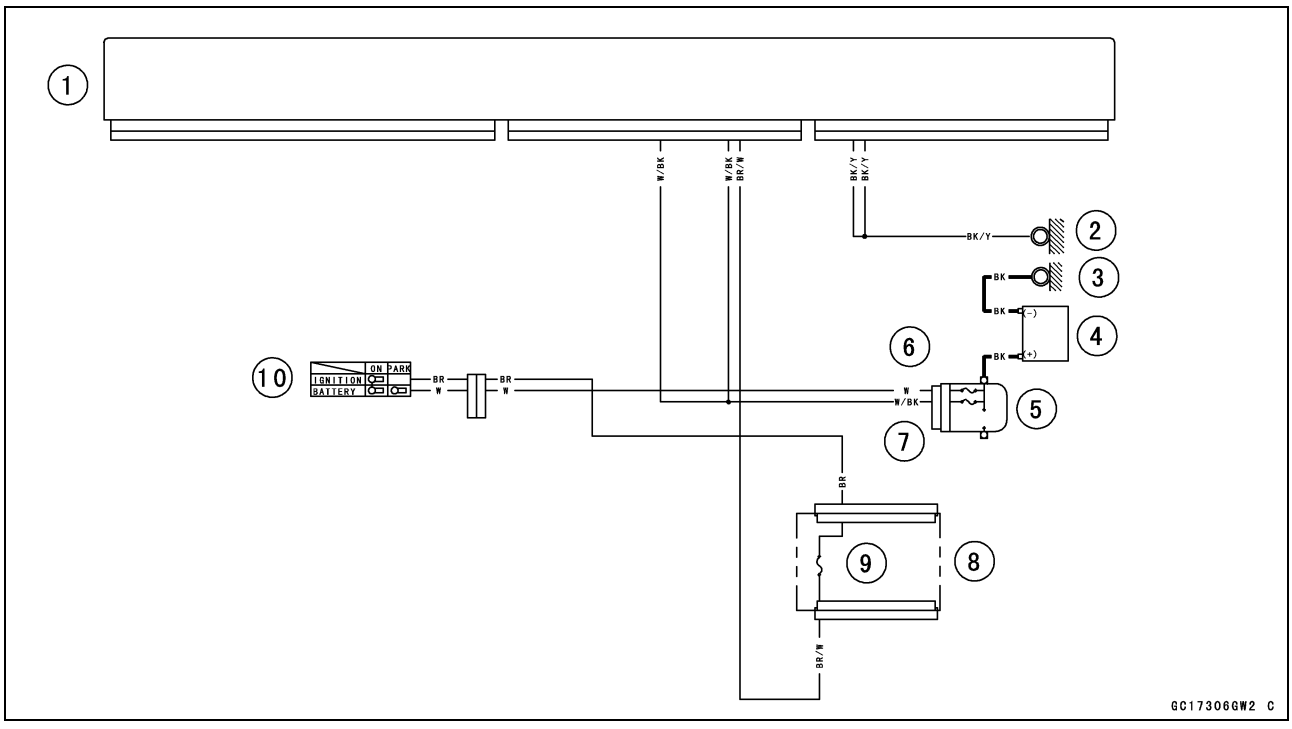

1. ECU
2. Frame Ground (3)
3. Engine Ground
4. Battery 12 V 8.6 Ah
5. Starter Relay
6. Main Fuse 30 A
7. ECU Fuse 15 A
8. Fuse Box (1)
9. Ignition Fuse 15 A
10. Ignition Switch

DFI Power Source

ECU Fuse Removal

- Refer to the 30 A Main/15 A ECU Fuse Removal in the Electrical System chapter.

ECU Fuse Installation

★If a fuse fails during operation, inspect the DFI system to determine the cause, and then replace it with a new fuse of proper amperage.

- Refer to the Fuse Installation in the Electrical System chapter.

ECU Fuse Inspection

- Refer to the Fuse Inspection in the Electrical System chapter.

ECU Main Relay Removal/Installation

○The ECU main relay is built in the relay box [A].

- Refer to the Relay Box Removal in the Electrical System chapter.

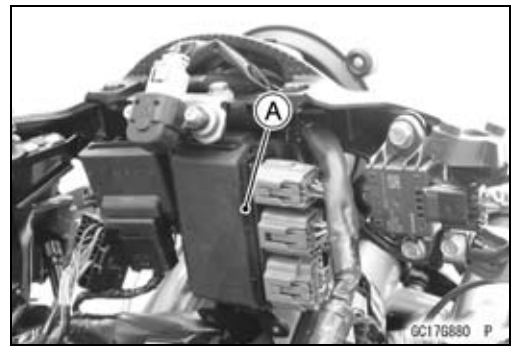

ECU Main Relay Inspection

- Refer to the Relay Circuit Inspection in the Electrical System chapter.

Fuel Line

Fuel Pressure Inspection

NOTE

○*Be sure the battery is fully charged.*

● Remove:
Air Intake Chamber (see Air Intake Chamber Removal)
Primary Fuel Hose (see Fuel Hose Replacement in the Periodic Maintenance chapter)

○Be sure to place a piece of cloth around the delivery pipe of the throttle body assy.

⚠ WARNING

Fuel is flammable and explosive under certain conditions and can cause severe burns. Be prepared for fuel spillage; any spilled fuel must be completely wiped up immediately. When the fuel hose is disconnected, fuel spills out from the hose and the pipe because of residual pressure. Cover the hose connection with a piece of clean cloth to prevent fuel spillage.

● Install the fuel pressure gauge adapter [A] and fuel hoses (Special Tool: 57001-1607) [B] between the fuel outlet pipe and delivery pipe.
● Secure the fuel hoses with the clamps.
● Connect the pressure gauge [C] to the fuel pressure gauge adapter.



Special Tools - Oil Pressure Gauge, 5 kgf/cm²: 57001-125
Fuel Pressure Gauge Adapter: 57001-1593
Fuel Hose: 57001-1607

⚠ WARNING

Fuel is extremely flammable and can be explosive under certain conditions resulting in serious injury or death. Do not try to start the engine with the fuel hoses disconnected.

● Install the following parts temporarily.
Air Intake Chamber (see Air Intake Chamber Installation)
Fuel Tank (see Fuel Tank Installation)
● Turn the engine start/stop switch run position.
● Turn the ignition switch on.

○The fuel pump should operate for 3 seconds, and then should stop.

NOTE

○*After turning on the engine start/stop switch and ignition switch, inspect the fuel leakage from the connected portion of the special tools.*

NOTICE

Do not drive the fuel pump 3 seconds or more without the fuel in the fuel tank. If the fuel pump is driven without the fuel, it may be damaged.

Fuel Line

- Start the engine, and let it idle.
- Measure the fuel pressure with the engine idling.

Fuel Pressure (with Engine Idling)
Standard: 380 kPa (3.9 kgf/cm², 55 psi)

NOTE

○*The gauge needle will fluctuate. Read the pressure at the average of the maximum and minimum indications.*

- Turn the ignition switch off.

★If the fuel pressure is much higher than specified, replace the fuel pump because the fuel pressure regulator in the fuel pump have been clogged or stuck.

★If the fuel pressure is much lower than specified, check the following.
Fuel Line Leakage (see Fuel Injector Fuel Line Inspection in the Self-Diagnosis System chapter)
Amount of Fuel Flow (see Fuel Flow Rate Inspection)

- After above checks, measure the fuel pressure again.
- Remove the fuel pressure gauge, hoses and adapter.
- Install:
  Primary Fuel Hose (see Fuel Hose Replacement in the Periodic Maintenance chapter)
- Install the removed parts (see appropriate chapters).
- Start the engine and check for fuel leakage.

Fuel Flow Rate Inspection

⚠ WARNING

Fuel is flammable and explosive under certain conditions and can cause severe burns. Be prepared for fuel spillage; any spilled fuel must be completely wiped up immediately. When the fuel hose is disconnected, fuel spills out from the hose and the pipe because of residual pressure. Cover the hose connection with a piece of clean cloth to prevent fuel spillage.

NOTE

○*Be sure the battery is fully charged.*

- Turn the ignition switch off.
- Wait until the engine cools down.
- Prepare a fuel hose (Special Tool: 57001-1607) and a measuring cylinder.

Special Tool - Fuel Hose: 57001-1607

Fuel Line

- Open the fuel tank cap [A] to lower the pressure in the tank.
- Remove the primary fuel hose from the fuel pump (see Fuel Tank Removal).

○Be sure to place a piece of cloth around the fuel outlet pipe of the fuel pump.

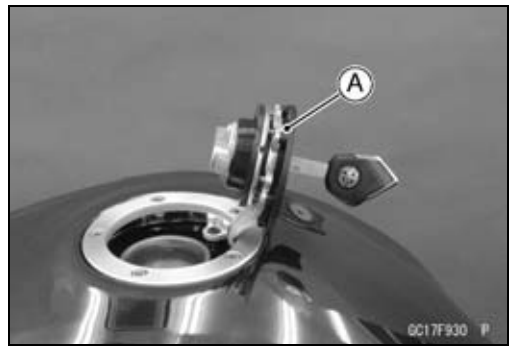

- Connect the prepared fuel hose [A] to the fuel outlet pipe.
- Secure the fuel hose with a clamp.
- Insert the fuel hose into the measuring cylinder [B].



⚠ WARNING

Wipe off spilled out fuel immediately.
Be sure to hold the measuring cylinder vertical.

- Close the fuel tank cap.
- Turn the engine start/stop switch to run position.
- Turn the ignition switch on.

○The fuel pump should operate for 3 seconds, and then should stop.

NOTICE

Do not drive the fuel pump 3 seconds or more without the fuel in the fuel tank. If the fuel pump is driven without the fuel, it may be damaged.

- Measure the discharge for 3 seconds.

○Repeat this operation several times.

Amount of Fuel Flow
Standard: 83 mL (2.8 US oz.) or more for 3 seconds

- Turn the ignition switch off.

★If the fuel flow is much less than the specified, replace the fuel pump (see Fuel Pump Removal/Installation).

- Install the fuel tank (see Fuel Tank Installation).
- Start the engine and check for fuel leakage.

Fuel Pump

Fuel Pump Removal

⚠ WARNING

Gasoline is extremely flammable and can be explosive under certain conditions, creating the potential for serious burns. Make sure the area is well ventilated and free from any source of flame or sparks; this includes any appliance with a pilot light. Do not smoke. Turn the ignition switch off. Disconnect the battery (–) terminal. To avoid fuel spills, draw it from the tank when the engine is cold. Be prepared for fuel spillage; any spilled fuel must be completely wiped up immediately.

NOTICE

Never drop the fuel pump especially on a hard surface. Such a shock to the pump can damage it.

- Draw the fuel out from the fuel tank with a commercially available electric pump.
- Remove the fuel tank (see Fuel Tank Removal).

○Be careful of fuel spillage from the fuel tank since fuel still remains in the fuel tank and fuel pump. Plug the fuel pipe of the fuel tank.

- Turn the fuel tank upside down.
- Remove the fuel pump bolts [A], and take out the fuel pump [B].

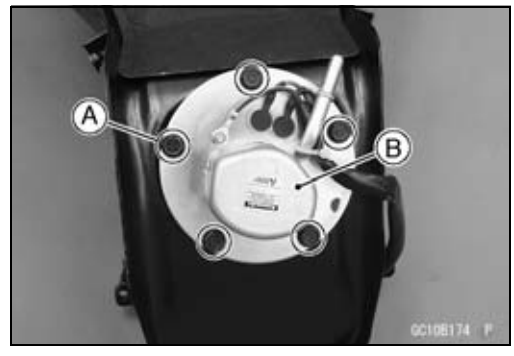

NOTICE

Do not pull the leads of the fuel pump. If they are pulled, the lead terminals may be damaged.

- Discard the fuel pump gasket [A].



Fuel Pump

Fuel Pump Installation

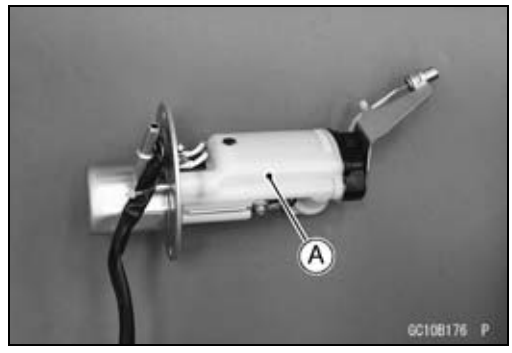

⚠ WARNING

Gasoline is extremely flammable and can be explosive under certain conditions, creating the potential for serious burns. Make sure the area is well ventilated and free from any source of flame or sparks; this includes any appliance with a pilot light. Do not smoke. Turn the ignition switch off. Disconnect the battery (–) terminal. To avoid fuel spills, draw it from the tank when the engine is cold. Be prepared for fuel spillage; any spilled fuel must be completely wiped up immediately.

- Remove dirt or dust from the fuel pump [A] by lightly applying compressed air.
- Replace the fuel pump gasket with a new one.

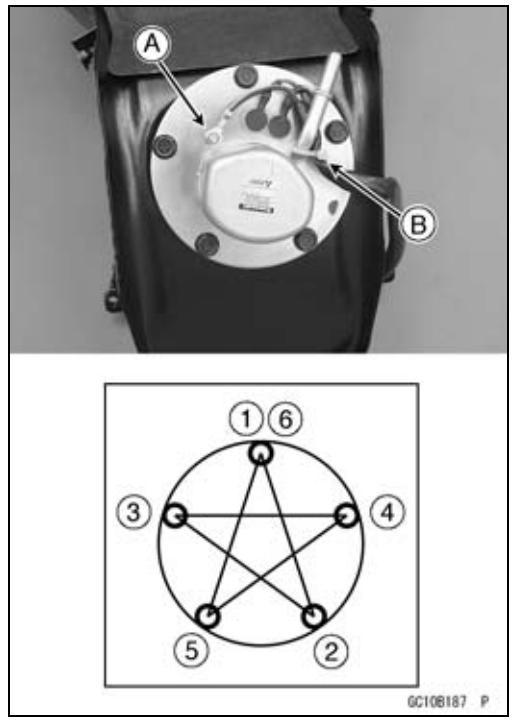

- Check that the fuel pump terminal [A] and band [B] are in place.
- Apply a non-permanent locking agent to the threads of the fuel pump bolts.
- Tighten the fuel pump bolts following the specified tightening sequence [1 ~ 6] temporarily.
- Tighten the fuel pump bolts same tightening sequence to specified torque.

  Torque - Fuel Pump Bolts: 10 N·m (1.0 kgf·m, 89 in·lb)

- Tighten the pump bolts again to check the tightness.

Fuel Pump Operation Inspection

NOTE

○*Be sure the battery is fully charged.*

- Turn the engine start/stop switch to run position.
- Turn the ignition switch on and make sure that the fuel pump operates (make light sounds) for 3 seconds, and then stops.
- Turn the ignition switch off.

★If the pump does not operate as described above, check the operating voltage (see Fuel Pump Operating Voltage Inspection).

Fuel Pump

Fuel Pump Operating Voltage Inspection

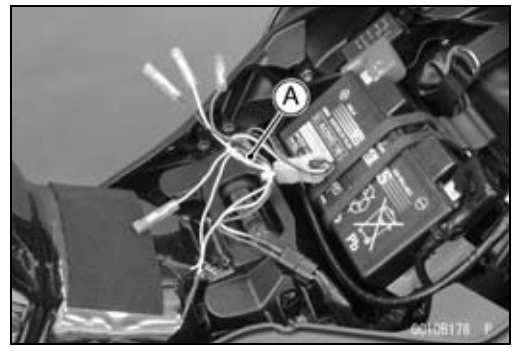

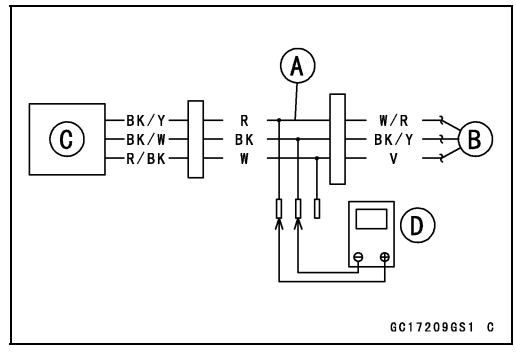

NOTE

○*Be sure the battery is fully charged.*

- Turn the ignition switch off.
- Remove the seat (see Seat Removal in the Frame chapter).
- Disconnect the fuel pump lead connector and connect the measuring adapter [A] between these connectors as shown.
  Main Harness [B]
  Fuel Pump [C]

  Special Tool - Measuring Adapter: 57001-1700
- Connect a digital meter [D] to the measuring adapter leads.

  Fuel Pump Operating Voltage
  Connections to Adapter:
  Digital Meter (+) → R (pump BK/Y) lead
  Digital Meter (–) → BK (pump BK/W) lead
- Measure the operating voltage with engine stopped and with the connector joined.
- Turn the engine start/stop switch run position.
- Turn the ignition switch on.

  Operating Voltage
  Standard: Battery Voltage for 3 seconds, and then 0 V
- Turn the ignition switch off.

★If the reading stays on battery voltage and never shows 0 V, check the fuel pump relay (see Relay Circuit Inspection in the Electrical System chapter).

★If the fuel pump relay is normal, check the ECU for its ground and power supply (see ECU Power Supply Inspection).

★If the ground and power supply are good, replace the ECU (see ECU Removal/Installation).

★If there is still no battery voltage, check the fuel pump relay (see Relay Circuit Inspection in the Electrical System chapter).

★If the fuel pump relay is normal, check the wiring for continuity (see Fuel Pump Circuit).

★If the wiring is good, check the ECU for its ground and power supply (see ECU Power Supply Inspection).

★If the ground and power supply are good, replace the ECU (see ECU Removal/Installation).

★If the reading is in specification, but the pump does not operate, replace the fuel pump (see Fuel Pump Removal/Installation).

Fuel Pump

Pressure Regulator Removal

○The pressure regulator [A] is built into the fuel pump and can not be removed.

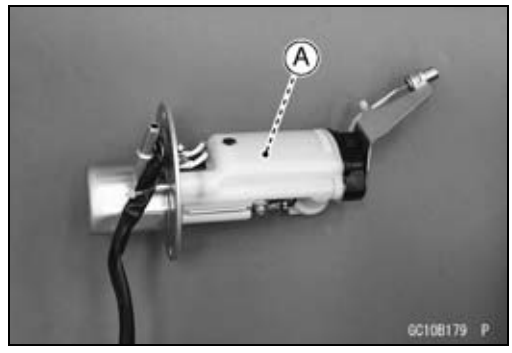

Fuel Pump Relay Removal/Installation

○The fuel pump relay is built in the relay box [A].

● Refer to the Relay Box Removal in the Electrical System chapter.

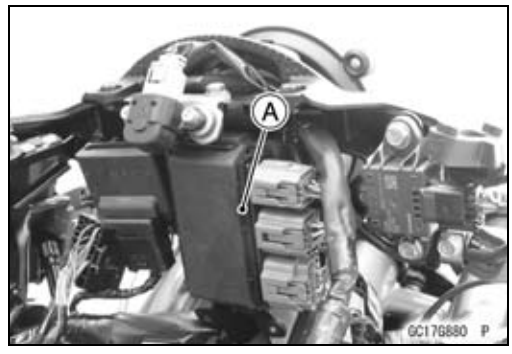

Fuel Pump Relay Inspection

● Refer to the Relay Circuit Inspection in the Electrical System chapter.

Fuel Pump Circuit

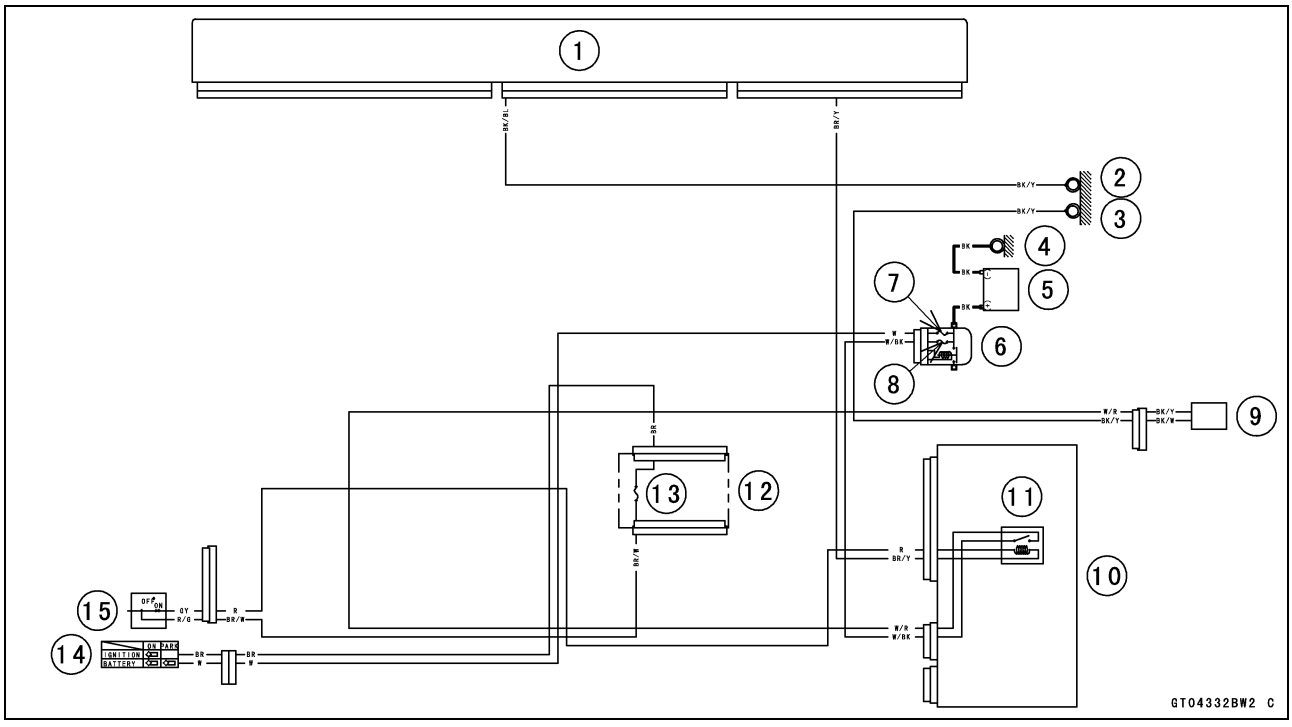

1. ECU
2. Frame Ground (4)
3. Frame Ground (3)
4. Engine Ground
5. Battery 12 V 8.6 Ah
6. Starter Relay
7. Main Fuse 30 A
8. ECU Fuse 15 A
9. Fuel Pump
10. Relay Box
11. Fuel Pump Relay
12. Fuse Box (1)
13. Ignition Fuse 15 A
14. Ignition Switch
15. Engine Start/Stop Switch

Fuel Injectors

Primary Fuel Injector Removal/Installation
- Refer to the Throttle Body Assy Disassembly/Assembly.

Secondary Fuel Injector Removal/Installation
- Refer to the Nozzle Assy Disassembly/Assembly.

Primary Fuel Injector Audible Inspection
- Refer to the Primary Fuel Injector Audible Inspection in the Self-Diagnosis System chapter.

Fuel Injector Resistance Inspection
- Refer to the Fuel Injector Resistance Inspection in the Self-Diagnosis System chapter.

Fuel Injector Power Source Voltage Inspection
- Refer to the Fuel Injector Power Source Voltage Inspection in the Self-Diagnosis System chapter.

Fuel Injector Output Voltage Inspection
- Refer to the Fuel Injector Output Voltage Inspection in the Self-Diagnosis System chapter.

Fuel Injector Fuel Line Inspection
- Refer to the Fuel Injector Fuel Line Inspection in the Self -Diagnosis System chapter.

Throttle Grip and Cables

Free Play Inspection

- Refer to the Throttle Control System Inspection in the Periodic Maintenance chapter.

Free Play Adjustment

- Refer to the Throttle Control System Inspection in the Periodic Maintenance chapter.

Cable Installation

- Install the throttle cables in accordance with the Cable, Wire, and Hose Routing section in the Appendix chapter.
- Install the lower ends of the throttle cables in the throttle pulley on the throttle body assy after installing the upper ends of the throttle cables in the grip.
- After installation, adjust each cable properly (see Throttle Control System Inspection in the Periodic Maintenance chapter).

⚠ WARNING

Operation with incorrectly routed or improperly adjusted cables could result in an unsafe riding condition. Be sure the cables are routed correctly and properly adjusted.

Cable Lubrication

- Refer to the Chassis Parts Lubrication in the Periodic Maintenance chapter.

Air Intake Chamber

Air Intake Chamber Removal

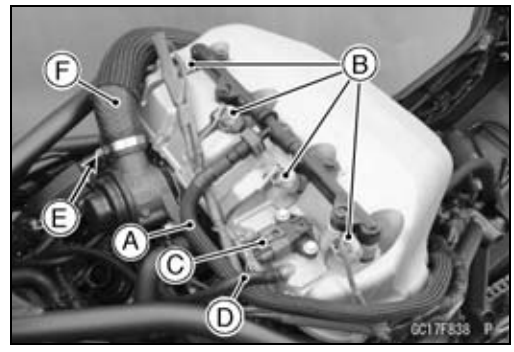

- Remove:
  Fuel Tank (see Fuel Tank Removal)
- Disconnect:
  Secondary Fuel Hose [A] (see Fuel Hose Replacement in the Periodic Maintenance chapter)
  Secondary Fuel Injector Connectors [B]
  Air Intake Chamber Pressure/Temperature Sensor Connector [C]
- Slide the clamp and disconnect the purge valve hose [D].
- Loosen the clamp screw [E] and disconnect the blow-off valve hose [F].

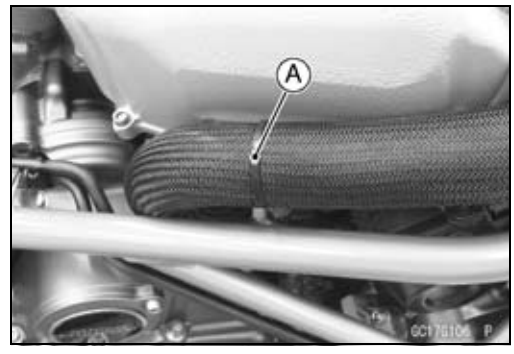

- Cut the band [A].



- Loosen the air intake hose clamp screw [A].

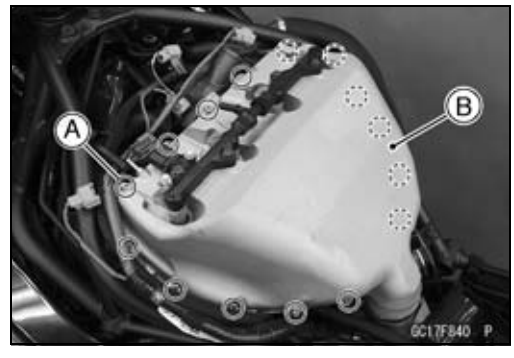

- Remove:
  Air Intake Chamber Assy Bolts [A]
  Air Intake Chamber Upper Housing [B]
- After removing the air intake chamber upper housing, stuff pieces of lint-free, clean cloth into the intake hose of supercharger.

NOTICE
If dirt gets into the supercharger, possible supercharger damage will occur.

Air Intake Chamber

- Disconnect the air switching valve hose [A].
- Slide the clamp [B], and disconnect the purge valve hose [C].

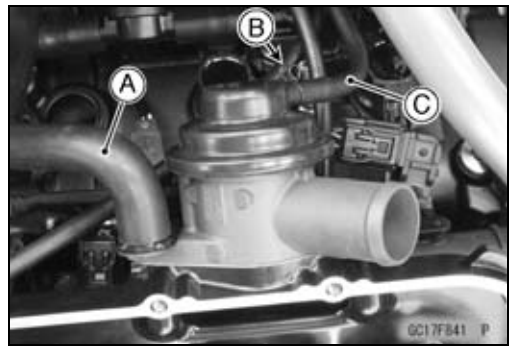

- Slide the dust cover and disconnect the throttle position sensor/ETV actuator connector [A].

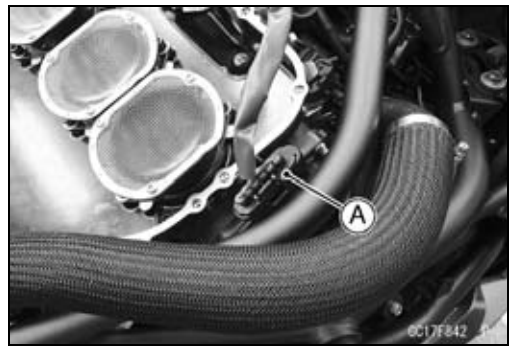

- Remove:
  Air Intake Chamber Duct Screen Bolts [A]
  Air Intake Chamber Duct Screens [B]

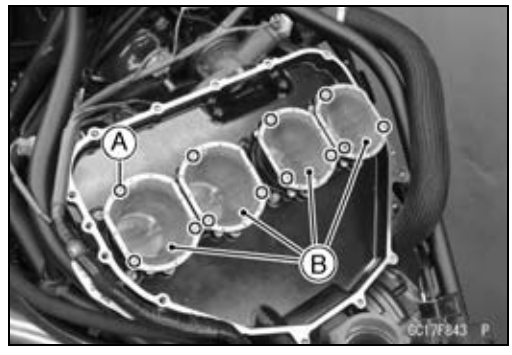

- Remove:
  Air Intake Chamber Duct Bolts [A]
  Air Intake Chamber Ducts [B]

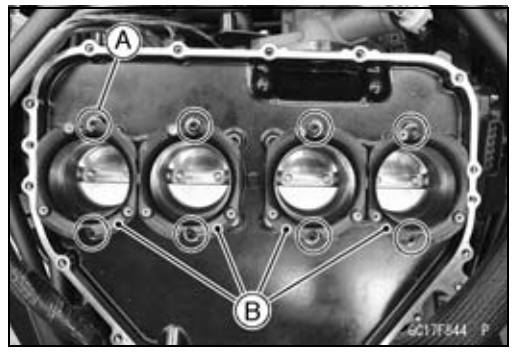

- Remove:
  Air Intake Chamber Mounting Bolts (L = 95 mm) [A] and Washers
  Air Intake Chamber Mounting Bolts (L = 14 mm) [B] and Washers
  Air Intake Chamber Lower Housing [C]

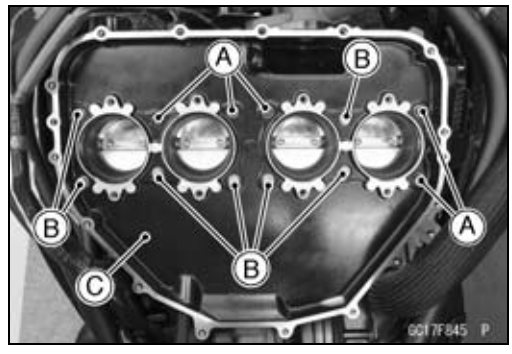

Air Intake Chamber

Air Intake Chamber Installation



- Replace the O-rings [A] with new ones.
- Install the air intake chamber lower housing.
- Apply a non-permanent locking agent to the air intake chamber mounting bolts.
- Replace the washers with new ones.
- Tighten the air intake chamber mounting bolts following the specified tightening sequence [1 ~ 12].

Torque - Air Intake Chamber Mounting Bolts (L = 95 mm)
[A]: 8.0 N·m (0.82 kgf·m, 71 in·lb)
Air Intake Chamber Mounting Bolts (L = 14 mm)
[B]: 8.0 N·m (0.82 kgf·m, 71 in·lb)

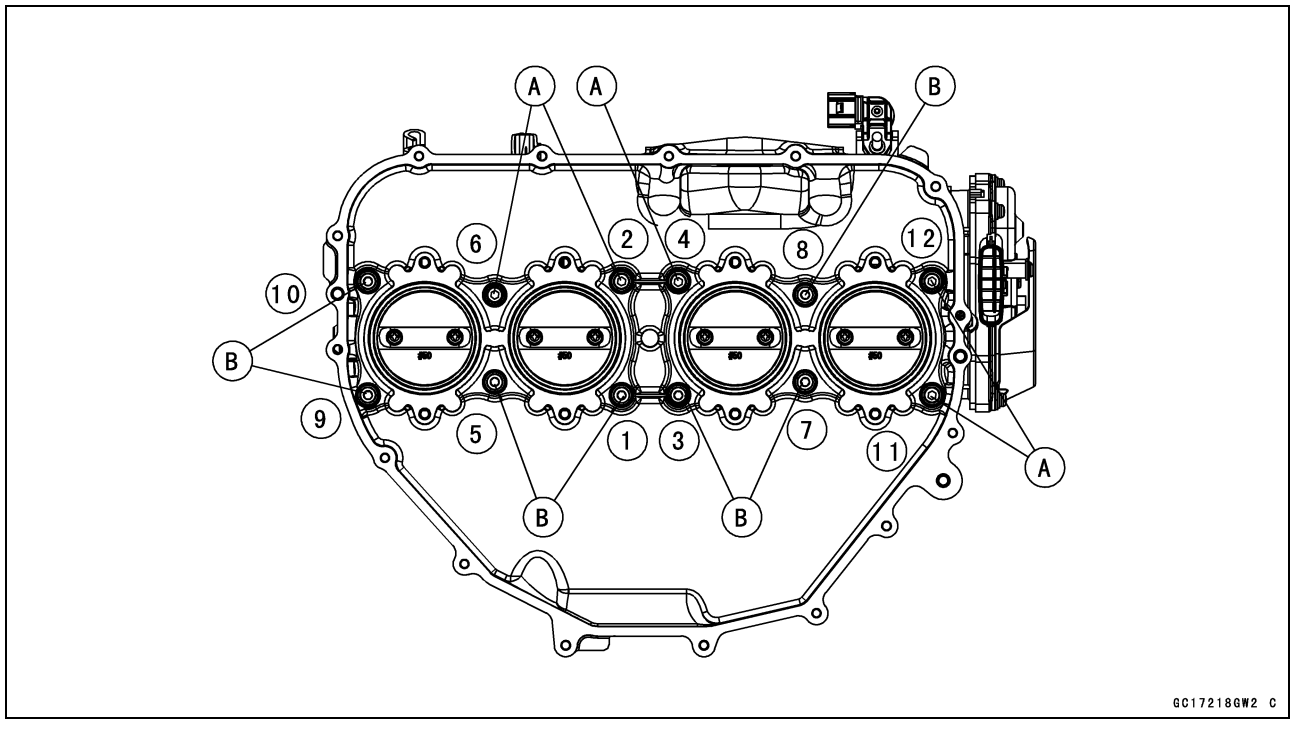

- Connect the air switching valve hose, the purge valve hose and the throttle position sensor/ETV actuator connector (see Cable, Wire, and Hose Routing section in the Appendix chapter).

Air Intake Chamber

- Apply a non-permanent locking agent to the air intake chamber duct bolts.
- Install the air intake chamber ducts [A] as shown, and tighten their bolts.
  Front Side [B]

Torque - Air Intake Chamber Duct Bolts [C]: 6.0 N·m (0.61 kgf·m, 53 in·lb)

- Apply a non-permanent locking agent to the air intake chamber duct screen bolts.
- Install the air intake chamber duct screens [D] so that the convex side faces downward, and tighten their bolts.

Torque - Air Intake Chamber Duct Screen Bolts [E]: 3.0 N·m (0.31 kgf·m, 27 in·lb)

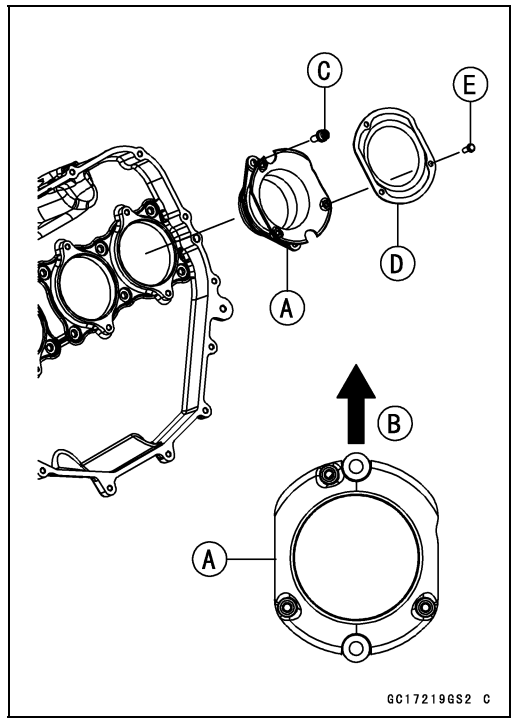

NOTICE

Do not use this motorcycle without the air intake chamber duct screen. It may lead to serious damage to the engine when the supercharger has trouble.

- Connect the purge valve hose and the air switching valve hose (see Cable, Wire, and Hose Routing section in the Appendix chapter).

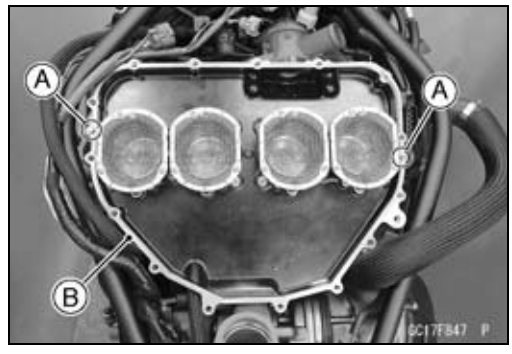

- Check that dowel pins [A] are in place on air intake chamber lower housing.
- Replace the air intake chamber gasket [B] with a new one.
- Install the air intake chamber upper housing, and tighten its bolts.

Torque - Air Intake Chamber Bolts: 8.0 N·m (0.82 kgf·m, 71 in·lb)
Air Intake Hose Clamp Screw: 3.0 N·m (0.31 kgf·m, 27 in·lb)

- Connect the secondary fuel injector connectors, the air intake chamber pressure/temperature sensor connector, the blow-off valve hose and the purge valve hose (see Cable, Wire, and Hose Routing section in the Appendix chapter).

Torque - Blow-off Valve Hose Clamp Screw: 3.0 N·m (0.31 kgf·m, 27 in·lb)

- Connect the secondary fuel hose to the delivery pipe of the nozzle assy (see Fuel Hose Replacement in the Periodic Maintenance chapter).
- Install the removed parts (see appropriate chapters).

Air Intake Chamber

Blow-off Valve Removal

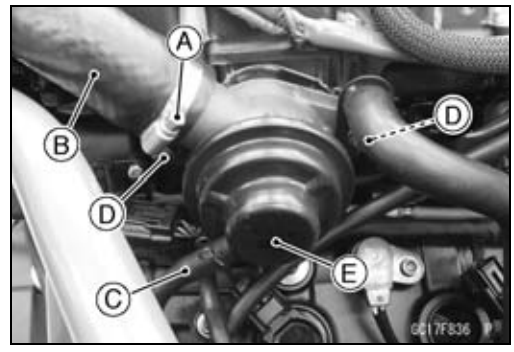

- Remove:
  Fuel Tank (see Fuel Tank Removal)
- Loosen the clamp screw [A] and disconnect the blow-off valve hose [B].
- Slide the clamp and disconnect the purge valve hose [C].
- Remove:
  Blow-off Valve Bolts [D]
  Blow-off Valve [E]

Blow-off Valve Installation

- Replace the gasket with a new one.
- Apply a non-permanent locking agent to the blow-off valve bolts.
- Install the blow-off valve and tighten its bolts.

Torque - Blow-off Valve Bolts: 25 N·m (2.5 kgf·m, 18 ft·lb)

- Connect the blow-off valve hose and purge valve hose (see Cable, Wire, and Hose Routing section in the Appendix chapter).

Torque - Blow-off Valve Hose Clamp Screw: 3.0 N·m (0.31 kgf·m, 27 in·lb)

- Install the removed parts (see appropriate chapters).

Blow-off Valve Inspection

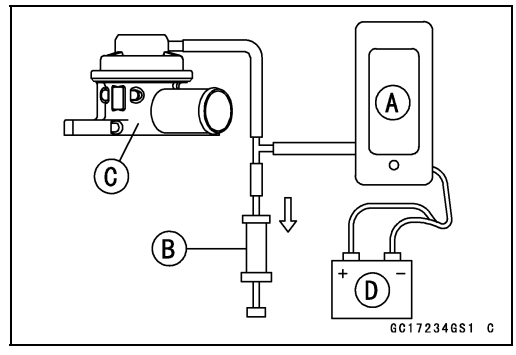

- Remove:
  Blow-off Valve (see Blow-off Valve Removal)
- Connect a commercially available vacuum gauge [A] and syringe [B] or vacuum pump to the blow-off valve [C] as shown.
  Battery [D]
- Gradually raise the vacuum applied to the blow-off valve, and check the valve operation.

Valve Opening Wide	Vacuum Pressure
About 0.5 mm (0.02 in.)	62.8 ±4 kPa (471 mmHg)
About 7.5 mm (0.30 in.) (Full Open)	107.9 ±7.3 kPa (809 mmHg)

★If the blow-off valve does not operate, replace it with a new one.

Purge Valve (for Supercharger) Removal/Installation

- Refer to the Purge Valve (for Supercharger) Removal/Installation in the Self-Diagnosis System chapter.

Purge Valve (for Supercharger) Inspection

- Refer to the Purge Valve (for Supercharger) Inspection in the Self-Diagnosis System chapter.

Throttle Body Assy

Idle Speed Inspection/Adjustment

- Refer to the Idle Speed Inspection/Adjustment in the Periodic Maintenance chapter.

Synchronization Inspection

- Refer to the Engine Vacuum Synchronization Inspection in the Periodic Maintenance chapter.

Throttle Body Assy Removal

⚠ WARNING

Gasoline is extremely flammable and can be explosive under certain conditions, creating the potential for serious burns. Make sure the area is well ventilated and free from any source of flame or sparks; this includes any appliance with a pilot light. Do not smoke. Turn the ignition switch off. Be prepared for fuel spillage; any spilled fuel must be completely wiped up immediately.

NOTICE

Never drop the throttle body assy especially on a hard surface. Such a shock to the body assy can damage it.

NOTE

○*When replace the throttle body assy with a new one or reused one from another motorcycle, you must register the accelerator position and throttle position data of the throttle body to the ECU. Erase the stored service code memory using Kawasaki Diagnostic System (KDS Ver.3), and wait the 10 seconds at the idle speed and the coolant temperature 40°C (104°F) or more to register the sensor position to the ECU.*

- Remove:
  Air Intake Chamber (Air Intake Chamber Removal)
  Fuel Hoses (see Fuel Hose Replacement in the Periodic Maintenance chapter)

- Disconnect:
  Accelerator Position Sensor Connector [A]
  Atmospheric Pressure Sensor Connector [B]
  Intake Air Pressure Sensor Connector [C]
- Slide the clamp, and disconnect the purge valve hose [D].

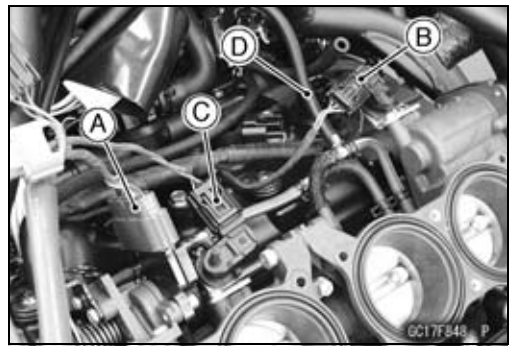

Throttle Body Assy

- Cut the bands [A].

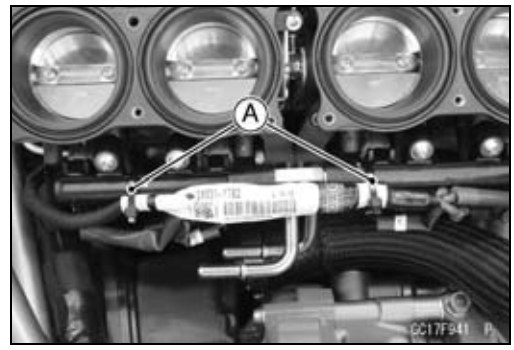

- Disconnect the primary fuel injector connectors [A].

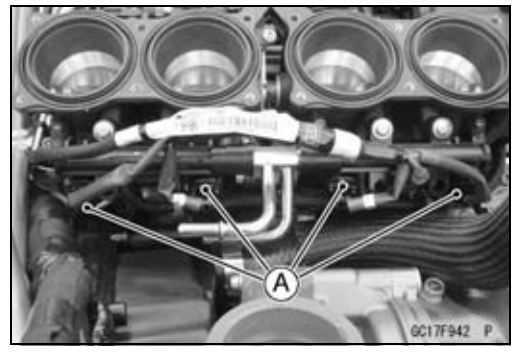

- Loosen the locknuts [A].
- Turn the adjusters [B] to give the more free play.



- Remove:
  Throttle Cable Holder Clamp [A]
  Throttle Cable Lower Ends [B]

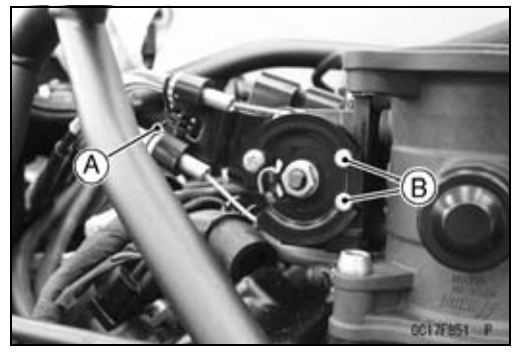

- Remove:
  Throttle Body Assy Mounting Bolts [A]
  Throttle Body Assy [B]
- After removing the throttle body assy, stuff pieces of lint -free, clean cloth into the throttle body assy holders.

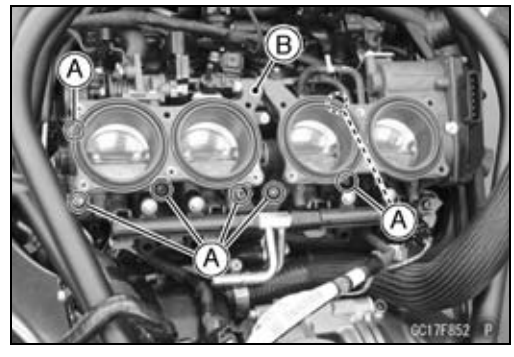

NOTICE
If dirt gets into the engine, excessive engine wear and possible engine damage will occur.

Throttle Body Assy

Throttle Body Assy Installation

- Replace the O-rings [A] with new ones.

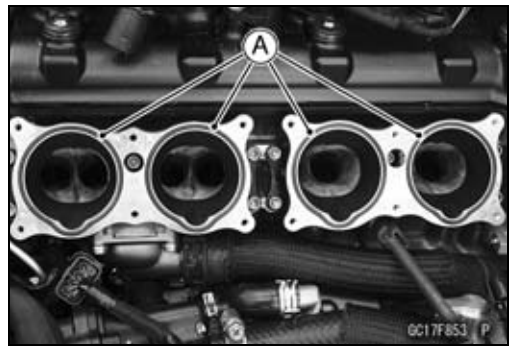

- Install the throttle body assy [A].
- Tighten the throttle body assy mounting bolts [B] as shown.

Torque - Throttle Body Assy Mounting Bolts: 10 N·m (1.0 kgf·m, 89 in·lb)

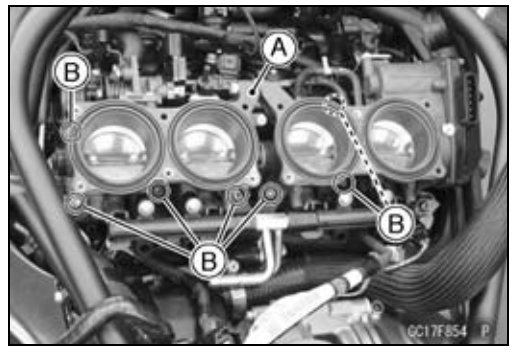

- Apply a thin coat of grease to the throttle cable lower ends.
- Fit the accelerator cable end [A] and the decelerator cable end [B] into the throttle pulley.
- Install the clamp securely.

○The accelerator cable has a clamp [C].

- Connect the primary fuel injector connectors, the atmospheric pressure sensor connector, the intake air pressure sensor connector and the purge valve hose (see Cable, Wire, and Hose Routing section in the Appendix chapter).
- Connect the fuel hoses to the throttle body assy (see Fuel Hose Replacement in the Periodic Maintenance chapter).
- Install the removed parts (see appropriate chapters).
- Adjust:

  Throttle Grip Free Play (see Throttle Control System Inspection in the Periodic Maintenance chapter)

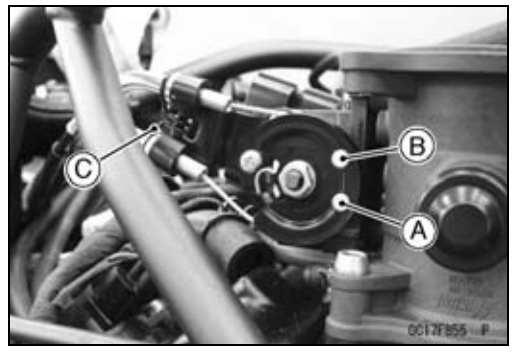

Throttle Body Assy

Throttle Body Assy Disassembly

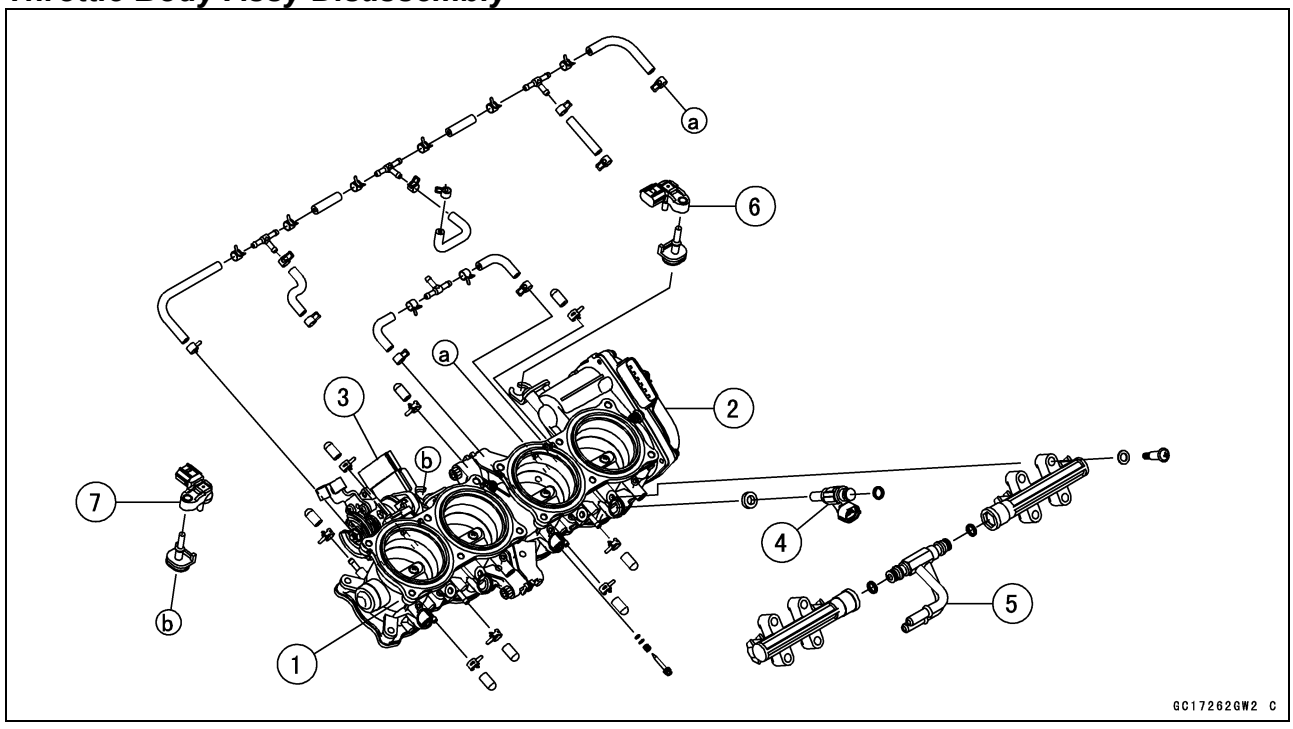

1. Throttle Body Assy
2. Throttle Position Sensor/ETV Actuator
3. Accelerator Position Sensor
4. Primary Fuel Injectors
5. Delivery Pipe Assy
6. Atmospheric Pressure Sensor
7. Intake Air Pressure Sensor

NOTICE

Do not remove, disassemble or adjust the throttle position sensor/ETV actuator, accelerator position sensor, throttle link mechanism and throttle body assy, because they are adjust or set surely at the manufacturer. Adjustment of these parts could result in poor performance, requiring replacement of the throttle body assy.

- Remove the throttle body assy (see Throttle Body Assy Removal).
- Remove the delivery pipe assy mounting screws [A] and washers to pull out the primary fuel injectors [B] from the throttle body assy together with the delivery pipe assy [C].

NOTE

○*Do not damage the insertion portions of the injectors when they are pulled out from the throttle body assy.*

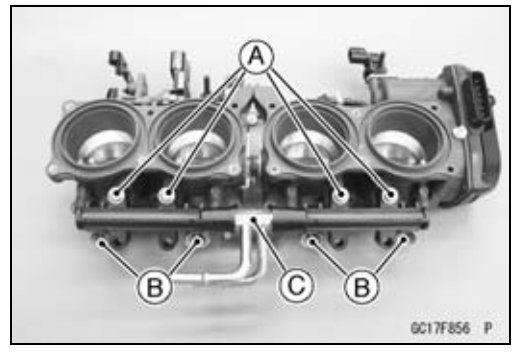

Throttle Body Assy

● Remove the primary fuel injectors [A] from the delivery pipe assy [B].

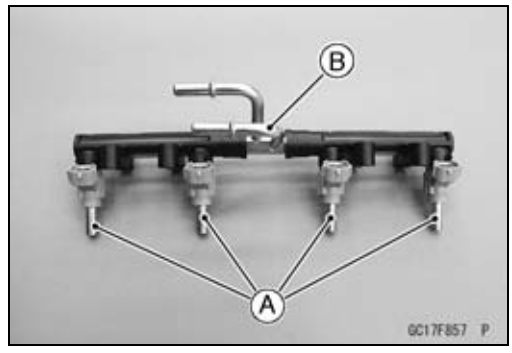

NOTE

○*Do not damage the insertion portions of the injectors when they are pulled out from the delivery pipe assy.*

NOTICE

Never drop the primary fuel injector especially on a hard surface. Such a shock to the injector can damage it.

Throttle Body Assy Assembly

⚠ WARNING

Gasoline is extremely flammable and can be explosive under certain conditions, creating the potential for serious burns. Make sure the area is well ventilated and free from any source of flame or sparks; this includes any appliance with a pilot light. Do not smoke. Turn the ignition switch off. Be prepared for fuel spillage; any spilled fuel must be completely wiped up immediately.

● Before assembling, blow away dirt or dust from the throttle body and delivery pipe assy by applying compressed air.

● Replace the O-rings [A] of the joint pipe [B] with new ones.
● Apply engine oil to the new O-rings, and insert it to the delivery pipes [C].
○Left and right delivery pipes are identical.

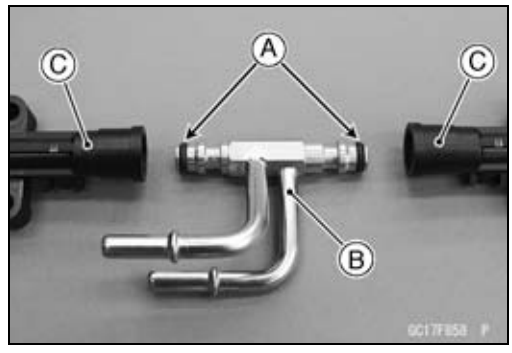

● Replace the O-ring [A] of each primary fuel injector [B] with new ones.
● Apply engine oil to the new O-rings, insert them to the delivery pipe assy [C] and confirm whether the injectors turn smoothly or not.

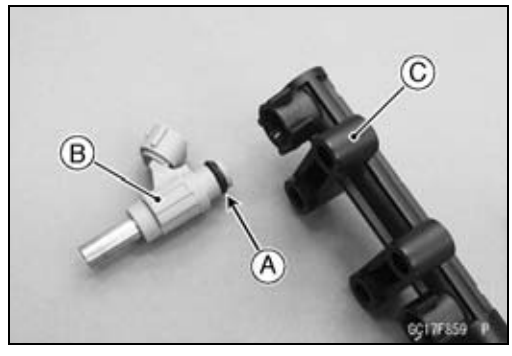

Throttle Body Assy

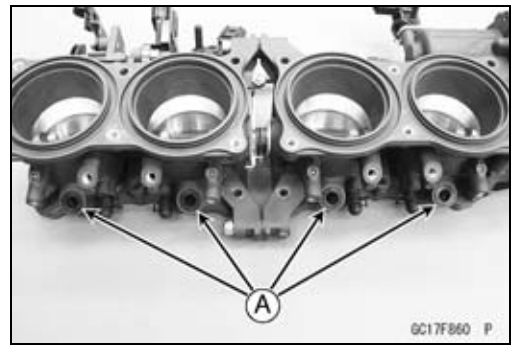

- Replace the dust seals [A] with new ones.
- Apply engine oil to the new dust seals.
- Install the primary fuel injectors along with the delivery pipe assy to the throttle body assy.
- Replace the washers with new ones.
- Tighten:

Torque - Delivery Pipe Assy Mounting Screws: 3.5 N·m (0.36 kgf·m, 31 in·lb)

- Install the throttle body assy (see Throttle Body Assy Installation).

Nozzle Assy

Nozzle Assy Removal

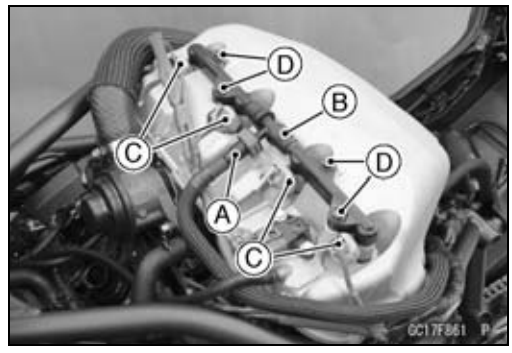

- Remove the fuel tank (see Fuel Tank Removal).
- Disconnect the secondary fuel hose [A] from the delivery pipe assy of the nozzle assy [B] (see Fuel Hose Replacement in the Periodic Maintenance chapter).
- Disconnect the secondary fuel injector connectors [C].
- Remove:
  Nozzle Assy Mounting Bolts [D]
  Nozzle Assy

Nozzle Assy Installation

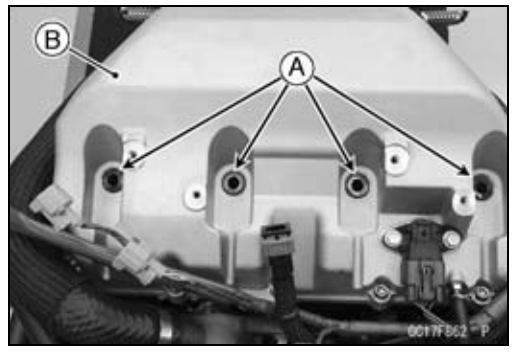

- Replace the dust seals [A] with new ones.
- Apply engine oil to the new dust seals, and install them.
- Install the nozzle assy securely.

○Push the four mounting positions of the injectors.
○Set the joint pipe parallel to the intake air chamber [B].

NOTICE

When installing the nozzle assy, apply force equally to the delivery pipe assy.
Pushing the fuel pipe strongly could damage it as it is made from resin.

- Apply a non-permanent locking agent to the nozzle assy mounting bolts.
- Tighten:

Torque - Nozzle Assy Mounting Bolts: 6.5 N·m (0.66 kgf·m, 58 in·lb)

- Run the leads correctly (see Cable, Wire, and Hose Routing section in the Appendix chapter).
- Connect the secondary fuel hose to the delivery pipe of the nozzle assy (see Fuel Hose Replacement in the Periodic Maintenance chapter).

Nozzle Assy Disassembly

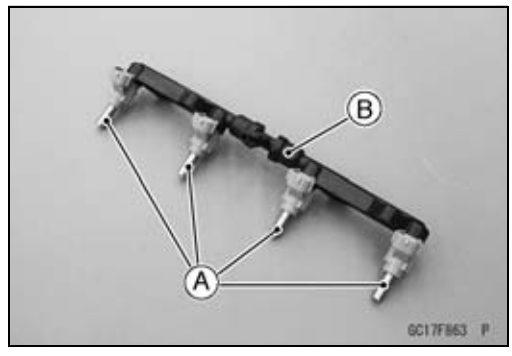

- Remove the nozzle assy (see Nozzle Assy Removal).
- Pull out the secondary fuel injectors [A] from the delivery pipe assy [B].

NOTE

○*Do not damage the insertion portions of the injectors when they are pulled out from the delivery pipe assy.*

NOTICE

Never drop the secondary fuel injector especially on a hard surface. Such a shock to the injector can damage it.

- Separate the delivery pipe assy.

Nozzle Assy

Nozzle Assy Assembly

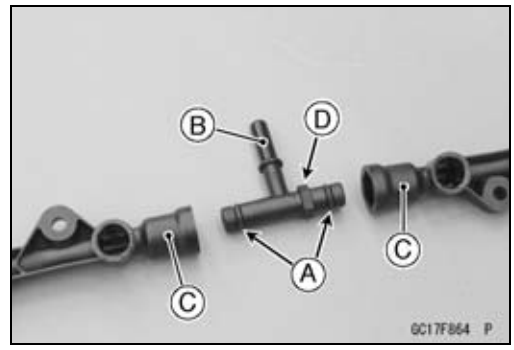

- Replace the O-rings [A] of the joint pipe [B] with new ones.
- Apply engine oil to the new O-rings, and insert it to the delivery pipes [C].

○Insert the joint pipe so that the stepped side [D] faces right side.

○Left and right delivery pipes are identical.

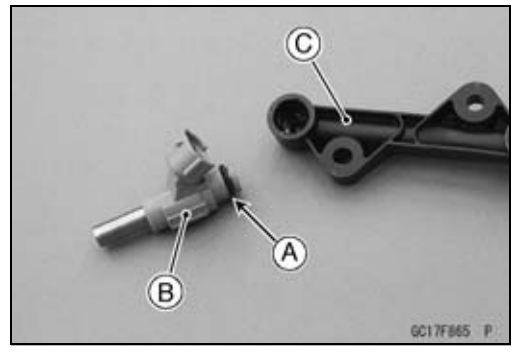

- Replace the O-ring [A] of each secondary fuel injector [B] with new ones.
- Apply engine oil to the new O-rings, and insert them to the delivery pipe assy [C] and confirm whether the injectors turn smoothly or not.
- Install the nozzle assy (see Nozzle Assy Installation).

Air Cleaner

Air Cleaner Element Removal/Installation

- Refer to the Air Cleaner Element Replacement in the Periodic Maintenance chapter.

Air Cleaner Element Inspection

- Remove the air cleaner element (see Air Cleaner Element Replacement in the Periodic Maintenance chapter).
- Visually check the element [A] for tears or breaks.

★If the element has any tears or breaks, replace the element.

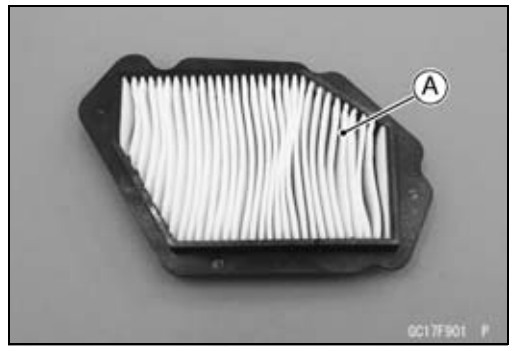

Air Cleaner Oil Draining

A drain hose is connected to the bottom of the air cleaner housing to drain water or oil accumulated in the cleaner part.

- Visually check the plug [A] of the drain hose, if the water or oil accumulates in the plug.

★If any water or oil accumulates in the plug, remove the plug from the drain hose and drain it.

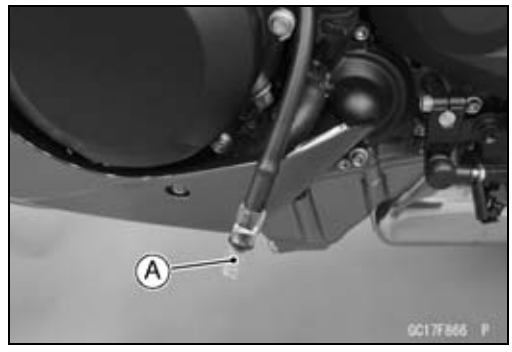

⚠ WARNING

Oil on tires will make them slippery and can cause an accident and injury. Be sure to reinstall the plug in the drain hose after draining.

Air Cleaner Housing Removal

- Remove:
  Air Cleaner Element (see Air Cleaner Element Replacement in the Periodic Maintenance chapter)
  Throttle Body Assy (see Throttle Body Assy Removal)

- Remove the air cleaner housing mounting bolts [A].
- Slide the clamp [B], and disconnect the breather hose [C].
- Remove the air cleaner housing [D] together with the blow-off valve hose.

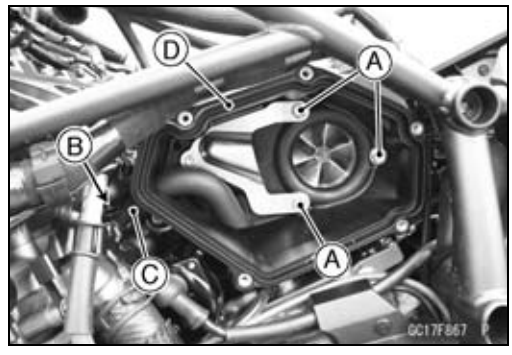

- Loosen the blow-off valve hose clamp screw [A].
- Disconnect the blow-off valve hose [B].

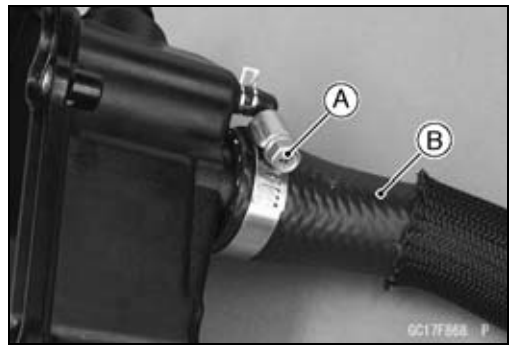

Air Cleaner

- Remove:
  Air Cleaner Housing Inner Plate Bolt
  Inner Plate [B]

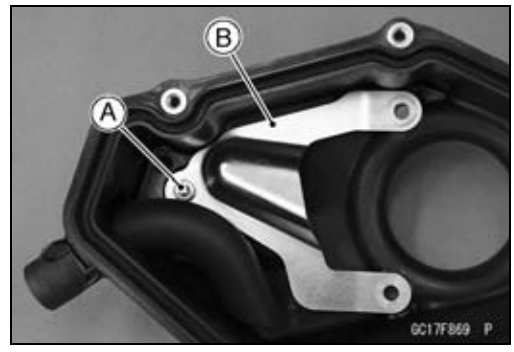

Air Cleaner

Air Cleaner Housing Installation

- Install the blow-off valve hose [A], and tighten its clamp screw [B] (see Cable, Wire, and Hose Routing section in the Appendix chapter).

Torque - Blow-off Valve Hose Clamp Screw: 3.0 N·m (0.31 kgf·m, 27 in·lb)

- Install the inner plate [C].
- Apply a non-permanent locking agent to the air cleaner housing inner plate bolt [D], and tighten it.

Torque - Air Cleaner Housing Inner Plate Bolt: 6.0 N·m (0.61 kgf·m, 53 in·lb)

- Replace the O-ring [E] with a new one.
- Apply grease to the O-ring, and install it.
- Using a high flash-point solvent, clean off any oil or dirt that may be on the liquid gasket coating area. Dry them with a clean cloth.
- Apply liquid gasket to the air cleaner housing.
  Liquid Gasket Coating Area [F]
  Viewed from S [G]

Sealant - Liquid Gasket, TB1207B: 92104-2068

- Install the air cleaner housing, and tighten their bolts.

○Insert the breather hose so that the pinch of the clamp [H] faces outward.

Torque - Air Cleaner Housing Mounting Bolts [I]: 10 N·m (1.0 kgf·m, 89 in·lb)

- Install the removed parts (see appropriate chapters).

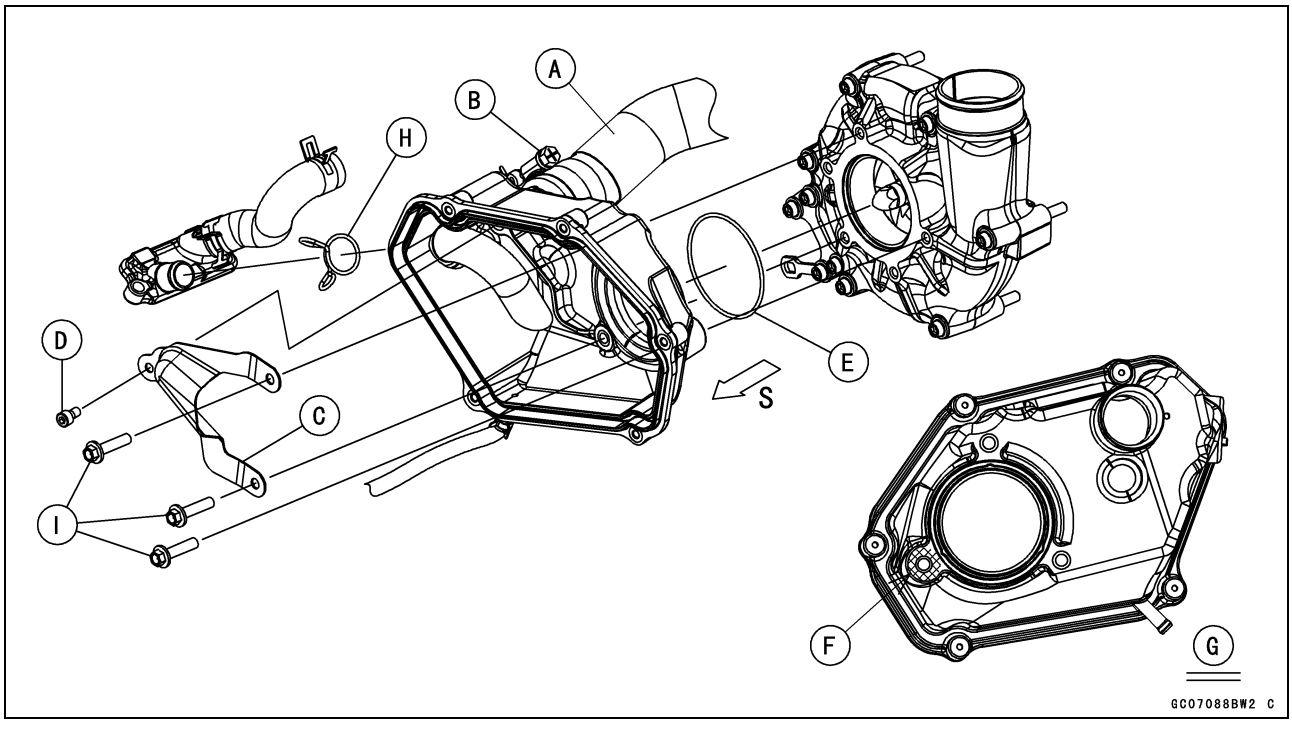

Supercharger

Supercharger Chain Tensioner Removal

- Remove:
  Throttle Body Assy (see Throttle Body Assy Removal)
  Clutch Cover (see Clutch Cover Removal in the Clutch chapter)
  Supercharger Chain Tensioner Mounting Bolts [A]
  Supercharger Chain Tensioner [B]

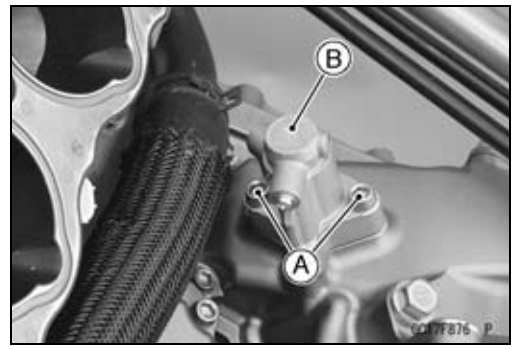

Supercharger Chain Tensioner Installation

NOTE

○ *Some noise from the super charger tensioner could occur when replacing the tensioner or when starting vehicle after long storage. However, if there is no problem on the function of the tensioner, that noise will disappear after riding for a while.*

- Opening the snap ring [A], release it and turn the tensioner body [B] clockwise while holding the push rod [C].

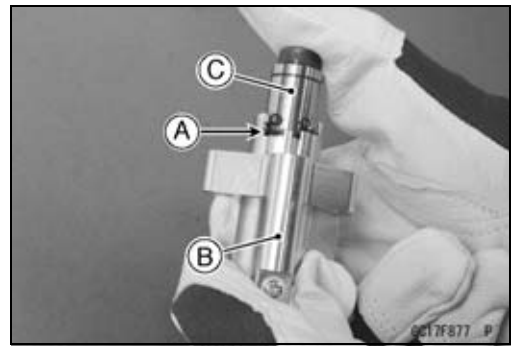

- Turning the tensioner body clockwise, slide the stopper [A] into the groove [B] of the push rod [C].

NOTE

○*Be careful not to fit the snap ring [D] into the groove.*

Good [E]
Bad [F]

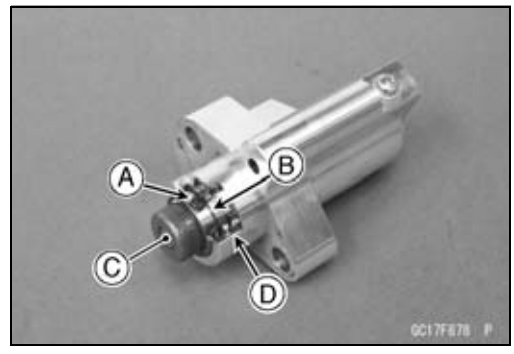

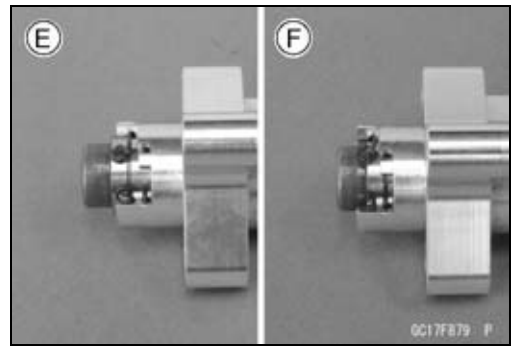

- Replace the gasket [A] with a new one.
- Apply a non-permanent locking agent to the supercharger chain tensioner bolts.
- Install the tensioner body [B] slowly, and tighten its bolts.

Torque - Supercharger Chain Tensioner Mounting Bolts: 10 N·m (1.0 kgf·m, 89 in·lb)

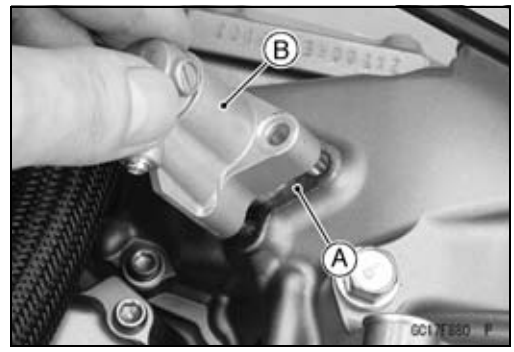

- Push the upper chain guide [A] upward to allow the tensioner to expand.

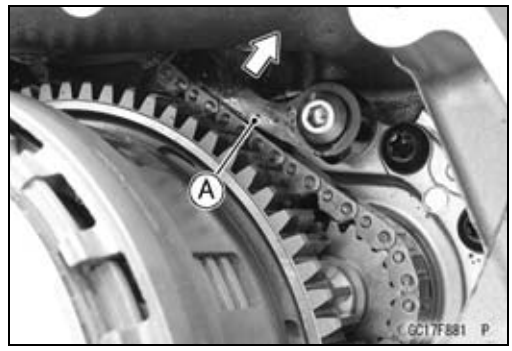

NOTE

○*You hear the sound from which the push rod moves out.*
○*If you do not hear the sound, reassemble the camshaft chain tensioner.*

NOTICE
If you start the engine in case that the sound cannot be heard, the engine may be damaged.

- Install the removed parts (see appropriate chapters).

Supercharger Housing Assy Removal

- Remove:
  Air Cleaner Housing (see Air Cleaner Housing Removal)
  Clutch (see Clutch Removal in the Clutch chapter)

- Remove:
  Brake Pipe Clamp Bolt [A]
  Clamp [B]

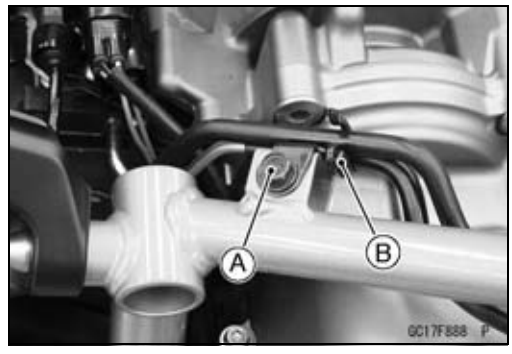

- Remove:
  Supercharger Sprocket Cover Bolts [A]



- Insert a flat tip screwdriver to the pry points [A], and remove the supercharger sprocket cover [B].

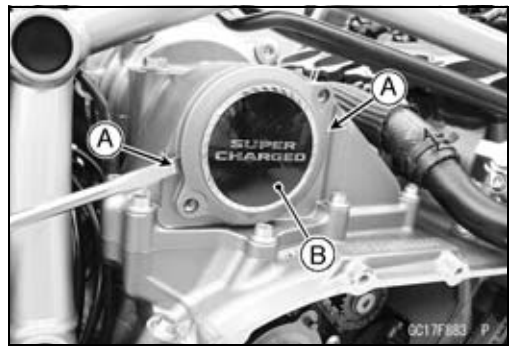

Supercharger

- Remove:
  Supercharger Chain Sprocket Bolt [A]
  Washer [B]

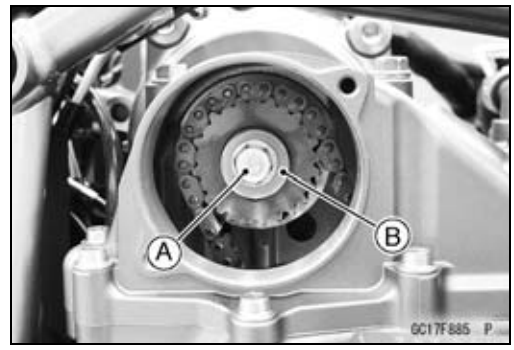

- Remove:
  Supercharger Chain Tensioner (see Supercharger Chain Tensioner Removal)
  Chain Guide Bolts [A]
  Upper Chain Guide [B] and Collar
  Lower Chain Guide [C] and Collars
  Supercharger Chain Upper Sprocket

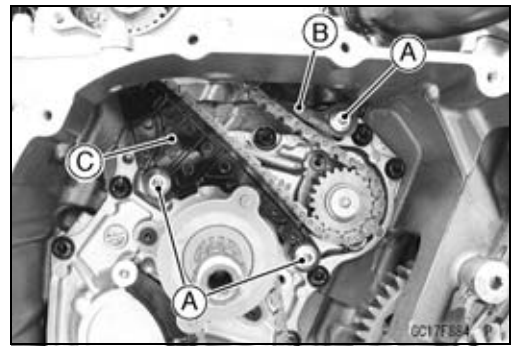

- Remove:
  Supercharger Chain [A]
  Supercharger Chain Sprocket Bolt [B]
  Washer [C]
  Supercharger Chain Lower Sprocket [D]

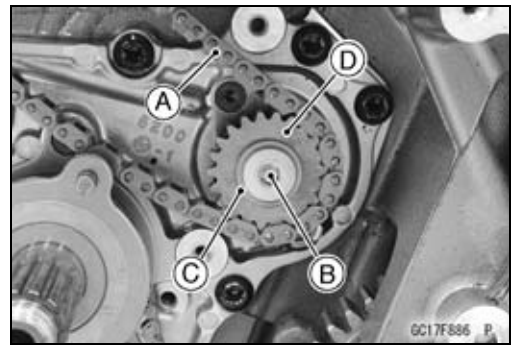

- Remove:
  Supercharger Housing Stay Bolts [A]
  Supercharger Housing Stay [B]

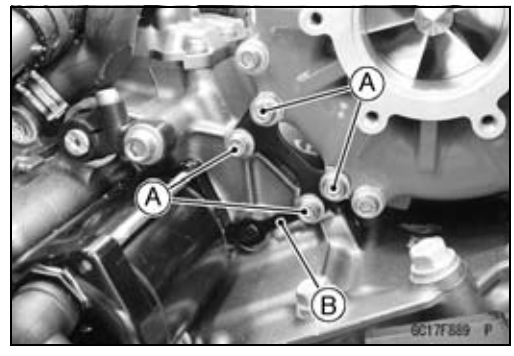

- Remove:
  Supercharger Housing Bolt (M8) [A] and Washer
  Supercharger Housing Bolts (M6) [B]
- Loosen the supercharger housing bolt (M8) [C].

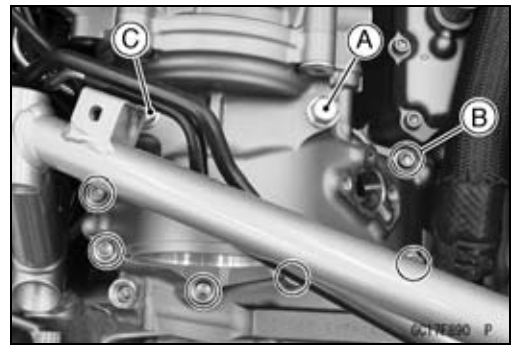

Supercharger

- Remove the supercharger housing bolt (M8) [A] while moving the supercharger housing assy [B].
- Remove the supercharger housing assy.

NOTE

○*Store the supercharger housing assy so that there are not contaminants adhering to it.*

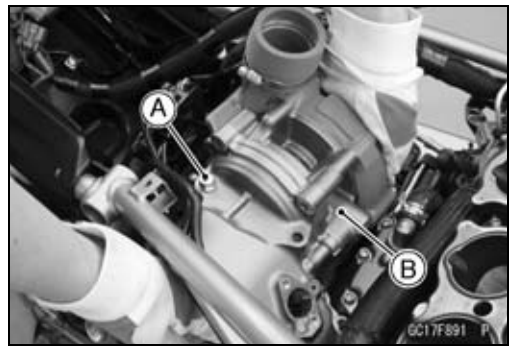

Supercharger Housing Assy Installation

- Check that dowel pins [A] are in place on the crankcase.
- Replace the gasket [B] with a new one.

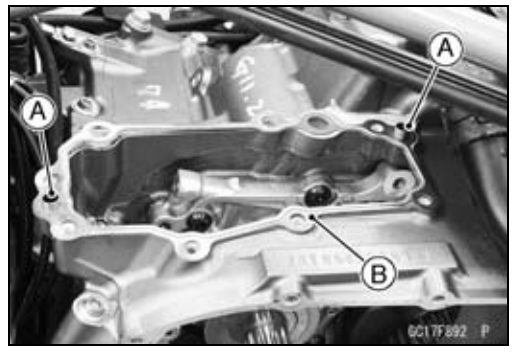

- Install the supercharger housing assy.
- Replace the washer [A] with a new one.
- Apply a non-permanent locking agent to the supercharger housing bolts (M6).
- Tighten:

Torque - Supercharger Housing Bolts (M8) [B]: 23 N·m (2.3 kgf·m, 17 ft·lb)
Supercharger Housing Bolts (M6, L = 30 mm) [C]: 10 N·m (1.0 kgf·m, 89 in·lb)
Supercharger Housing Bolt (M6, L = 20 mm) [D]: 10 N·m (1.0 kgf·m, 89 in·lb)

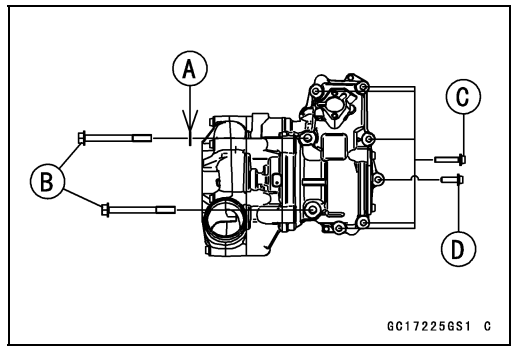

- Apply a non-permanent locking agent to the supercharger housing stay bolts.
- Install the supercharger housing stay [A], and tighten its bolts.

Torque - Supercharger Housing Stay Bolts [B]: 10 N·m (1.0 kgf·m, 89 in·lb)

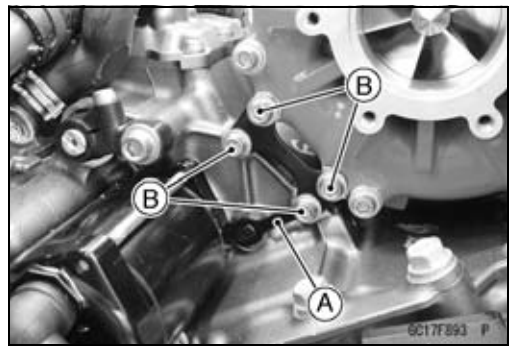

Supercharger

- Install the supercharger chain upper sprocket [A] so that the boss side [B] faces the supercharger side.

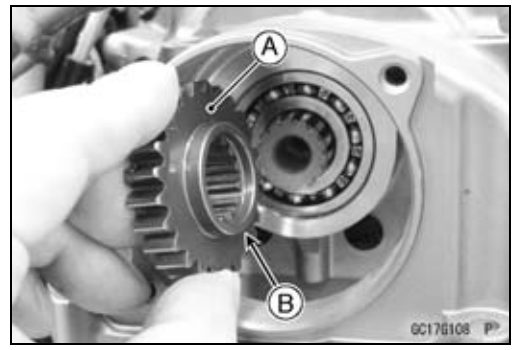

- Install the supercharger chain [A] to the sprocket.
- Apply a non-permanent locking agent to the supercharger chain sprocket bolt [B], and tighten it together with the washer [C] temporarily.

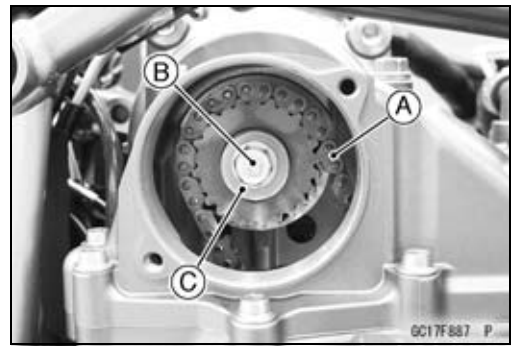

- Install the supercharger chain lower sprocket [A] so that the boss side [B] faces the engine side, and engage the supercharger chain with the lower sprocket.

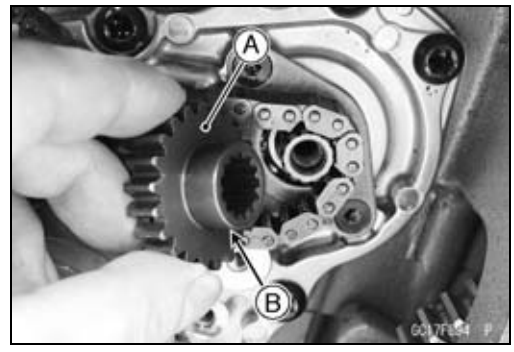

- Apply a non-permanent locking agent to the supercharger chain sprocket bolt [A], and tighten it together with the washer [B].

Torque - Supercharger Chain Sprocket Bolt (Lower): 20 N·m (2.0 kgf·m, 15 ft·lb)

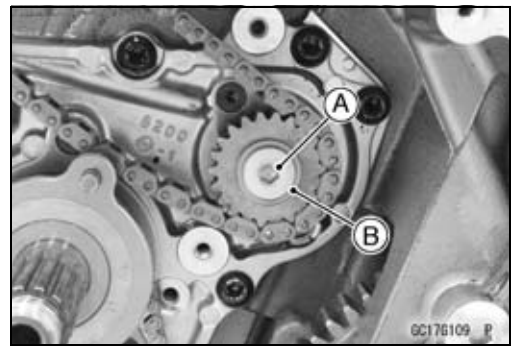

- Install:
  Collars [A]
  Upper Supercharger Chain Guide [B]
  Lower Supercharger Chain Guide [C]
- Tighten:

Torque - Supercharger Chain Guide Bolts [D]: 10 N·m (1.0 kgf·m, 89 in·lb)

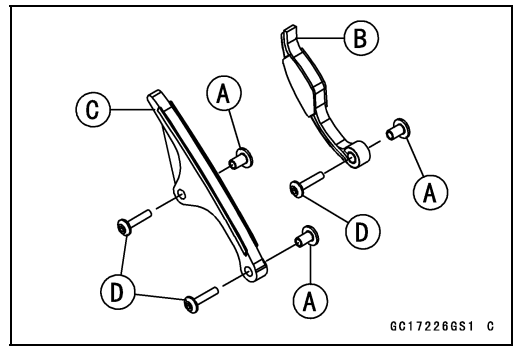

Supercharger

- Install the supercharger chain tensioner (see Supercharger Chain Tensioner Installation).
- Tighten the supercharger chain sprocket bolt [A] on the upper sprocket.

Torque - Supercharger Chain Sprocket Bolt (Upper): 25 N·m (2.5 kgf·m, 18 ft·lb)

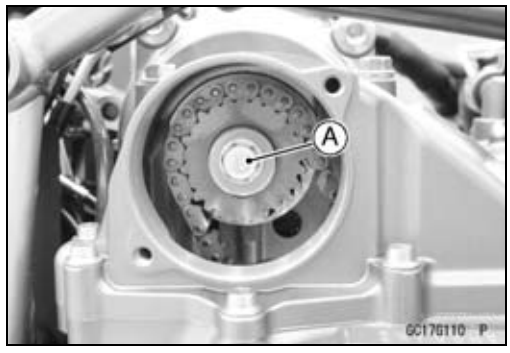

- Replace the O-ring [A] with a new one.
- Apply grease to the O-ring, and install it.
- Install the supercharger sprocket cover [B], and tighten its bolts.

Torque - Supercharger Sprocket Cover Bolts: 10 N·m (1.0 kgf·m, 89 in·lb)

- Install the removed parts (see appropriate chapters).

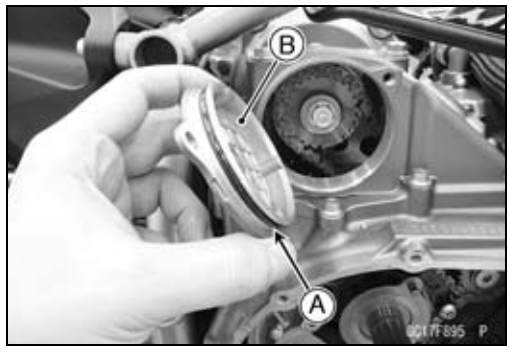

Supercharger Outer Housing Removal

- Remove:
  Supercharger Housing Assy (see Supercharger Housing Assy Removal)
  Supercharger Outer Housing Bolts [A]
  Supercharger Outer Housing [B]

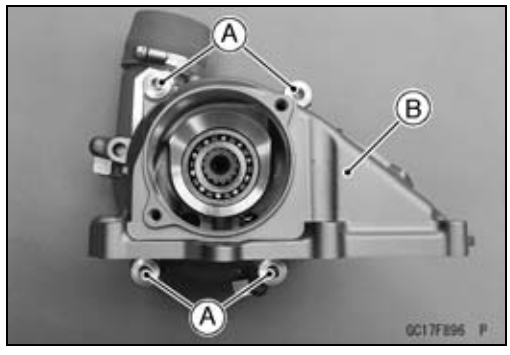

- Remove:
  Ring Gear [A]

NOTICE
Do not disassemble the supercharger impeller housing assy [B], because it is adjust or set surely at the manufacturer. Adjust of its parts could result in poor performance, requiring replacement of the supercharger impeller housing assy.

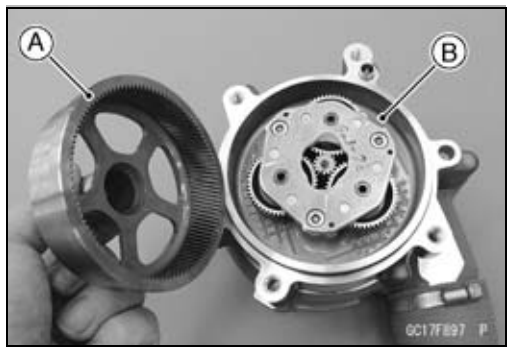

Supercharger Outer Housing Installation

- Install the ring gear.
- Replace the O-rings [A] with new ones.
- Apply grease to the O-rings, and install them.



Supercharger

- Install the fitting [A].
- Check that dowel pin [B] is in place on the supercharger impeller housing.

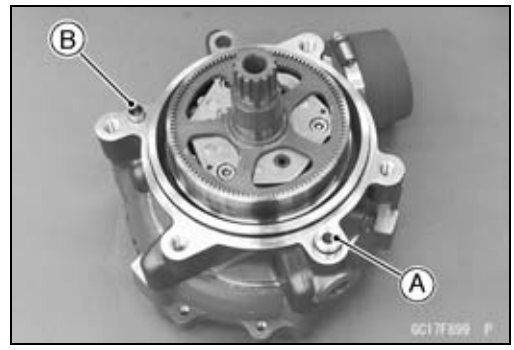

- Install the supercharger outer housing [A], and tighten its bolts following specified tightening sequence [1 ~ 4].

Torque - Supercharger Outer Housing Bolts: 23 N·m (2.3 kgf·m, 17 ft·lb)

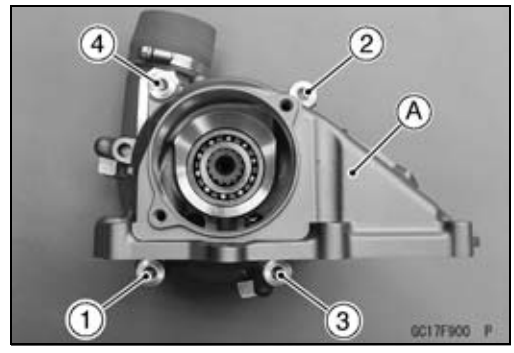

Fuel Tank

Fuel Tank Removal

⚠ WARNING

Gasoline is extremely flammable and can be explosive under certain conditions, creating the potential for serious burns. Make sure the area is well ventilated and free from any source of flame or sparks; this includes any appliance with a pilot light. Do not smoke. Turn the ignition switch off. Disconnect the battery (–) terminal. To avoid fuel spills, draw it from the tank when the engine is cold. Be prepared for fuel spillage; any spilled fuel must be completely wiped up immediately.

- Turn the ignition switch off.
- Wait until the engine cools down.
- Disconnect the battery (–) terminal (see Battery Removal in the Electrical System chapter).

- Open the fuel tank cap [A] to lower the pressure in the tank.

○During tank removal, keep the tank cap open to release pressure in the tank. This makes fuel spillage less.

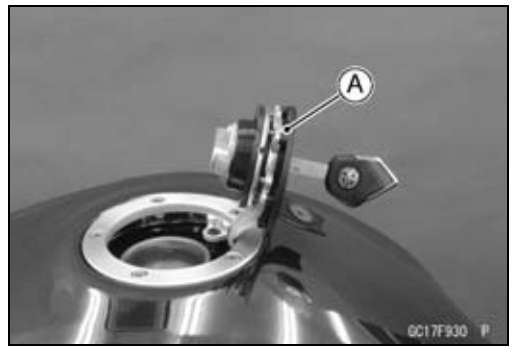

- Draw the fuel out from the fuel tank with a commercially available pump [A].

○Use a soft plastic hose [B] as a pump intake hose in order to insert the hose smoothly.

○Put the hose through the fill opening [C] into the tank and draw the fuel out.

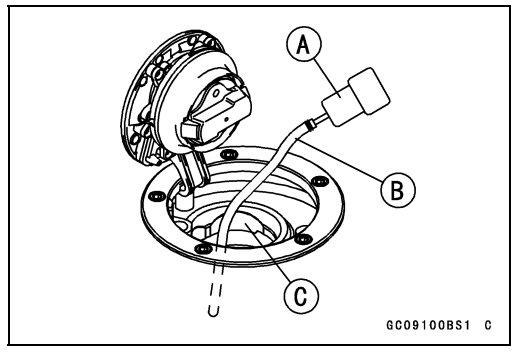

⚠ WARNING

Spilled fuel is flammable and can be explosive under certain conditions. The fuel can not be removed completely from the fuel tank. Be careful for remained fuel spillage.

- Remove:
  Inner Covers (see Inner Cover Removal in the Frame chapter)
  Fuel Tank Covers (see Fuel Tank Cover Removal in the Frame chapter)
  Side Covers (see Side Cover Removal in the Frame chapter)
  Fuel Tank Bolts [A] and Washer



Fuel Tank

- Disconnect the fuel pump lead connector [A].
- Remove the fuel tank bolts [B].

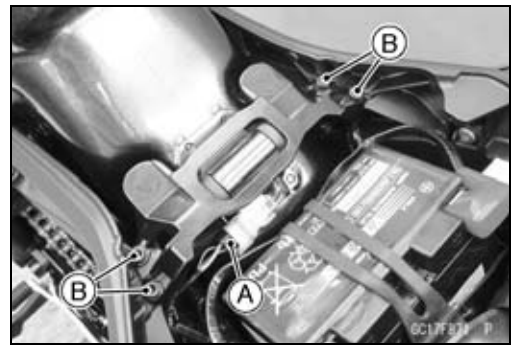

- Slide the clamps, and disconnect the hoses [A].

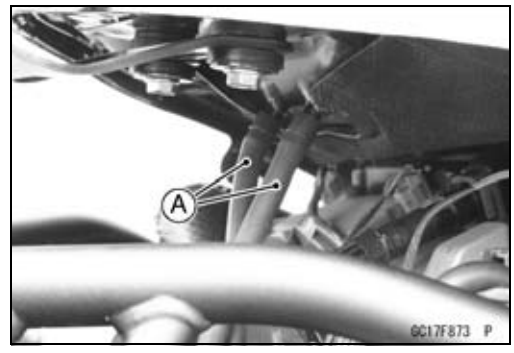

- Be sure to place a piece of cloth around the fuel hose joint.
- Wipe off the dirt of the surface [A] around the connection using a cloth or a soft brush.

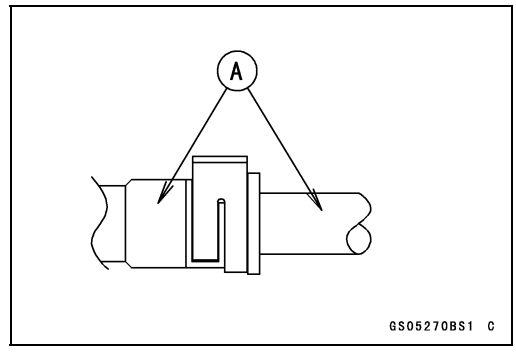

When removing with flat tip screwdriver

- Insert the flat tip screwdriver [A] into slit on the joint lock [B].
- Turn the driver to disconnect the joint lock.

When removing with fingers

- Open and push up [C] the joint lock with your fingers.

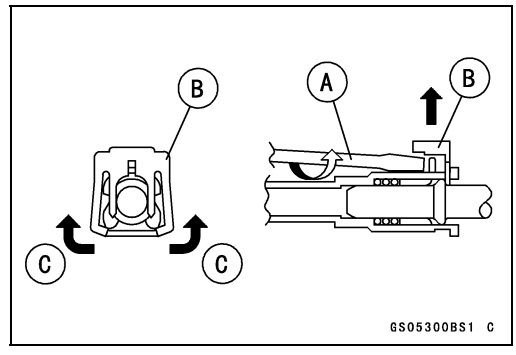

NOTICE

Prying or excessively widening the joint lock ends for fuel hose removal will permanently deform the joint lock, resulting in a loose or incomplete lock that may allow fuel to leak and create the potential for a fire explosion. To prevent fire or explosion from a damaged joint lock, do not pry or excessively widen the joint lock ends when removing the fuel hose. The joint lock has a retaining edge that locks around the housing.

Fuel Tank

● Pull [A] the fuel hose joint [B] out of the outlet pipe.

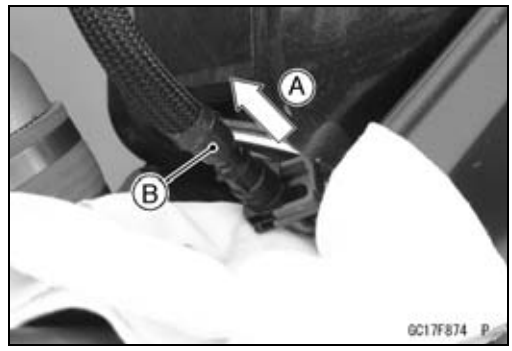

⚠ WARNING

Fuel is flammable and explosive under certain conditions and can cause severe burns. Be prepared for fuel spillage; any spilled fuel must be completely wiped up immediately. When the fuel hose is disconnected, fuel spills out from the hose and the pipe because of residual pressure. Cover the hose connection with a piece of clean cloth to prevent fuel spillage.

● Close the fuel tank cap.
● Remove the fuel tank, and place it on a flat surface.
○Do not apply the load to the fuel pipe of the fuel pump.
● Clean the pipe [A].
● Cover the pipe and the hose joint [B] with the vinyl bags [C] to keep it clean.

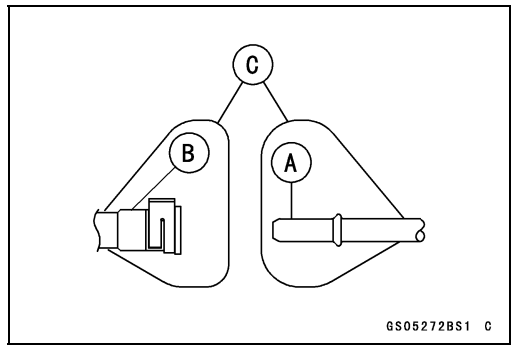

Fuel Tank Installation

● Note the above WARNING (see Fuel Tank Removal).
● Check that the dampers [A], trims [B] and pads [C] are in place on the frame and the fuel tank.
★If the dampers and trim are damaged or deteriorated, replace them.
Front [D]
Viewed from P [E]
Viewed from Q [F]
Viewed from R [G]
Viewed from S [H]
Bracket [I]

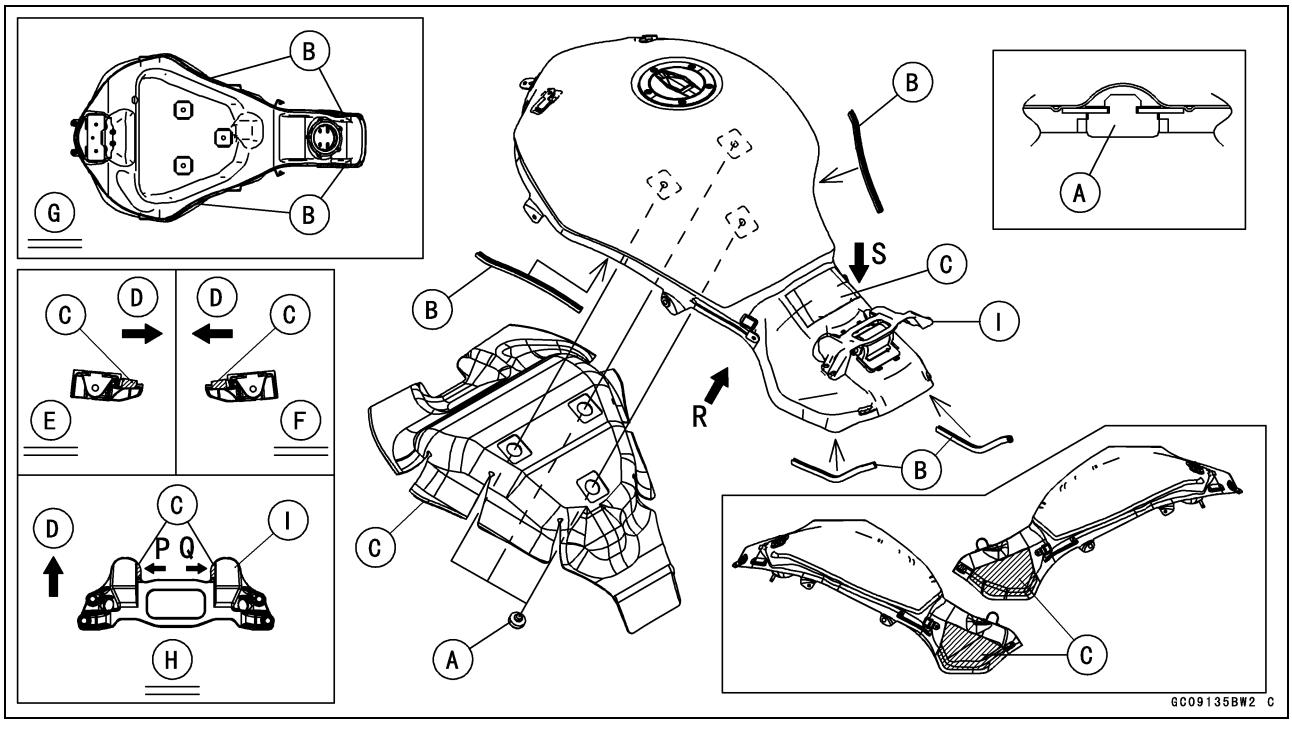

Fuel Tank

- Remove the vinyl bag on the pipe and fuel hose joint.
- Check the joint lock for deformation and wear.

★If the joint lock is deformed, replace the fuel hose with a new one.

- Check that there are no flaws, burrs, and adhesion of foreign materials on the pipe [A].
- Apply engine oil to the pipe.

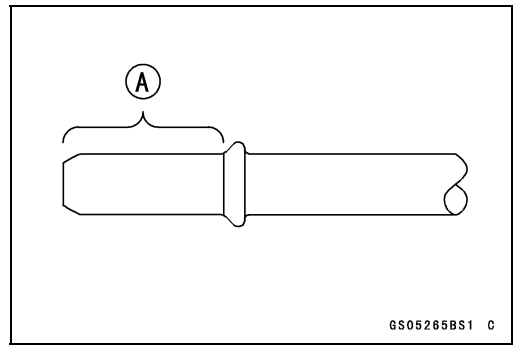

- Insert the fuel hose joint [A] straight onto the fuel outlet pipe until the hose joint clicks.
- Push [B] the joint lock [C] until the hose joint clicks.

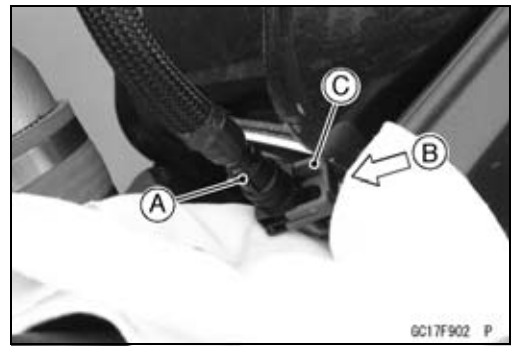

- Push and pull [A] the hose joint [B] back and forth more than two times, and make sure it is locked and does not come off.

⚠ WARNING

Leaking fuel can cause a fire or explosion resulting in serious burns. Make sure the hose joint is installed correctly on the delivery pipe.

★If it comes off, reinstall the hose joint.

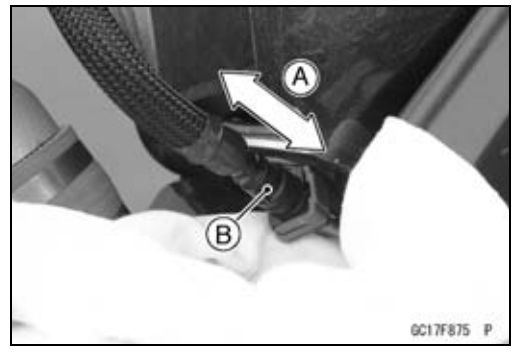

- Connect the breather hose [A] and the drain hose [B] so that the clamps [C] face rearward.
- Connect the fuel pump lead connector and the battery (–) terminal (see Battery Installation in the Electrical System chapter).

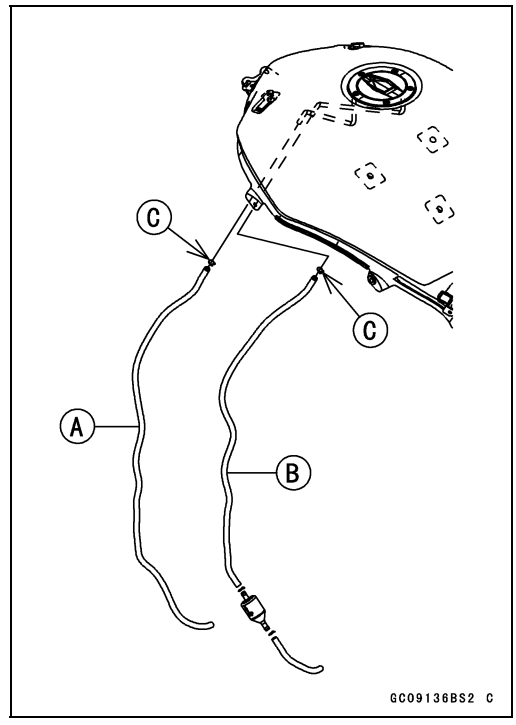

Fuel Tank

- Tighten the fuel tank bolts [A] ~ [D] following specified tightening sequence.

Tightening Sequence:

[A → B → C → D → A → B]

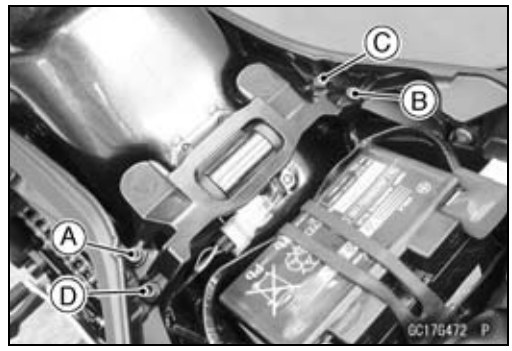

- Install the removed parts (see appropriate chapters).

Fuel Tank and Cap Inspection

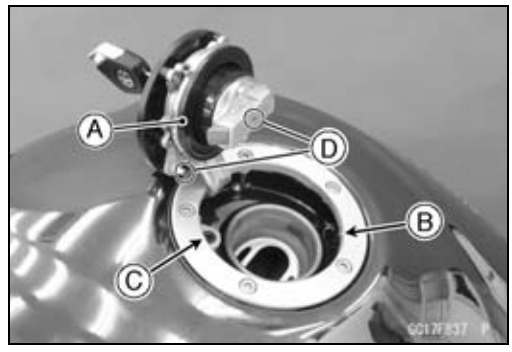

- Open the tank cap.
- Visually inspect the gasket [A] on the tank cap for any damage.

★Replace the tank cap if gasket is damaged.

- Check to see if the water drain pipe [B] and fuel breather pipe [C] in the tank are not clogged. Check the tank cap breather also.

★If they are clogged, remove the tank and drain it, and then blow the breather free with compressed air.

NOTICE
Do not apply compressed air to the air vent holes [D] in the tank cap. This could cause damage and clogging of the labyrinth in the cap.

Fuel Tank Cleaning

⚠ WARNING
Gasoline and low flash-point solvents can be flammable and/or explosive and cause severe burns. Clean the tank in a well-ventilated area, and take care that there are no sparks or flame anywhere near the working area. Do not use gasoline or low flash-point solvents to clean the tank.

- Remove:
  Fuel Tank (see Fuel Tank Removal)
  Fuel Pump (see Fuel Pump Removal)
- Pour some high flash-point solvent into the fuel tank and shake the tank to remove dirt and fuel deposits.
- Draw the solvent out of the fuel tank.
- Dry the tank with compressed air.
- Install:
  Fuel Pump (see Fuel Pump Installation)
  Fuel Tank (see Fuel Tank Installation)

Evaporative Emission Control System (Other than US, CA Models)

The Evaporative Emission Control System routes fuel vapors from the fuel system into the running engine or stores the vapors in a canister when the engine is stopped. Although no adjustments are required, a thorough visual inspection must be made at the intervals specified by the Periodic Maintenance Chart.

Parts Removal/Installation

⚠ WARNING

Gasoline is extremely flammable and can be explosive under certain conditions. Turn the ignition switch off. Do not smoke. Make sure the area is well ventilated and free from any source of flame or sparks; this includes any appliance with a pilot light.

NOTICE

If gasoline, solvent, water or any other liquid enters the canister, the canister's vapor absorbing capacity is greatly reduced. If the canister does become contaminated, replace it with a new one.

- Connect the hoses according to the diagram of the system (see Cable, Wire, and Hose Routing section in the Appendix chapter). Make sure they do not get pinched or kinked.

Hose Inspection

- Refer to the Evaporative Emission Control System Inspection (Other than US, CA Models) in the Periodic Maintenance chapter.

Purge Valve Inspection

- Refer to the Purge Valve Inspection in the Self-Diagnosis System chapter.

Canister Inspection

- Refer to the Evaporative Emission Control System Inspection (Other than US, CA Models) in the Periodic Maintenance chapter.

Cooling System

Table of Contents

Exploded View 4-2
Coolant Flow Chart 4-4
Specifications 4-7
Special Tools 4-8
Coolant 4-9
  Coolant Deterioration Inspection 4-9
  Coolant Level Inspection 4-9
  Coolant Draining 4-9
  Coolant Filling 4-9
  Pressure Testing 4-9
  Cooling System Flushing 4-10
  Coolant Reserve Tank Removal/Installation 4-10
Water Pump 4-11
  Water Pump Removal 4-11
  Water Pump Installation 4-12
  Water Pump Inspection 4-13
  Water Pump Impeller Disassembly/Assembly 4-13
  Water Pump Impeller Inspection 4-13
  Water Pump Housing Disassembly 4-14
  Water Pump Housing Assembly 4-14
  Mechanical Seal Inspection 4-14
Radiator 4-15
  Radiator and Radiator Fan Removal 4-15
  Radiator and Radiator Fan Installation 4-16
  Radiator Inspection 4-18
  Radiator Cap Inspection 4-18
  Radiator Filler Neck Inspection 4-19
Thermostat 4-20
  Thermostat Removal 4-20
  Thermostat Installation 4-20
  Thermostat Inspection 4-21
Hose and Pipes 4-22
  Hose Installation 4-22
  Hose Inspection 4-22
Water Temperature Sensor 4-23
  Water Temperature Sensor Removal/Installation 4-23
  Water Temperature Sensor Inspection 4-23

Exploded View

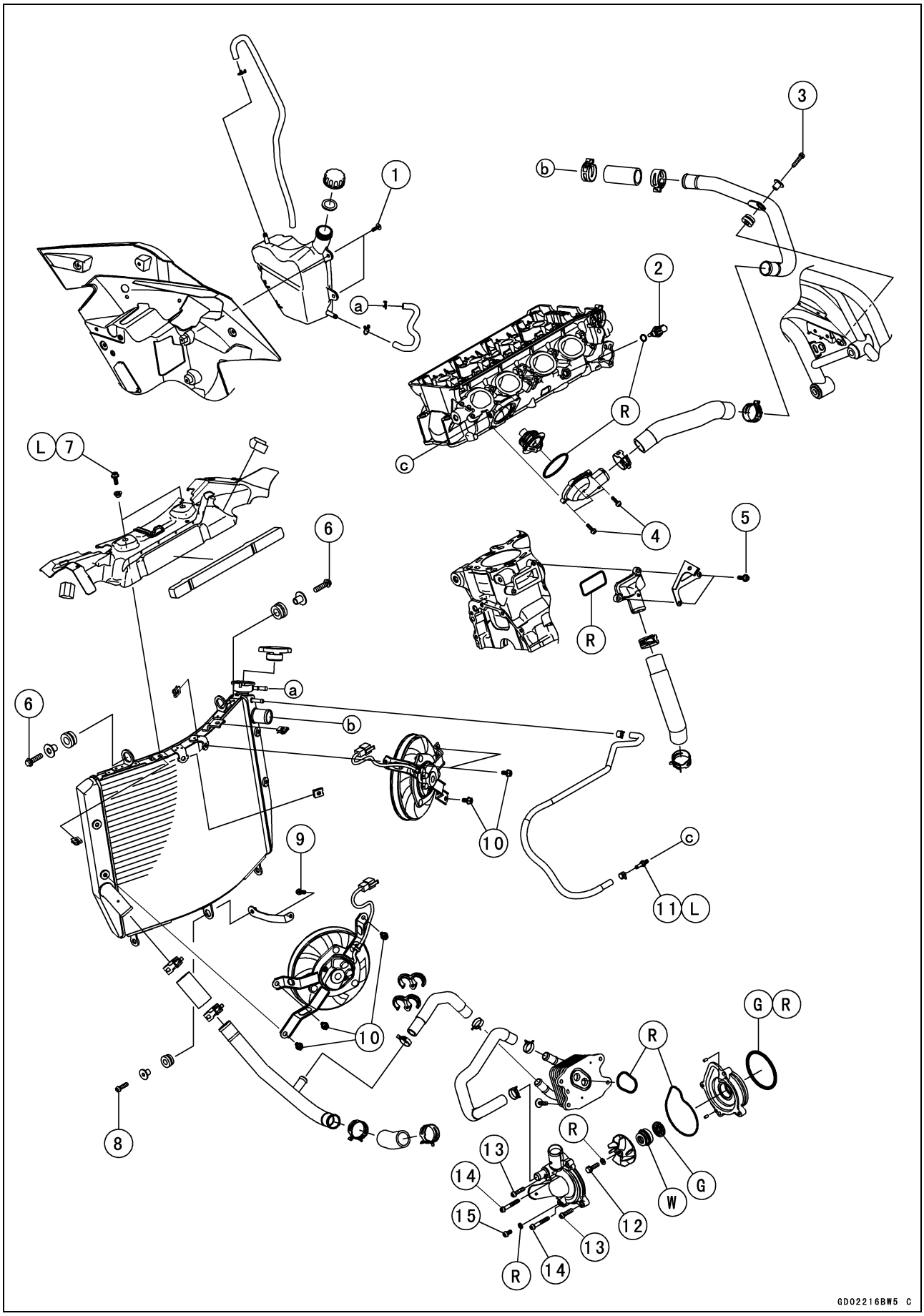

Exploded View

No.	Fastener	Torque			Remarks
		N·m	kgf·m	ft·lb	
1	Coolant Reserve Tank Screws	1.2	0.12	11 in·lb	
2	Water Temperature Sensor	12	1.2	106 in·lb	
3	Water Pipe Bolt	10	1.0	89 in·lb	
4	Thermostat Housing Bolts	6.0	0.61	53 in·lb	
5	Water Hose Fitting Cover Bolts	10	1.0	89 in·lb	
6	Upper Radiator Mounting Bolts	15	1.5	11	
7	Radiator Cover Bolts	10	1.0	89 in·lb	L
8	Lower Radiator Mounting Bolt	10	1.0	89 in·lb	
9	Radiator Stay Bolt	10	1.0	89 in·lb	
10	Radiator Fan Bolts	8.4	0.86	74 in·lb	
11	Water Hose Fitting	10	1.0	89 in·lb	L
12	Water Pump Impeller Bolt	10	1.0	89 in·lb	
13	Water Pump Cover Bolts (L = 25 mm)	10	1.0	89 in·lb	
14	Water Pump Cover Bolts (L = 40 mm)	10	1.0	89 in·lb	
15	Coolant Drain Bolt	10	1.0	89 in·lb	

G: Apply grease.
L: Apply a non-permanent locking agent.
R: Replacement Parts
W: Apply water.

Coolant Flow Chart

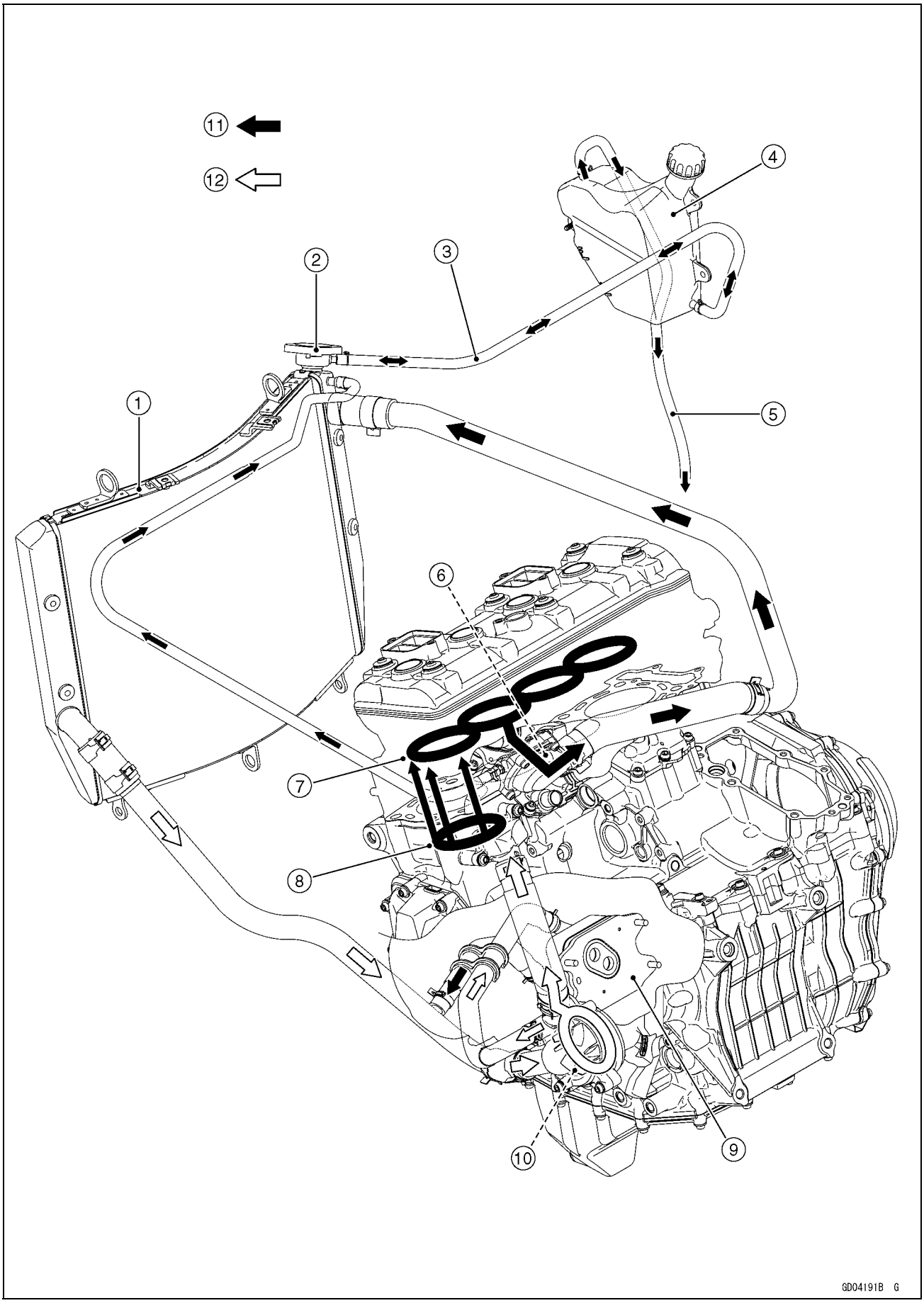

Coolant Flow Chart

1. Radiator
2. Radiator Cap
3. Radiator Overflow Hose
4. Reserve Tank
5. Reserve Tank Overflow Hose
6. Thermostat
7. Cylinder Head Water Jacket
8. Cylinder Water Jacket
9. Oil Cooler
10. Water Pump
11. Hot Coolant
12. Cold Coolant

Coolant Flow Chart

Permanent type antifreeze is used as a coolant to protect the cooling system from rust and corrosion. When the engine starts, the water pump turns and the coolant circulates.

The thermostat is a wax pellet type which opens or closes with coolant temperature changes. The thermostat continuously changes its valve opening to keep the coolant temperature at the proper level. When coolant temperature is less than 55°C (131°F), the thermostat closes so that the coolant flow is restricted through the air bleeder hole, causing the engine to warm up more quickly. When coolant temperature is more than 58 ~ 62°C (136 ~ 144°F), the thermostat opens and the coolant flows.

When the coolant temperature goes up beyond 100°C (212°F), the radiator fan relay conducts to operate the radiator fan. The radiator fan draws air through the radiator core when there is not sufficient air flow such as at low speeds. This increases up the cooling action of the radiator. When the coolant temperature is below 97.5°C (208°F), the fan relay opens and the radiator fan stops.

In this way, this system controls the engine temperature within narrow limits where the engine operates most efficiently even if the engine load varies.

The system is pressurized by the radiator cap to suppress boiling and the resultant air bubbles which can cause engine overheating. As the engine warms up, the coolant in the radiator and the water jacket expands. The excess coolant flows through the radiator cap and hose to the reserve tank to be stored there temporarily. Conversely, as the engine cools down, the coolant in the radiator and the water jacket contracts, and the stored coolant flows back to the radiator from the reserve tank.

The radiator cap has two valves. One is a pressure valve which holds the pressure in the system when the engine is running. When the pressure exceeds 107.9 ~ 137.3 kPa (1.10 ~ 1.40 kgf/cm², 15.6 ~ 19.9 psi), the pressure valve opens and releases the pressure to the reserve tank. As soon as pressure escapes, the valve closes, and keeps the pressure at 107.9 ~ 137.3 kPa (1.10 ~ 1.40 kgf/cm², 15.6 ~ 19.9 psi). When the engine cools down, another small valve (vacuum valve) in the cap opens. As the coolant cools, the coolant contracts to form a vacuum in the system. The vacuum valve opens and allows the coolant from the reserve tank to enter the radiator.

Specifications

Item	Standard
Coolant Provided when Shipping	
Type (Recommended)	Permanent type of antifreeze (soft water and ethylene glycol plus corrosion and rust inhibitor chemicals for aluminum engines and radiators)
Color	Green
Mixed Ratio	Soft water 50%, coolant 50%
Freezing Point	−35°C (−31°F)
Total Amount	2.5 L (2.6 US qt) (Reserve tank full level, including radiator and engine)
Radiator Cap	
Relief Pressure	107.9 ~ 137.3 kPa (1.10 ~ 1.40 kgf/cm², 15.6 ~ 19.9 psi)
Thermostat	
Valve Opening Temperature	58 ~ 62°C (136 ~ 144°F)
Valve Full Opening Lift	8 mm (0.31 in.) or more @75°C (167°F)

Special Tools

Bearing Driver Set:
57001-1129

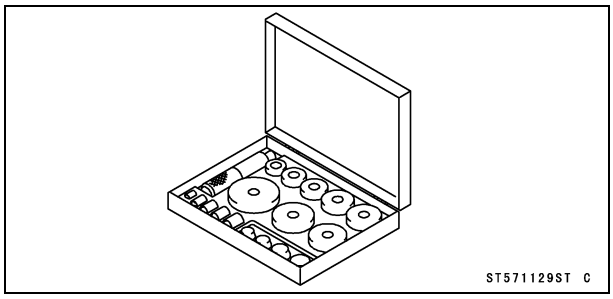

Oil Seal Driver ϕ37.5:
57001-1660

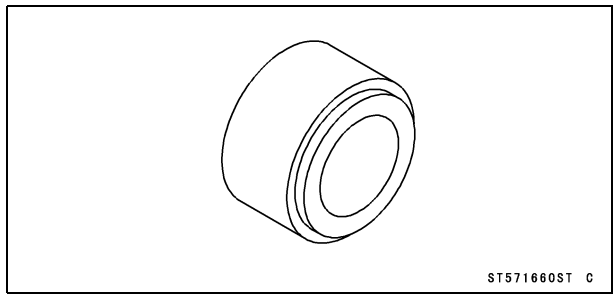

Coolant

Coolant Deterioration Inspection

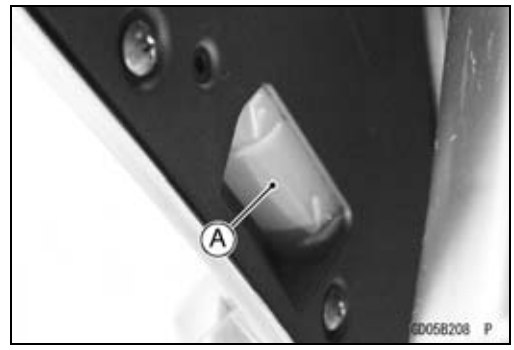

- Visually inspect the coolant in the reserve tank [A].

★If whitish cotton-like wafts are observed, aluminum parts in the cooling system are corroded. If the coolant is brown, iron or steel parts are rusting. In either case, flush the cooling system.

★If the coolant gives off an abnormal smell, check for a cooling system leak. It may be caused by exhaust gas leaking into the cooling system.

Coolant Level Inspection

- Refer to the Coolant Level Inspection in the Periodic Maintenance chapter.

Coolant Draining

- Refer to the Coolant Change in the Periodic Maintenance chapter.

Coolant Filling

- Refer to the Coolant Change in the Periodic Maintenance chapter.

Pressure Testing



- Inspect the radiator filler neck (see Radiator Filler Neck Inspection).
- Install a cooling system pressure tester [A] on the filler neck.

NOTE

○*Wet the cap sealing surfaces with water or coolant to prevent pressure leaks.*

- Build up pressure in the system carefully until the pressure reaches 137.3 kPa (1.40 kgf/cm², 19.9 psi).

NOTICE

During pressure testing, do not exceed the pressure for which the system is designed. The maximum pressure is 137.3 kPa (1.40 kgf/cm², 19.9 psi).

- Watch the gauge for at least 6 seconds.

★If the pressure holds steady, the system is all right.

★If the pressure drops and no external source is found, check for internal leaks. Droplets in the engine oil indicate internal leakage. Check the cylinder head gasket and the water pump.

- Remove the pressure tester, replenish the coolant, and install the radiator cap.
- Install the right middle fairing (see Middle Fairing Installation in the Frame chapter).

Coolant

Cooling System Flushing

Over a period of time, the cooling system accumulates rust, scale, and lime in the water jacket and radiator. When this accumulation is suspected or observed, flush the cooling system. If this accumulation is not removed, it will clog up the coolant passage and considerable reduce the efficiency of the cooling system.

- Drain the cooling system (see Coolant Change in the Periodic Maintenance chapter).
- Fill the cooling system with fresh water mixed with a flushing compound.

NOTICE
Do not use a flushing compound which is harmful to the aluminum engine and radiator. Carefully follow the instructions supplied by the manufacturer of the cleaning product.

- Warm up the engine, and run it at normal operating temperature for about ten minutes.
- Stop the engine, and drain the cooling system after cooling the engine.
- Fill the system with fresh water.
- Warm up the engine, and drain the cooling system after cooling the engine.
- Repeat the previous two steps once more.
- Fill the system with a permanent type coolant and bleed the air from the system (see Coolant Change in the Periodic Maintenance chapter).

Coolant Reserve Tank Removal/Installation

- Refer to the Middle Fairing Disassembly/Assembly in the Frame chapter.

Water Pump

Water Pump Removal

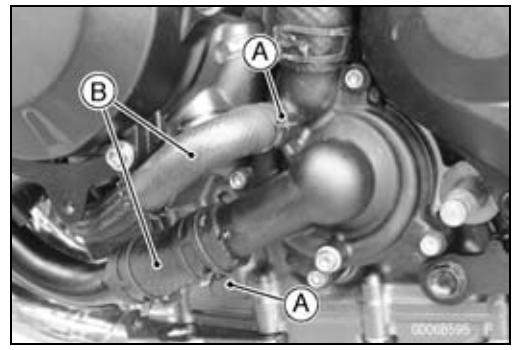

- Situate the motorcycle so that it is perpendicular to the ground to prevent from dropping out the oil pump parts.
- Drain:
  Coolant (see Coolant Change in the Periodic Maintenance chapter)
  Engine Oil (see Engine Oil Change in the Periodic Maintenance chapter)
- Remove:
  Left Lower Fairing (see Lower Fairing Removal in the Frame chapter)
  Shift Lever (see Shift Pedal Removal in the Crankshaft/Transmission chapter)
- Slide the clamps [A], and disconnect the water hoses [B].

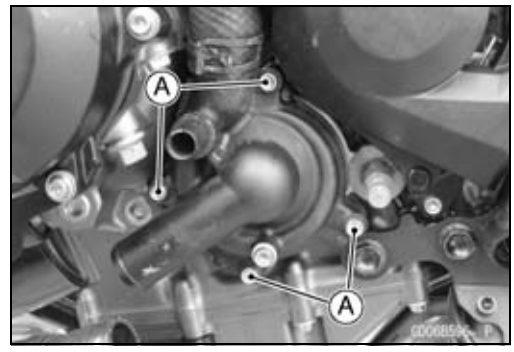

- Remove the water pump cover bolts [A].

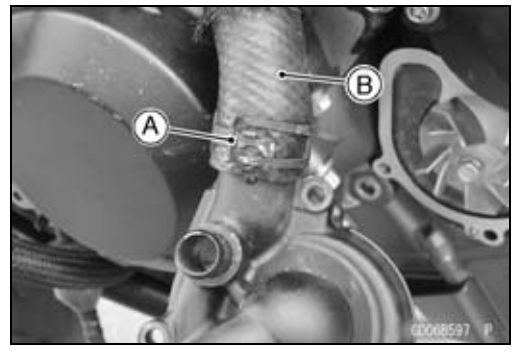

- Slide the clamp [A], and disconnect the water hose [B].

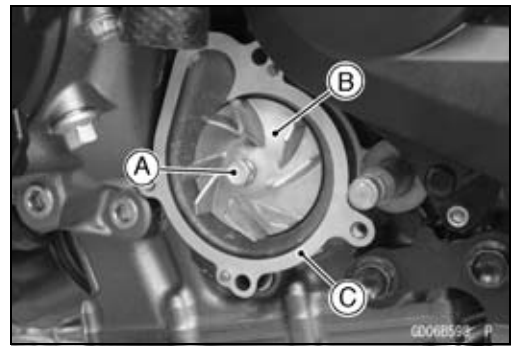

- Remove:
  Water Pump Impeller Bolt [A] and Washer
  Water Pump Impeller [B]
  Water Pump Housing [C]

Water Pump

Water Pump Installation

- Check that the oil pump is installed correctly.
- Replace the O-ring [A] with a new one.
- Apply grease to the O-ring, and install it.



- Install:
  Water Pump Housing [A]
  Water Pump Impeller [B]
- Replace the washer with a new one, and install it.
- Tighten:

Torque - Water Pump Impeller Bolt [C]: 10 N·m (1.0 kgf·m, 89 in·lb)

- Be sure to install the dowel pins [D].

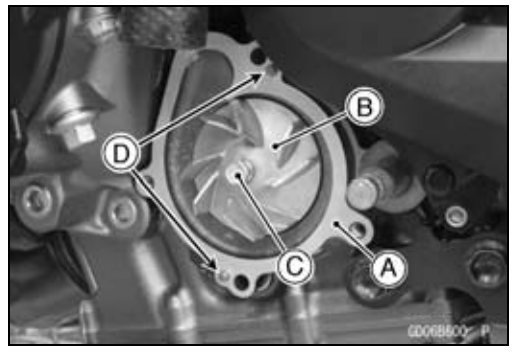

- Replace the O-ring [A] with a new one, and install it.

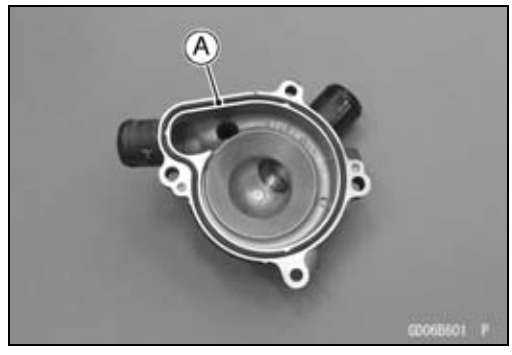

- Install the water hose [A] and clamp [B] to the water pump cover [C] (see Cable, Wire, and Hose Routing section in the Appendix chapter).

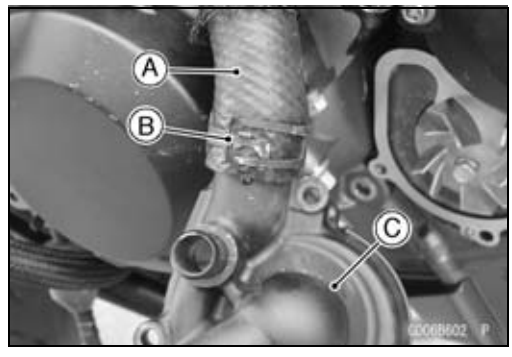

- Install:
  Water Pump Cover [A]
  Water Pump Cover Bolts (L = 25 mm) [B]
  Water Pump Cover Bolts (L = 40 mm) [C]
- Tighten:

Torque - Water Pump Cover Bolts: 10 N·m (1.0 kgf·m, 89 in·lb)

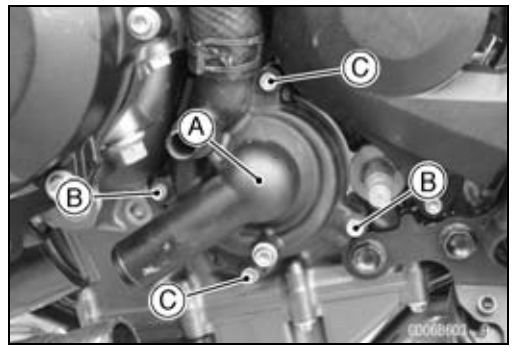

Water Pump

- Install the water hoses [A] and clamps [B] (see Cable, Wire, and Hose Routing section in the Appendix chapter).
- Install the removed parts (see appropriate chapters).

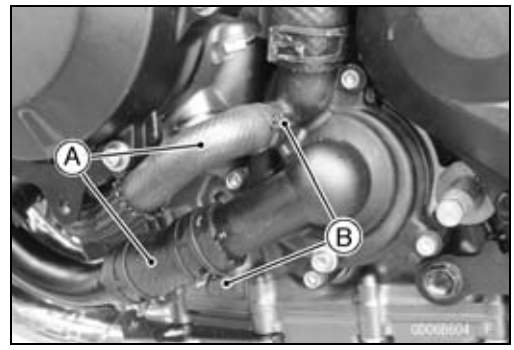

Water Pump Inspection

- Check the drainage outlet passage [A] at the bottom of the water pump housing for coolant leaks.
- If a coolant leak or ooze is found, start the engine and check if the coolant leaks continuously.

○When coolant does not continuously leak, it is normal.

★If the mechanical seal is damaged, the coolant continuously leaks through the drainage outlet passage. Replace the mechanical seal unit.

★If the oil seal is damaged, engine oil leaks through the drainage outlet passage. Replace the oil seal.

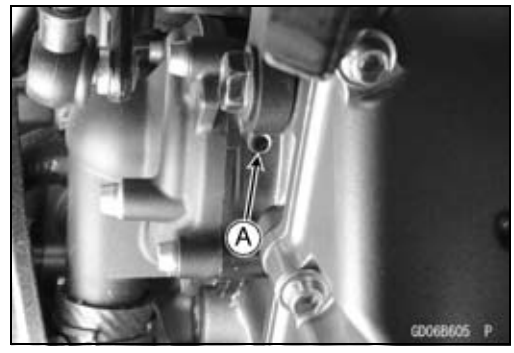

Water Pump Impeller Disassembly/Assembly

- Remove the water pump impeller (see Water Pump Removal).
- The sealing seat [A] and rubber seal [B] may be removed easily by hand.
- Apply water or coolant around the surfaces of the rubber seal and sealing seat.
- Install the rubber seal and sealing seat into the impeller by pressing them by hand until the seat stops at the bottom of the hole.
- Install the water pump impeller (see Water Pump Installation).

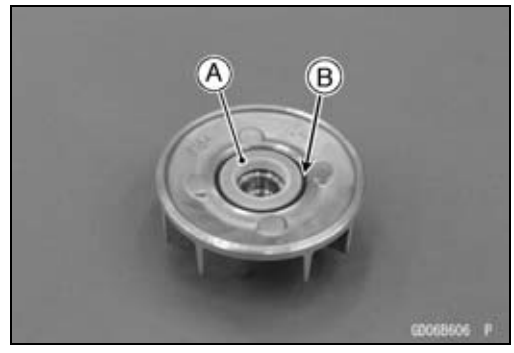

Water Pump Impeller Inspection

- Remove the water pump cover (see Water Pump Removal).
- Visually inspect the water pump impeller [A].

★If the surface is corroded or if the blades are damaged, replace the water pump impeller.

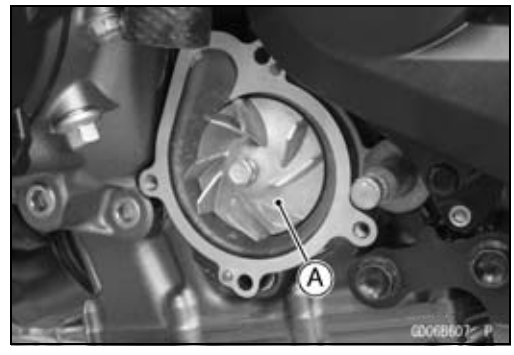

Water Pump

Water Pump Housing Disassembly

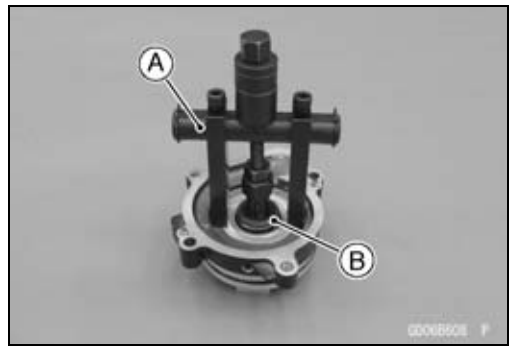

- Remove the water pump housing (see Water Pump Removal).
- Using suitable tool [A], remove the mechanical seal [B] and oil seal from the water pump body.

Water Pump Housing Assembly

NOTICE
Do not reuse the mechanical seal and oil seal.

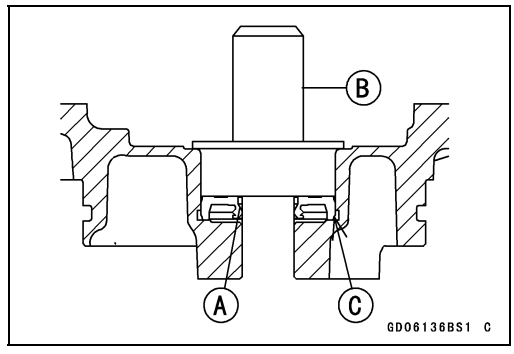

- Apply grease to the oil seal lips [A].
- Press the new oil seal into the housing with a bearing driver [B] until it stops at the bottom surface [C] of the housing.

Special Tool - Bearing Driver Set: 57001-1129

NOTICE
Be careful not to damage the sealing surface of the mechanical seal.

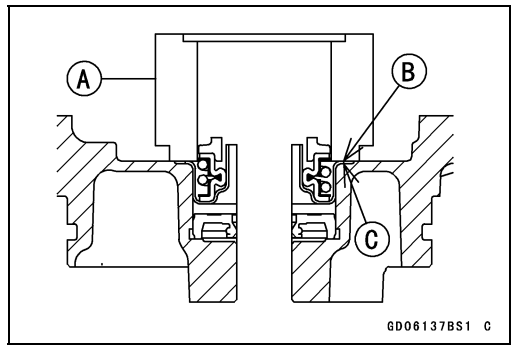

- Press the new mechanical seal into the housing with the oil seal driver [A] until its flange [B] touches the surface [C] of the housing.

Special Tool - Oil Seal Driver ϕ37.5: 57001-1660

Mechanical Seal Inspection

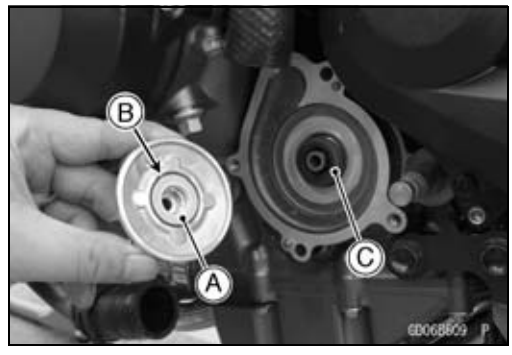

- Remove the water pump impeller (see Water Pump Removal).
- Visually inspect the mechanical seal.

★If any one of the parts is damaged, replace the mechanical seal as a unit.

Impeller Sealing Seat Surface [A]
Rubber Seal [B]
Mechanical Seal [C]

Radiator

Radiator and Radiator Fan Removal

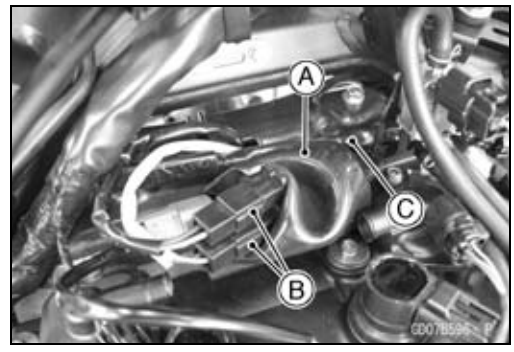

- Drain the coolant (see Coolant Change in the Periodic Maintenance chapter).
- Remove:
  Right Middle Fairing (see Middle Fairing Removal in the Frame chapter)
  Rear Intake Duct (see Intake Duct Removal in the Frame chapter)
  Air Switching Valve (see Air Switching Valve Removal in the Engine Top End chapter)
- Slide the dust cover [A], and disconnect the radiator fan motor lead connectors [B].
- Remove the clamp [C].

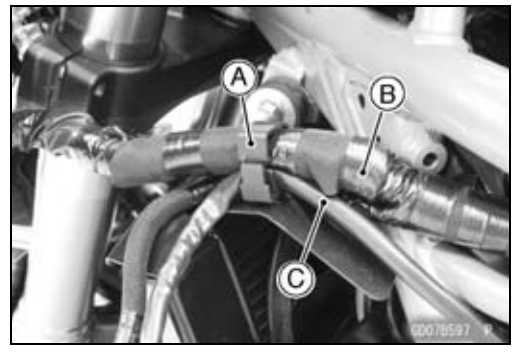

- Open the clamp [A], and clear the main harness [B] and regulator/rectifier lead (to alternator) [C].

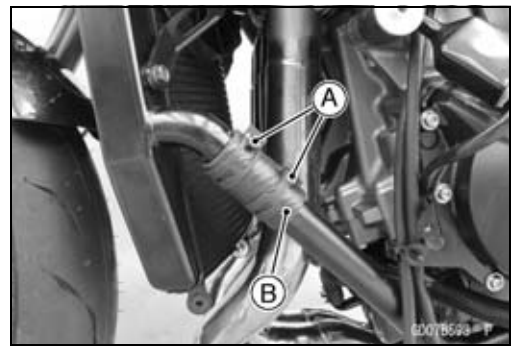

- Slide the clamps [A], and disconnect the water hose [B].

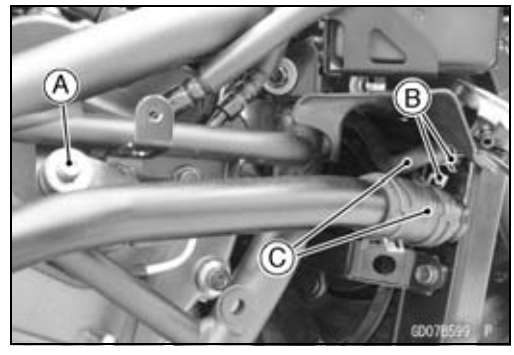

- Remove the water pipe bolt [A].
- Slide the clamps [B], and disconnect the water hoses [C].

Radiator

● Remove the lower radiator mounting bolt [A].



● Remove the upper radiator mounting bolt [A] (both sides), and remove the radiator [B].

NOTICE
Do not touch the radiator core. This could damage the radiator fins, resulting in loss of cooling efficiency.

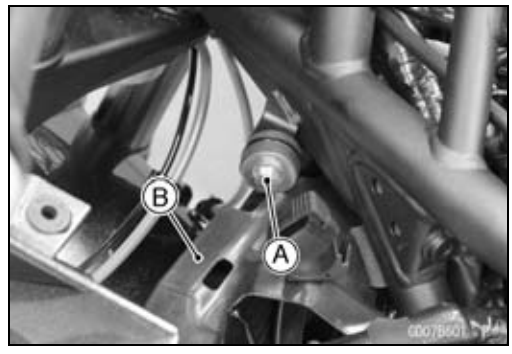

● Remove:
Radiator Cover Bolts [A]
Collars
Radiator Cover [B]

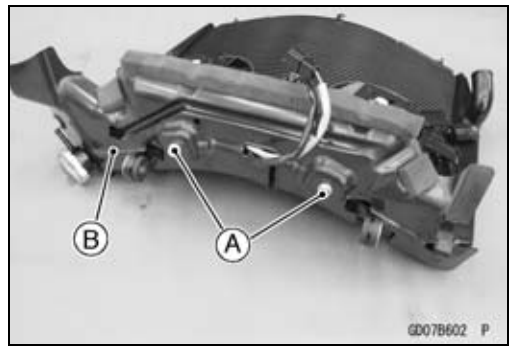

● Remove:
Radiator Fan Bolts [A]
Left Radiator Fan [B]
Right Radiator Fan [C]

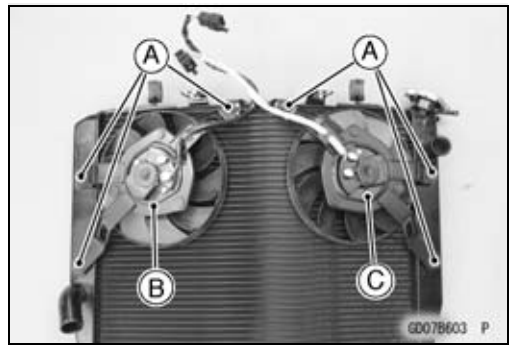

Radiator and Radiator Fan Installation

● Installation is the reverse of removal.
● Tighten the radiator fan bolts.

Torque - Radiator Fan Bolts: 8.4 N·m (0.86 kgf·m, 74 in·lb)

Radiator

- Install the rubber dampers [A], [B] and collars [C] as shown.

○Make sure that the dampers have been fitted in the brackets [D].

○Face the large diameter side of the damper to the collar.

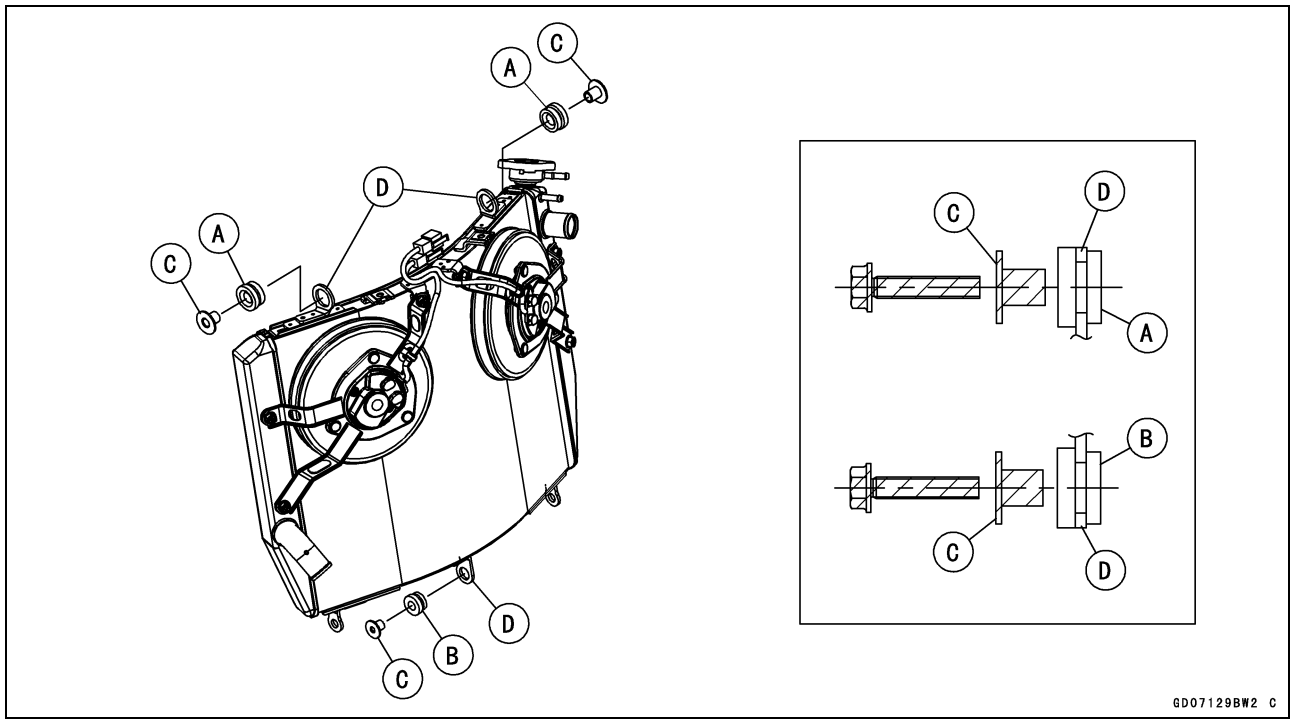

- Check that the pads [A] are in place on the radiator cover [B].

  3 mm (0.12 in.) [C]

★If the pads are damage or deteriorated, replace them.

- Apply a non-permanent locking agent to the threads of the radiator cover bolts.
- Install the collars and tighten the radiator cover bolts.

Torque - Radiator Cover Bolts: 10 N·m (1.0 kgf·m, 89 in·lb)

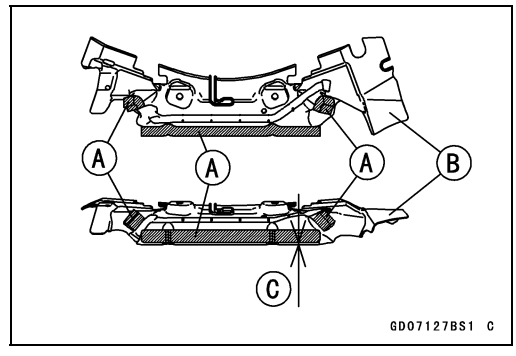

- Tighten the upper and lower radiator mounting bolts.

Torque - Upper Radiator Mounting Bolts: 15 N·m (1.5 kgf·m, 11 ft·lb)

Lower Radiator Mounting Bolt: 10 N·m (1.0 kgf·m, 89 in·lb)

- Run the radiator fan motor leads, main harness and regulator/rectifier lead (to alternator) correctly (see Cable, Wire, and Hose Routing section in the Appendix chapter).
- Install the water hoses and clamps (see Cable, Wire, and Hose Routing section in the Appendix chapter).
- Tighten the water pipe bolt.

Torque - Water Pipe Bolt: 10 N·m (1.0 kgf·m, 89 in·lb)

- Install the removed parts (see appropriate chapters).

Radiator

Radiator Inspection

- Remove the radiator (see Radiator and Radiator Fan Removal).
- Check the radiator core.

★If there are obstructions to air flow, remove them.

★If the corrugated fins [A] are deformed, carefully straighten them.

★If the air passages of the radiator core are blocked more than 20% by unremovable obstructions or irreparably deformed fins, replace the radiator with a new one.

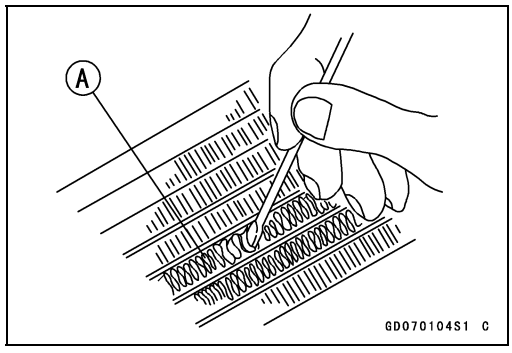

NOTICE

When cleaning the radiator with steam cleaner, be careful of the following to prevent radiator damage:
Keep the steam gun [A] away more than 0.5 m (1.6 ft) [B] from the radiator core.
Hold the steam gun perpendicular [C] (not oblique [D]) to the core surface.
Run the steam gun, following the core fin direction.

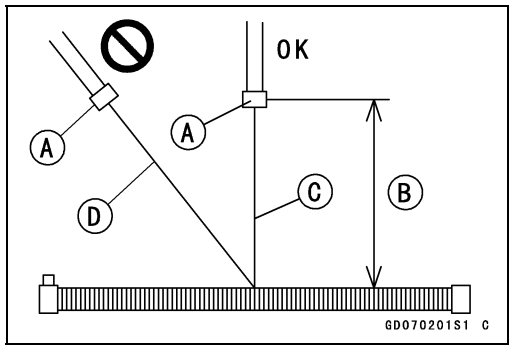

Radiator Cap Inspection

- Remove:
  Right Middle Fairing (see Middle Fairing Removal in the Frame chapter)
  Radiator Cap
- Check the condition of the bottom [A] and top [B] valve seals and valve spring [C].

★If any one of them shows visible damage, replace the cap with a new one.

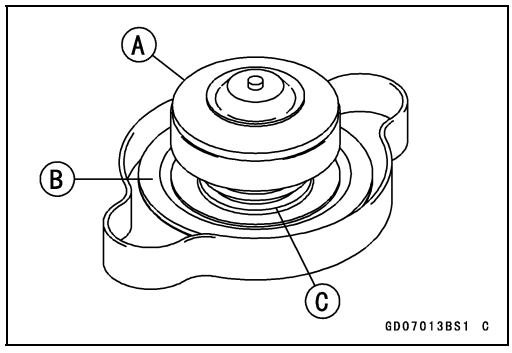

- Install the cap [A] on a cooling system pressure tester [B].

NOTE

○*Wet the cap sealing surfaces with water or coolant to prevent pressure leaks.*

- Watching the pressure gauge, pump the pressure tester to build up the pressure until the relief valve opens: the gauge needle flicks downward. Stop pumping and measure leak time at once. The relief valve must open within the specified range in the table below and the gauge hand must remain within the same range at least 6 seconds.

Radiator Cap Relief Pressure
Standard: 107.9 ~ 137.3 kPa (1.10 ~ 1.40 kgf/cm², 15.6 ~ 19.9 psi)

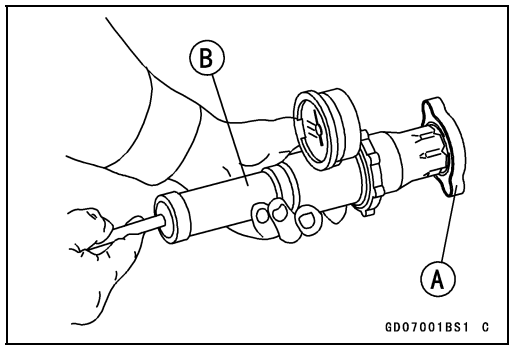

★If the cap can not hold the specified pressure or if it holds too much pressure, replace it with a new one.

Radiator

Radiator Filler Neck Inspection

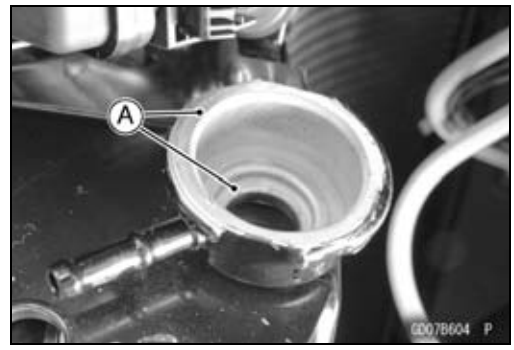

- Remove:
  Right Middle Fairing (see Middle Fairing Removal in the Frame chapter)
  Radiator Cap
- Check the radiator filler neck for signs of damage.
- Check the condition of the top and bottom sealing seats [A] in the filler neck. They must be smooth and clean for the radiator cap to function properly.

Thermostat

Thermostat Removal

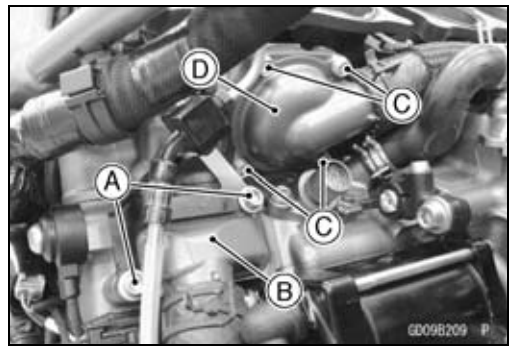

- Drain:
  Coolant (see Coolant Change in the Periodic Maintenance chapter)
- Remove:
  Air Cleaner Housing (see Air Cleaner Housing Removal in the Fuel System (DFI) chapter)
  Water Hose Fitting Cover Bolts [A]
  Water Hose Fitting Cover [B]
  Thermostat Housing Bolts [C]
  Thermostat Housing Cover [D]

Thermostat Installation

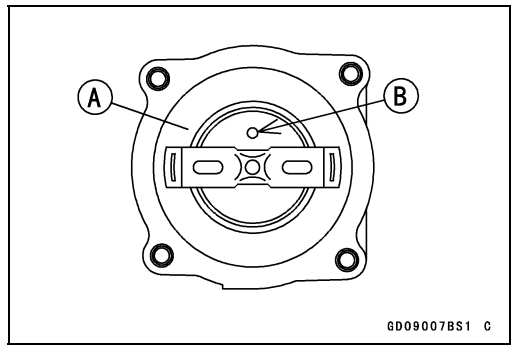

- Install the thermostat [A] in the housing so that the air bleeder hole [B] is on top.

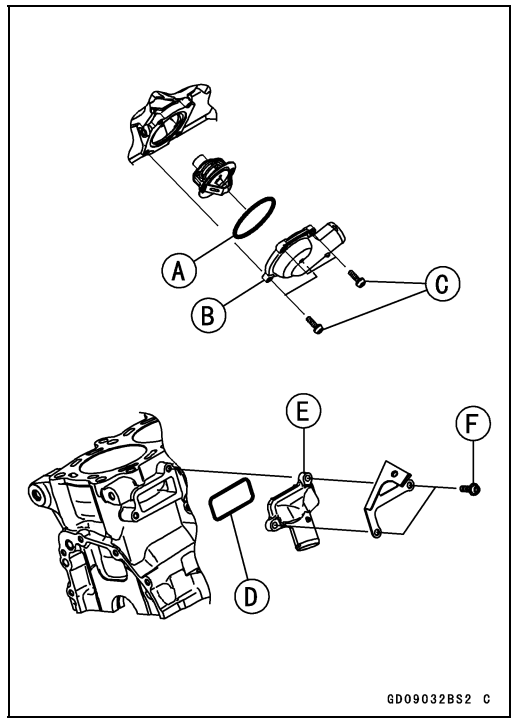

- Replace the thermostat housing cover O-ring [A] with a new one, and install it.
- Install the thermostat housing cover [B].

NOTE

○*Note that the thermostat does not move at the place when installing the thermostat housing cover.*

- Tighten:

Torque - Thermostat Housing Bolts [C]: 6.0 N·m (0.61 kgf·m, 53 in·lb)

- Run the hoses correctly (see Cable, Wire, and Hose Routing section in the Appendix chapter).
- Replace the water hose fitting cover O-ring [D] with a new one, and install it.
- Install the water hose fitting cover [E].
- Tighten:

Torque - Water Hose Fitting Cover Bolts [F]: 10 N·m (1.0 kgf·m, 89 in·lb)

- Fill the radiator with coolant (see Coolant Change in the Periodic Maintenance chapter).
- Install the removed parts (see appropriate chapters).

Thermostat

Thermostat Inspection

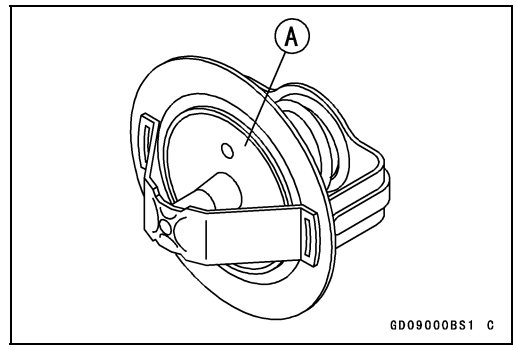

- Remove the thermostat (see Thermostat Removal).
- Inspect the thermostat valve [A] at room temperature.

★If the valve is open, replace the thermostat with a new one.

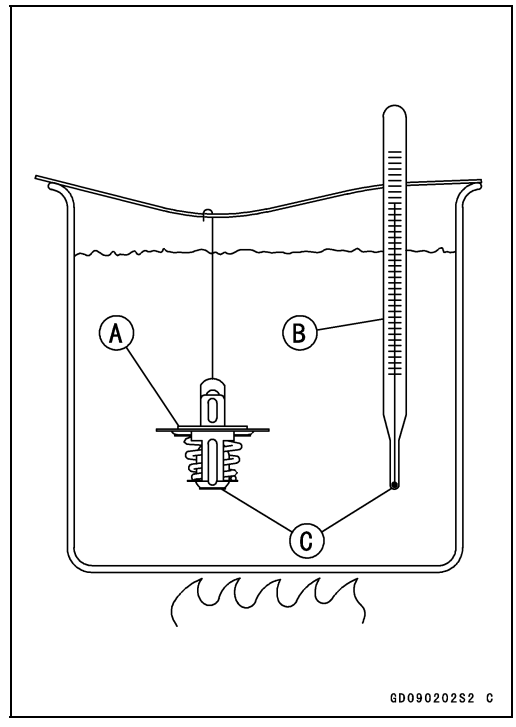

- To check valve opening temperature, suspend the thermostat [A] in a container of water and raise the temperature of the water.

○The thermostat must be completely submerged and must not touch the container sides or bottom. Suspend an accurate thermometer [B] in the water so that the heat sensitive portions [C] are located in almost the same depth. It must not touch the container, either.

★If the measurement is out of the specified range, replace the thermostat with a new one.

Thermostat Valve Opening Temperature
Standard: 58 ~ 62°C (136 ~ 144°F)

Thermostat Valve Full Opening Lift
Standard: 8 mm (0.31 in.) or more @75°C (167°F)

Hose and Pipes

Hose Installation

- Install the hoses and pipes, being careful to follow bending direction. Avoid sharp bending, kinking, flattening or twisting.
- Run the hoses (see Cable, Wire, and Hose Routing section in the Appendix chapter).
- Install the clamp [A] as near as possible to the hose end to clear the raised rib of the fitting. This will prevent the hoses from working loose.

○The clamps should be positioned correctly to prevent the clamps from contacting the other parts.

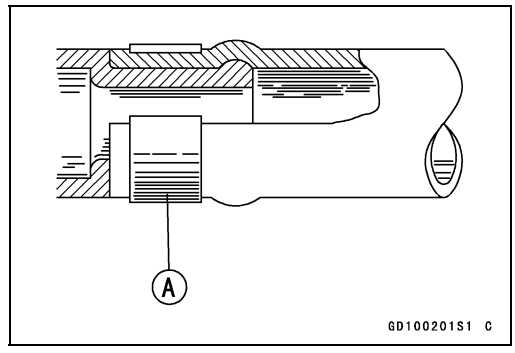

Hose Inspection

- Refer to the Water Hose and Pipe Inspection in the Periodic Maintenance chapter.

Water Temperature Sensor

NOTICE
The water temperature sensor should never be allowed to fall on a hard surface. Such a shock to the water temperature sensor can damage it.

Water Temperature Sensor Removal/Installation

- Refer to the Water Temperature Sensor Removal/Installation in the Self-Diagnosis System chapter.

Water Temperature Sensor Inspection

- Refer to the Water Temperature Sensor Inspection in the Electrical System chapter.

Engine Top End

Table of Contents

Exploded View 5-2
Exhaust System Identification 5-6
Specifications 5-8
Special Tools and Sealants 5-9
Clean Air System 5-11
  Air Suction Valve Removal 5-11
  Air Suction Valve Installation 5-11
  Air Suction Valve Inspection 5-12
  Air Switching Valve Removal 5-12
  Air Switching Valve Installation 5-13
  Air Switching Valve Operation Test 5-13
  Air Switching Valve Unit Test 5-13
  Clean Air System Hose Inspection 5-13
Cylinder Head Cover 5-14
  Cylinder Head Cover Removal 5-14
  Cylinder Head Cover Installation . 5-15
Camshaft Chain Tensioner 5-17
  Camshaft Chain Tensioner Removal 5-17
  Camshaft Chain Tensioner Installation 5-17
Camshaft, Camshaft Chain 5-19
  Camshaft Removal 5-19
  Camshaft Installation 5-20
  Camshaft, Camshaft Cap Wear Inspection 5-23
  Camshaft Runout Inspection 5-23
  Cam Wear Inspection 5-24
  Camshaft Chain Removal 5-24
  Camshaft Chain Installation 5-24
Cylinder Head 5-25
  Cylinder Compression Measurement 5-25
  Cylinder Head Removal 5-26
  Cylinder Head Installation 5-26
  Cylinder Head Warp Inspection ... 5-28
Valves 5-29
  Valve Clearance Inspection 5-29
  Valve Clearance Adjustment 5-29
  Valve Removal 5-29
  Valve Installation 5-29
  Valve Guide Removal 5-29
  Valve Guide Installation 5-30
  Valve-to-Guide Clearance Measurement (Wobble Method) 5-30
  Valve Seat Inspection 5-31
  Valve Seat Repair 5-31
Throttle Body Assy Holder 5-36
  Throttle Body Assy Holder Removal 5-36
  Throttle Body Assy Holder Installation 5-36
Muffler 5-37
  Muffler Body Removal 5-37
  Muffler Body Installation 5-38
  Exhaust Pipe Removal 5-40
  Exhaust Pipe Installation 5-43
  Exhaust Butterfly Valve Cable Removal 5-44
  Exhaust Butterfly Valve Cable Installation 5-45
  Exhaust Butterfly Valve Actuator Removal 5-48
  Exhaust Butterfly Valve Actuator Installation 5-49
  Exhaust Butterfly Valve Actuator Adjustment 5-50

Exploded View

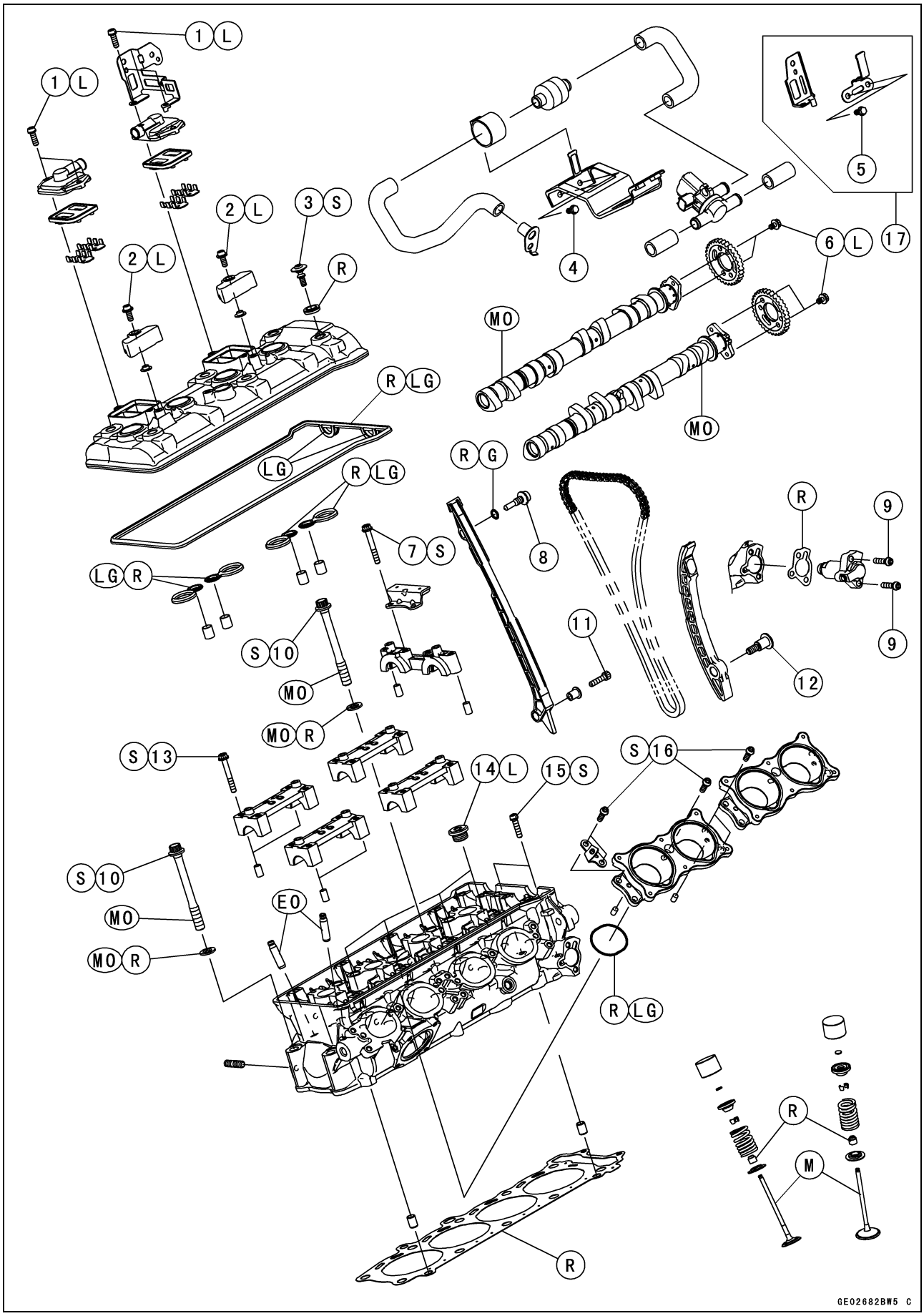

Exploded View

No.	Fastener	Torque			Remarks
		N·m	kgf·m	ft·lb	
1	Air Suction Valve Cover Bolts	10	1.0	89 in·lb	L
2	Sub Cover Bolts	10	1.0	89 in·lb	L
3	Cylinder Head Cover Bolts	10	1.0	89 in·lb	S
4	Canister Lower Bracket Bolts	9.8	1.0	87 in·lb	
5	Air Switching Valve Filter Bracket Bolts	9.8	1.0	87 in·lb	
6	Camshaft Sprocket Bolts	15	1.5	11	L
7	Upper Camshaft Chain Guide Bolts	12	1.2	106 in·lb	S
8	Front Camshaft Chain Guide Bolt (Upper)	25	2.5	18	
9	Camshaft Chain Tensioner Mounting Bolts	10	1.0	89 in·lb	
10	Cylinder Head Bolts (M10), First	30	3.1	22	MO, S
	Cylinder Head Bolts (M10), Final	67	6.8	49	MO, S
11	Front Camshaft Chain Guide Bolt (Lower)	12	1.2	106 in·lb	
12	Rear Camshaft Chain Guide Bolt	25	2.5	18	
13	Camshaft Cap Bolts	12	1.2	106 in·lb	S
14	Cylinder Head Plugs	19.6	2.00	14.5	L
15	Cylinder Head Bolts (M6)	12	1.2	106 in·lb	S
16	Throttle Body Assy Holder Bolts	10	1.0	89 in·lb	S

17. US and CA Models.
EO: Apply engine oil.
G: Apply grease.
L: Apply a non-permanent locking agent.
LG: Apply liquid gasket.
M: Apply molybdenum disulfide grease.
MO: Apply molybdenum disulfide oil solution.
(mixture of the engine oil and molybdenum disulfide grease in a weight ratio 10:1)
R: Replacement Parts
S: Follow the specified tightening sequence.

Exploded View

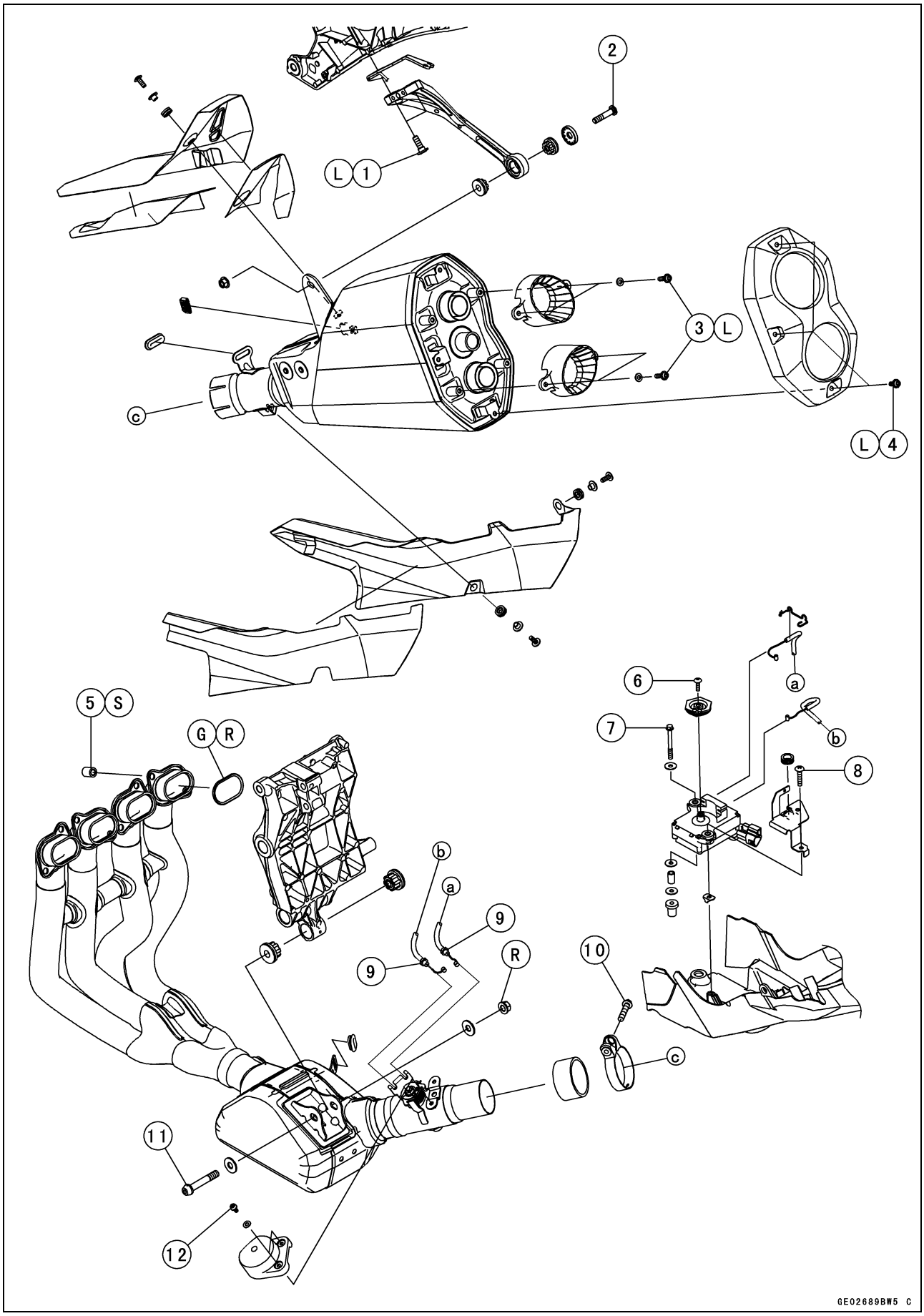

Exploded View

No.	Fastener	Torque			Remarks
		N·m	kgf·m	ft·lb	
1	Muffler Body Stay Bolt	25	2.5	18	L
2	Muffler Body Mounting Bolt	25	2.5	18	
3	Muffler Body Nozzle Bolts	10	1.0	89 in·lb	L
4	Muffler Body End Cover Bolts	10	1.0	89 in·lb	L
5	Exhaust Pipe Holder Nuts	17	1.7	13	S
6	Exhaust Butterfly Valve Actuator Pulley Bolt	5.0	0.51	44 in·lb	
7	Exhaust Butterfly Valve Actuator Mounting Bolt	1.0	0.10	8.9 in·lb	
8	Exhaust Butterfly Valve Actuator Mounting Screw	1.2	0.12	11 in·lb	
9	Exhaust Butterfly Valve Cable Locknuts	5.5	0.56	49 in·lb	
10	Muffler Body Clamp Bolt	17	1.7	13	
11	Exhaust Pipe Mounting Bolt	34	3.5	25	
12	Exhaust Butterfly Valve Cover Bolts	6.0	0.61	53 in·lb	

G: Apply grease.
L: Apply a non-permanent locking agent.
R: Replacement Parts
S. Follow the specified tightening sequence.

Exhaust System Identification

MANIFOLD	MUFFLER BODY	SPECIFICATION	MODEL
Honeycomb Type Catalyst with Oxygen Sensor P/No. 39178-0286 Mark: KHI M 183	Honeycomb Type Catalyst P/No. 18100-0584 Mark: KHI K 661	AU	ZX1000XH
		ID	ZX1000XH
		MY	ZX1000XH
		PH	ZX1000XH
		SEA-B1	ZX1000XH
		SEA-B3	ZX1000XH
		TH	ZX1000XH
		WVTA (FULL)	ZX1000XH
Honeycomb Type Catalyst with Oxygen Sensor P/No. 39178-0262 Mark: KHI M 168	Non-Catalyst P/No. 18100-0581 Mark: KHI K 642 EPA Noise Emission Control Information	CA	ZX1000XH
		CAL	ZX1000XH
		US	ZX1000XH

GE24600C F

Exhaust Pipe Mark Position [A]

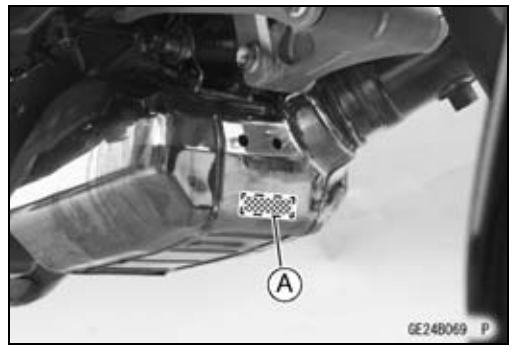

Muffler Body Mark Position [A]

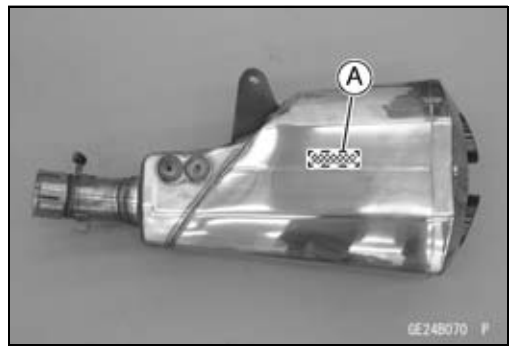

Exhaust System Identification

Exhaust Pipe [A] with Hole [B] for Oxygen Sensor [C]

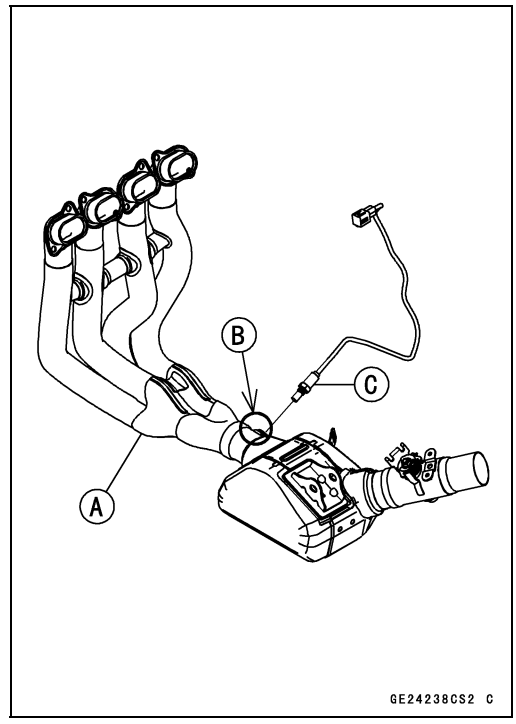

Honeycomb Type Catalyst Positions [A]

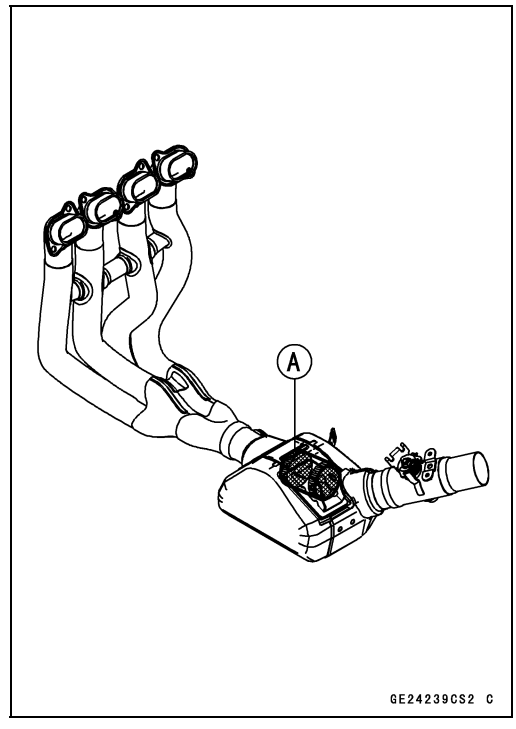

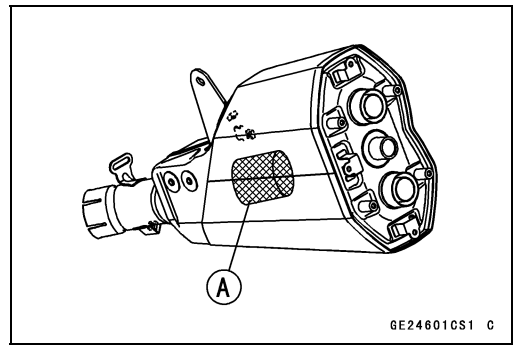

Specifications

Item	Standard	Service Limit
Camshafts		
Cam Height:		
Exhaust	33.943 ~ 34.057 mm (1.3363 ~ 1.3408 in.)	33.84 mm (1.332 in.)
Intake	33.743 ~ 33.857 mm (1.3285 ~ 1.3330 in.)	33.64 mm (1.324 in.)
Camshaft Journal/Cap Clearance	0.038 ~ 0.081 mm (0.0015 ~ 0.0032 in.)	0.17 mm (0.0067 in.)
Camshaft Journal Diameter	23.940 ~ 23.962 mm (0.94252 ~ 0.94338 in.)	23.91 mm (0.9413 in.)
Camshaft Bearing Inside Diameter	24.000 ~ 24.021 mm (0.94488 ~ 0.94571 in.)	24.08 mm (0.9480 in.)
Camshaft Runout	TIR 0.02 mm (0.0008 in.) or less	TIR 0.1 mm (0.004 in.)
Cylinder Head		
Cylinder Compression	(Usable Range) 784 ~ 1 218 kPa (8.00 ~ 12.42 kgf/cm², 114 ~ 176.6 psi) @270 r/min (rpm)	– – –
Cylinder Head Warp	– – –	0.05 mm (0.002 in.)
Valves		
Valve Clearance:		
Exhaust	0.33 ~ 0.38 mm (0.0130 ~ 0.0150 in.)	– – –
Intake	0.15 ~ 0.22 mm (0.0059 ~ 0.0087 in.)	– – –
Valve Head Thickness:		
Exhaust	0.8 mm (0.031 in.)	0.4 mm (0.02 in.)
Intake	0.5 mm (0.020 in.)	0.3 mm (0.01 in.)
Valve Stem Bend	TIR 0.01 mm (0.0004 in.) or less	TIR 0.05 mm (0.002 in.)
Valve Stem Diameter:		
Exhaust	4.455 ~ 4.470 mm (0.1754 ~ 0.1760 in.)	4.44 mm (0.175 in.)
Intake	4.475 ~ 4.490 mm (0.1762 ~ 0.1768 in.)	4.46 mm (0.176 in.)
Valve Guide Inside Diameter:		
Exhaust	4.500 ~ 4.512 mm (0.1772 ~ 0.1776 in.)	4.58 mm (0.180 in.)
Intake	4.500 ~ 4.512 mm (0.1772 ~ 0.1776 in.)	4.58 mm (0.180 in.)
Valve/Valve Guide Clearance (Wobble Method):		
Exhaust	0.08 ~ 0.16 mm (0.0031 ~ 0.0063 in.)	0.35 mm (0.014 in.)
Intake	0.03 ~ 0.10 mm (0.0012 ~ 0.0039 in.)	0.29 mm (0.011 in.)
Valve Seat Cutting Angle	45°, 32°, 60°	– – –
Valve Seating Surface:		
Outside Diameter:		
Exhaust	25.2 ~ 25.4 mm (0.99 ~ 1.00 in.)	– – –
Intake	29.4 ~ 29.6 mm (1.16 ~ 1.17 in.)	– – –
Width:		
Exhaust	1.6 ~ 2.0 mm (0.063 ~ 0.079 in.)	– – –
Intake	0.5 ~ 1.0 mm (0.020 ~ 0.039 in.)	– – –
Valve Spring Free Length:		
Exhaust	37.1 mm (1.46 in.)	35.8 mm (1.41 in.)
Intake	39.6 mm (1.56 in.)	38.0 mm (1.50 in.)

Special Tools and Sealants

Compression Gauge, 20 kgf/cm²:
57001-221

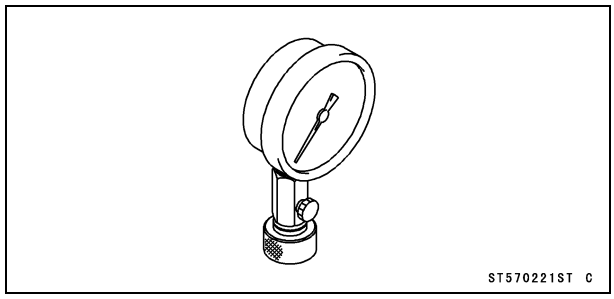

Valve Spring Compressor Assembly:
57001-241

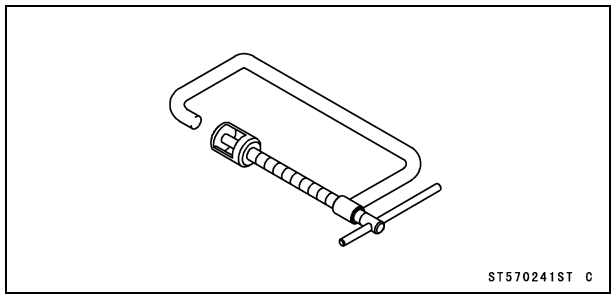

Valve Seat Cutter, 45° - ϕ27.5:
57001-1114

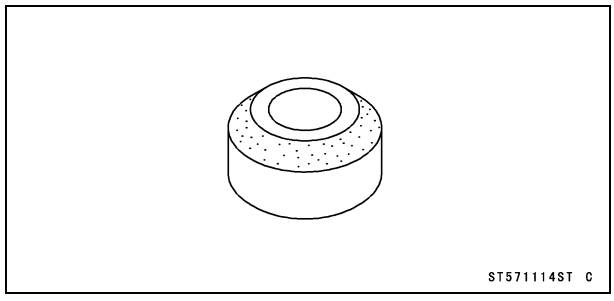

Valve Seat Cutter, 45° - ϕ32:
57001-1115

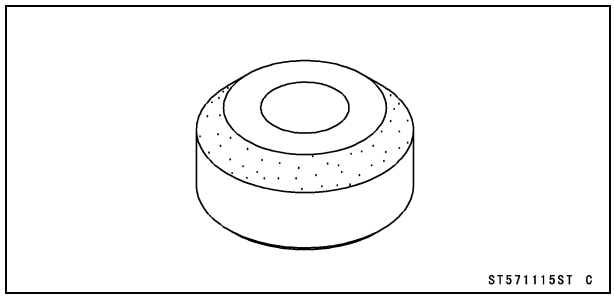

Valve Seat Cutter, 32° - ϕ28:
57001-1119

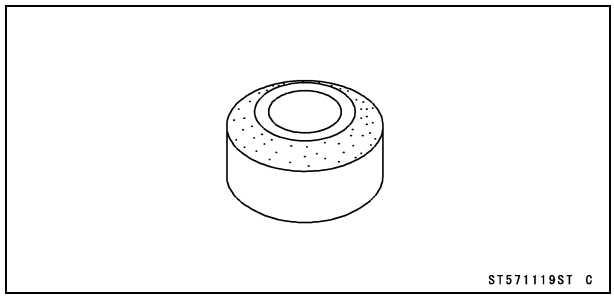

Valve Seat Cutter, 60° - ϕ30:
57001-1123

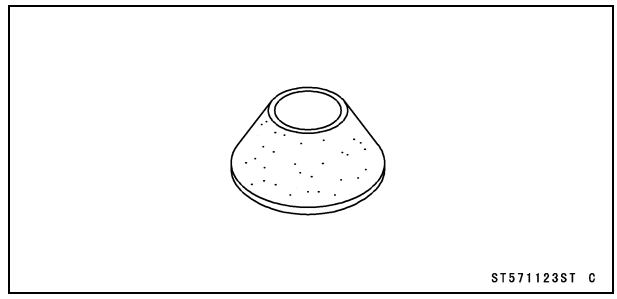

Valve Seat Cutter Holder Bar:
57001-1128

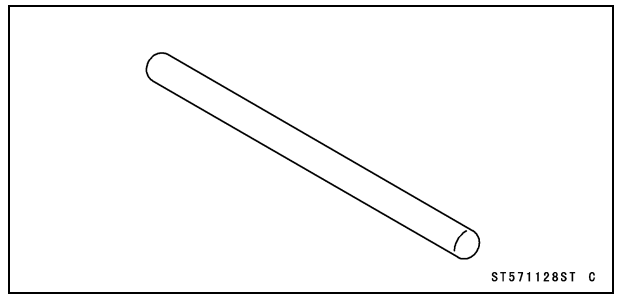

Valve Seat Cutter, 32° - ϕ33:
57001-1199

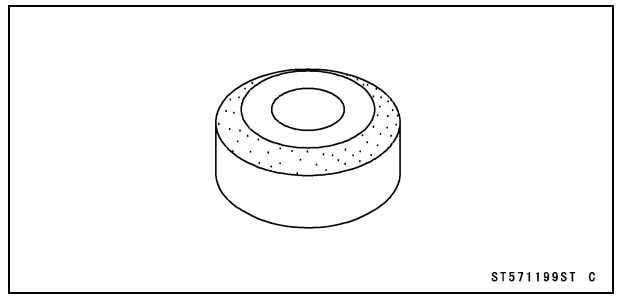

Compression Gauge Adapter, M10 × 1.0:
57001-1317

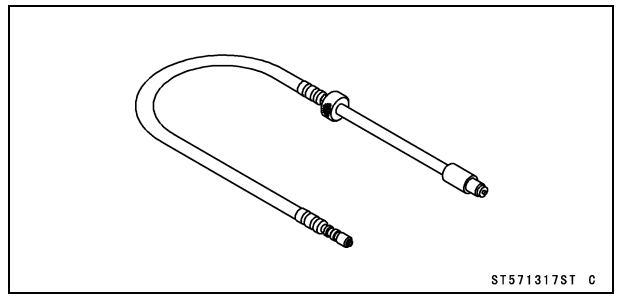

Valve Seat Cutter Holder, ϕ4.5:
57001-1330

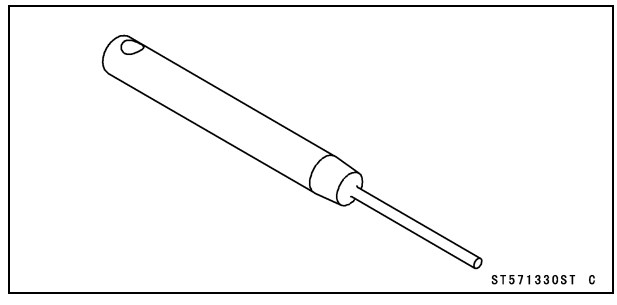

Special Tools and Sealants

Valve Guide Arbor, ϕ4.5:
57001-1331

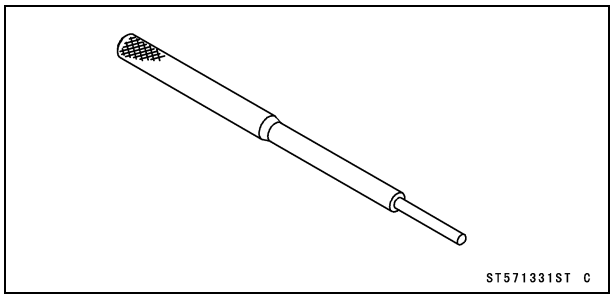

Valve Guide Reamer, ϕ4.5:
57001-1333

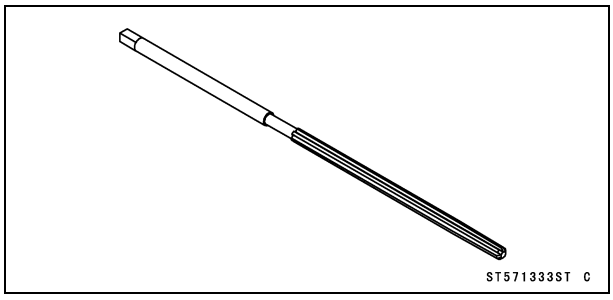

Valve Seat Cutter, 60° - ϕ27:
57001-1409

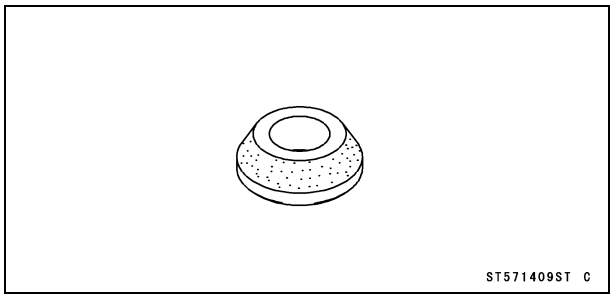

Valve Guide Driver:
57001-1564

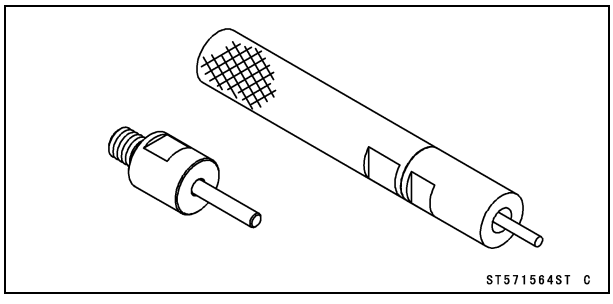

Valve Spring Compressor Adapter, ϕ24:
57001-1586

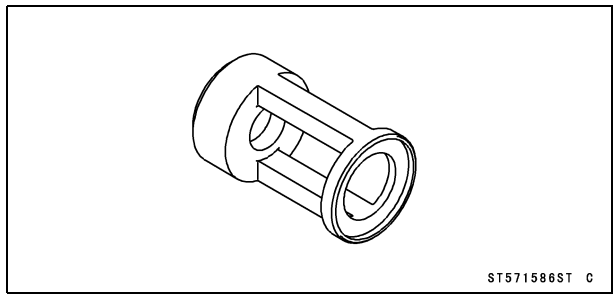

Spacer, ϕ9.6:
57001-1830

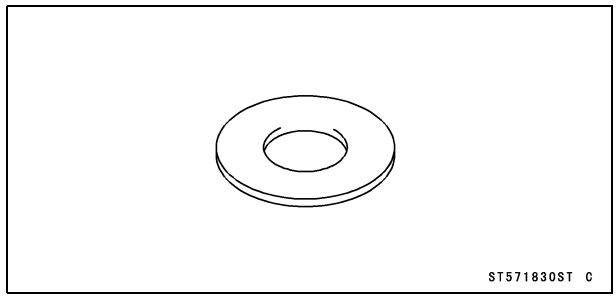

Liquid Gasket, TB1211F:
92104-0004

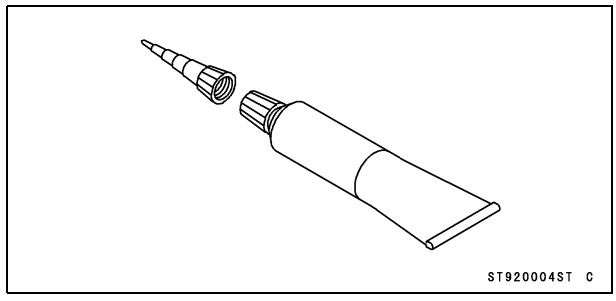

Liquid Gasket, TB1216B:
92104-1064

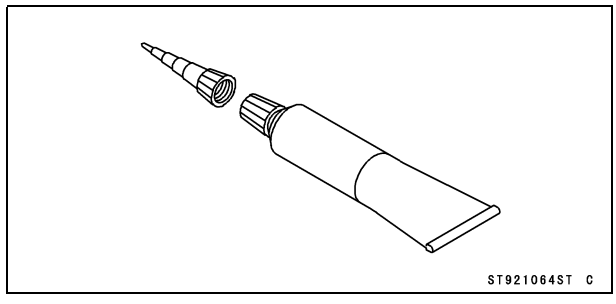

Clean Air System

Air Suction Valve Removal

- Remove:
  Air Switching Valve (see Air Switching Valve Removal)
  Air Suction Valve Cover Bolts [A] (Both Sides)
  Air Suction Valve Cover [B] (Both Sides)

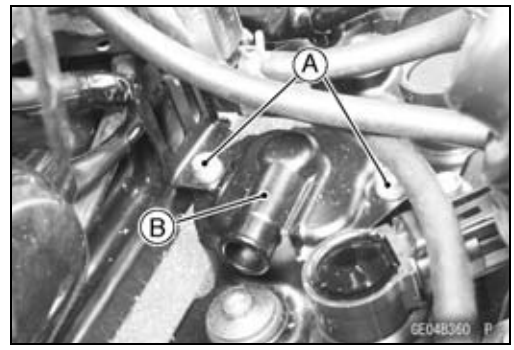

- Remove the air suction valve [A] on both sides.



- Remove the plates [A] on both sides.

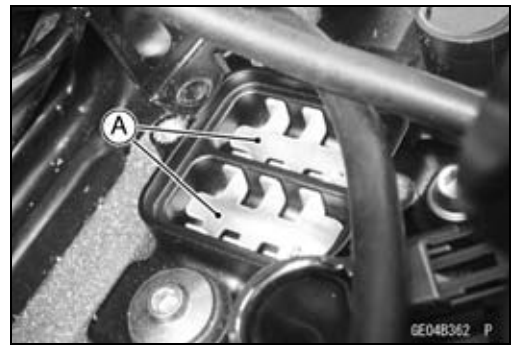

Air Suction Valve Installation

- Install:
  Plates [A]
  Air Suction Valve [B] (with White Mark [C])
  Air Suction Valve Covers [D]
  Bracket [E]
- Apply a non-permanent locking agent to the threads of the air suction valve cover bolts [F].

  Torque - Air Suction Valve Cover Bolts: 10 N·m (1.0 kgf·m, 89 in·lb)
- Install the air switching valve (see Air Switching Valve Installation).

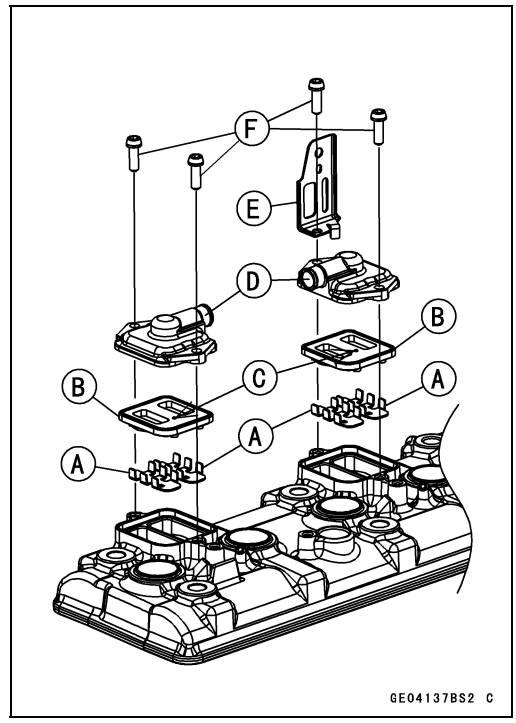

Clean Air System

Air Suction Valve Inspection

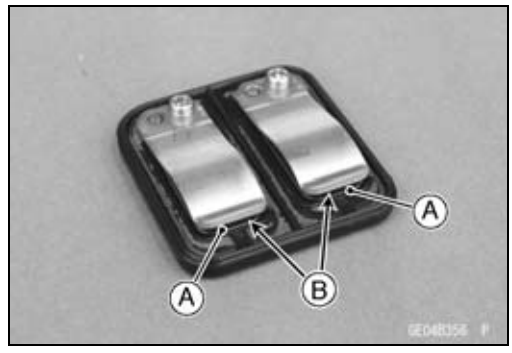

- Remove the air suction valve (see Air Suction Valve Removal).
- Visually inspect the reeds [A] for cracks, folds, warps, heat damage or other damage.

★If there is any doubt as to the condition of the reeds, replace the air suction valve as an assembly.

- Check the reed contact areas [B] of the valve holder for grooves, scratches, any signs of separation from the holder or heat damage.

★If there is any doubt as to the condition of the reed contact areas, replace the air suction valve as an assembly.

★If any carbon or other foreign particles have accumulated between the reed and the reed contact area, wash the valve assembly clean with a high flash-point solvent.

NOTICE
Do not scrape off the deposits with a scraper as this could damage the rubber, requiring replacement of the suction valve assembly.

Air Switching Valve Removal

NOTICE
Never drop the air switching valve especially on a hard surface. Such a shock to the air switching valve can damaged it.

- Remove:
  Fuel Tank (see Fuel Tank Removal in the Fuel System (DFI) chapter)
- Other than US and CA models, remove the canister (see Evaporative Emission Control System Inspection (Other than US and CA Models) in the periodic Maintenance chapter).

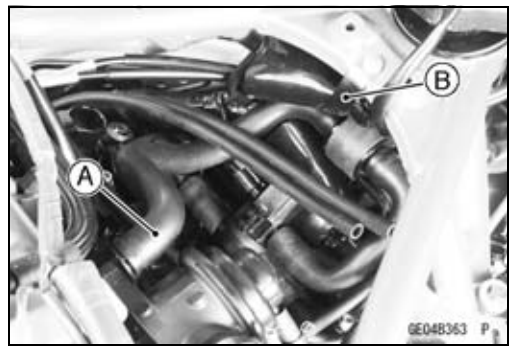

- Disconnect the air switching valve hose [A] from the bracket.
- For US and CA models, open the clamp [B].

Clean Air System

- For US and CA models, remove the air switching valve filter [A] from the bracket [B].

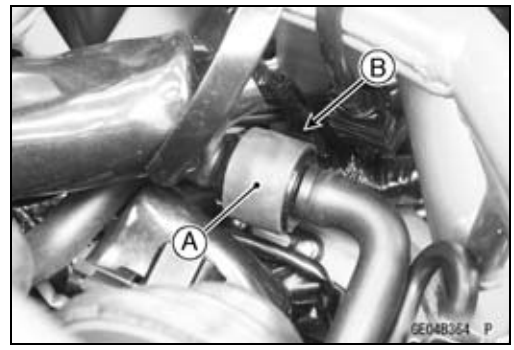

- Disconnect the connector [A].
- Disconnect the hoses [B] from the air suction valve covers, and remove the air switching valve [C].

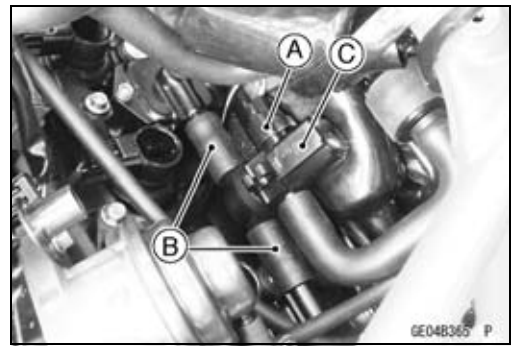

Air Switching Valve Installation

- Installation is the reverse of removal.
- Install the air switching valve and hoses (see Cable, Wire, and Hose Routing section in the Appendix chapter).

Air Switching Valve Operation Test

- Refer to the Air Suction System Damage Inspection in the Periodic Maintenance chapter.

Air Switching Valve Unit Test

- Refer to the Air Switching Valve Unit Test in the Electrical System chapter.

Clean Air System Hose Inspection

- Be certain that all the hoses are routed without being flattened or kinked, and are connected correctly to the air cleaner housing, air switching valve and air suction valve covers.

★If they are not, correct them. Replace them if they are damaged.

Cylinder Head Cover

Cylinder Head Cover Removal

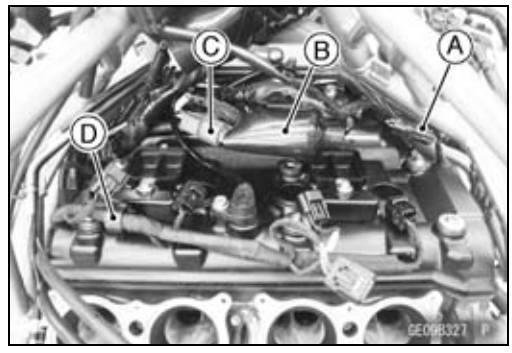

- Remove:
  Right Middle Fairing (see Middle Fairing Removal in the Frame chapter)
  Air Suction Valves (see Air Suction Valve Removal)
  Throttle Body Assy (see Throttle Body Assy Removal in the Fuel System (DFI) chapter)
  Stick Coils (see Stick Coil Removal in the Electrical System chapter)
- Remove the crankshaft sensor lead connector [A] from the bracket.
- Slide the dust cover [B] and disconnect the camshaft position sensor connector [C].
- Open the clamp [D].

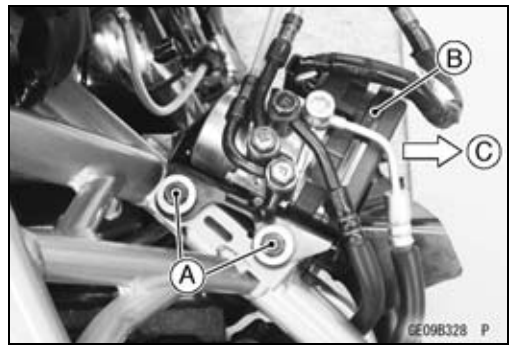

- Remove the bolts [A] and move the ABS hydraulic unit [B] rightward [C].



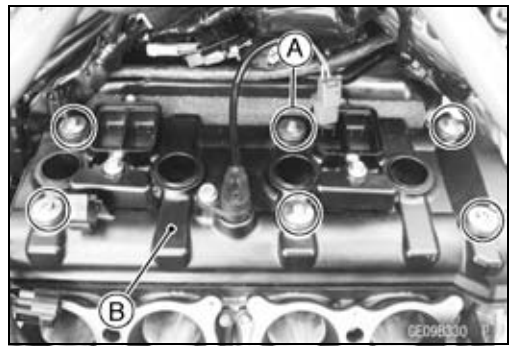

- Remove:
  Cylinder Head Cover Bolts [A] with Rubber Washers
  Cylinder Head Cover [B]

Cylinder Head Cover

Cylinder Head Cover Installation

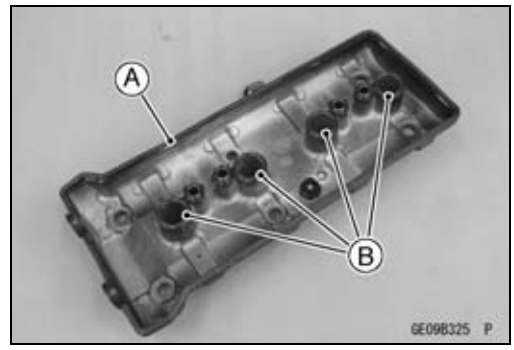

- Replace the cylinder head cover gasket [A] and plug hole gaskets [B] with new ones.
- Using a high flash-point solvent, clean off any oil or dirt that may be on the mating surface. Dry them with a clean cloth.

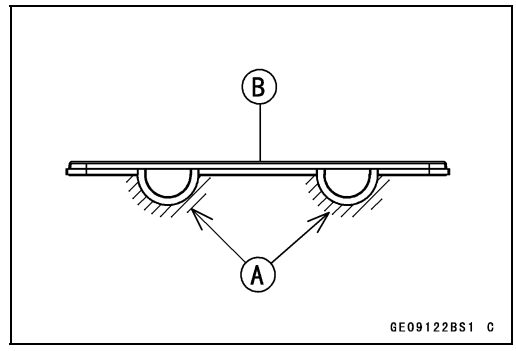

- Apply liquid gasket [A] to the cylinder head cover gasket [B] as shown.

  Sealant - Liquid Gasket, TB1216B: 92104-1064

NOTE

○*When the liquid gasket is applied to the parts, finish the part assembling before the liquid gasket starts curing (within 20 minutes after the liquid gasket is applied).*

- Apply liquid gasket [A] to the cylinder head cover.

  Sealant - Liquid Gasket, TB1211F: 92104-0004

- Install the gaskets to the cylinder head cover.

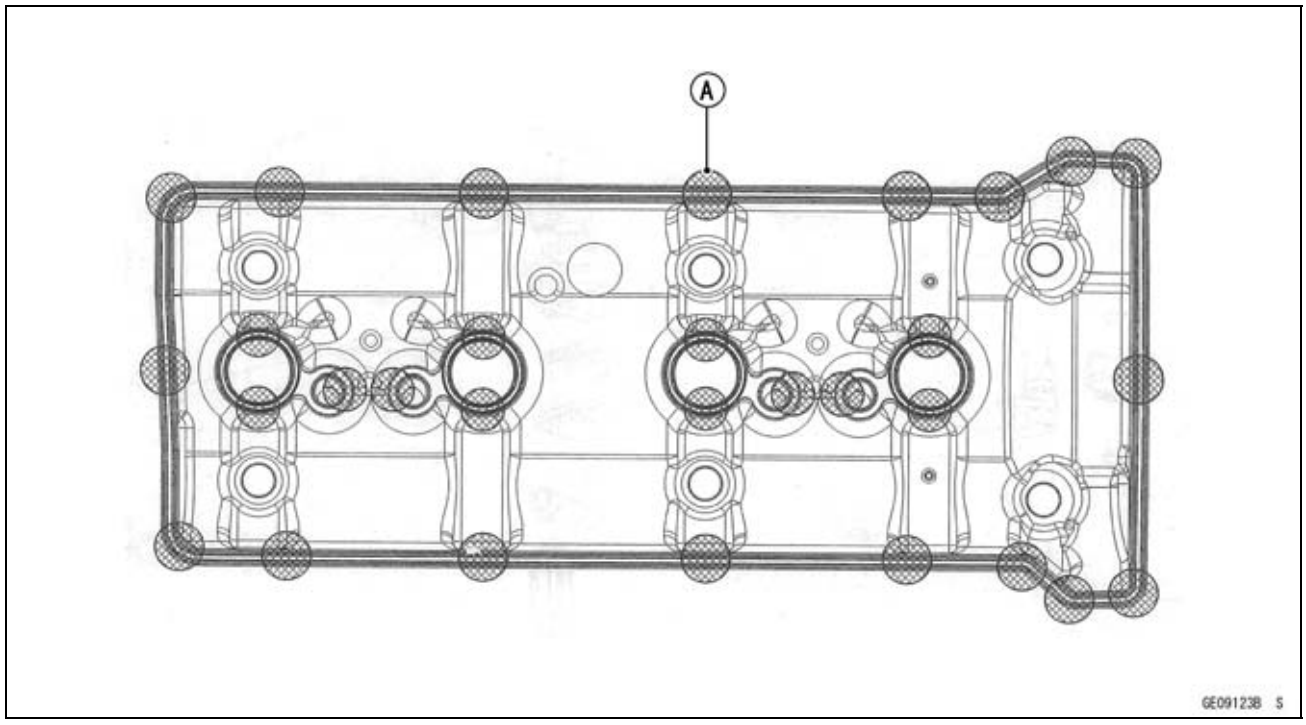

Cylinder Head Cover

- Install the cylinder head cover with the gaskets.
- Replace the rubber washers [A] with new ones.
- Install the rubber washers with the metal side [B] faces upward.

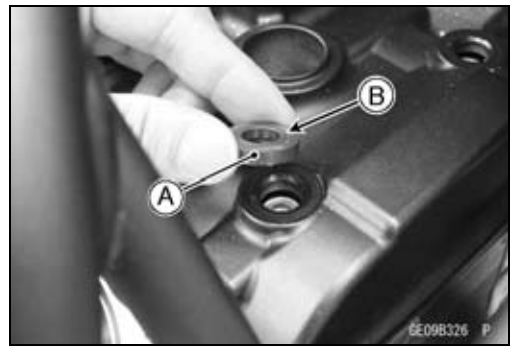

- Tighten the cover bolts following the specified tightening sequence [1 ~ 6].

Torque - Cylinder Head Cover Bolts: 10 N·m (1.0 kgf·m, 89 in·lb)

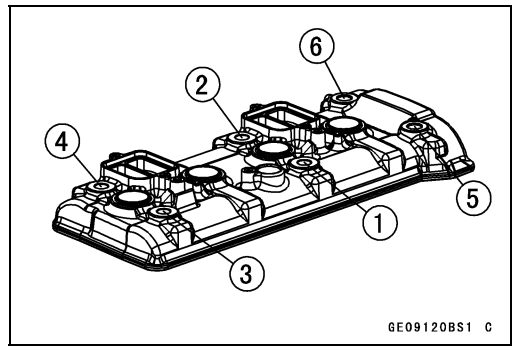

- When installing the sub covers [A], note the following.
- Install:
  Collars [B]
  Sub Covers
- Apply a non-permanent locking agent to the threads of the sub cover bolts [C], and tighten them.

Torque - Sub Cover Bolts: 10 N·m (1.0 kgf·m, 89 in·lb)

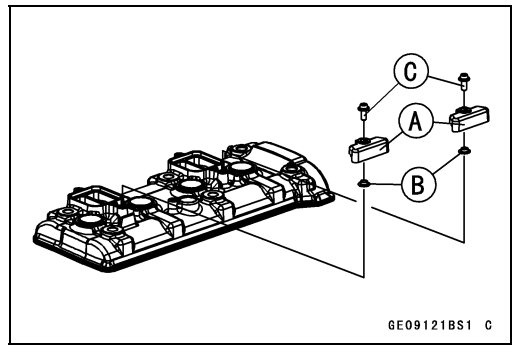

- Install the removed parts (see appropriate chapters).

Camshaft Chain Tensioner

Camshaft Chain Tensioner Removal

NOTICE
Do not turn over the crankshaft while the tensioner is removed. This could upset the camshaft chain timing, and damage the valves.

- Remove:
  Camshaft Chain Tensioner Mounting Bolts [A]
  Camshaft Chain Tensioner [B]

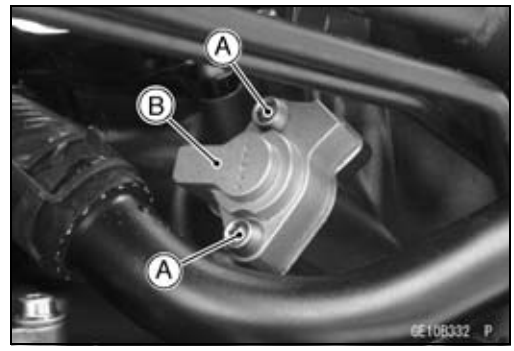

Camshaft Chain Tensioner Installation

- Opening the snap ring [A], release it and turn the tensioner body [B] clockwise while holding the push rod [C].

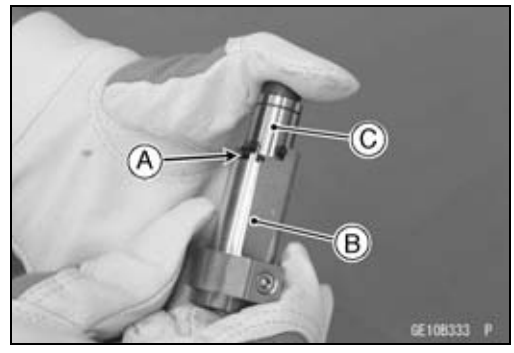

- Turning the tensioner body clockwise, slide the stopper [A] into the groove [B] of the push rod [C].

NOTE

○*Be careful not to fit the snap ring [D] into the groove.*

Good [E]
Bad [F]

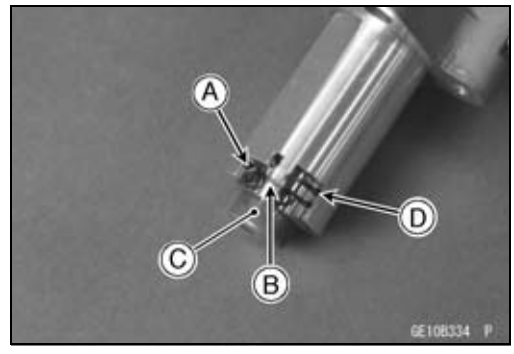

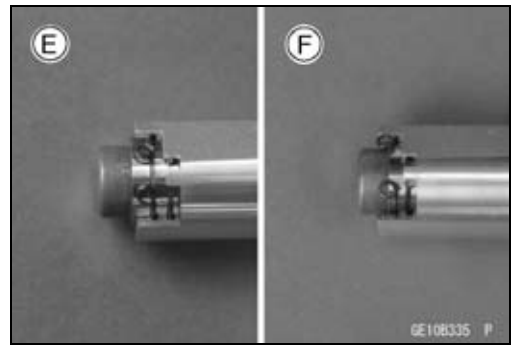

Camshaft Chain Tensioner

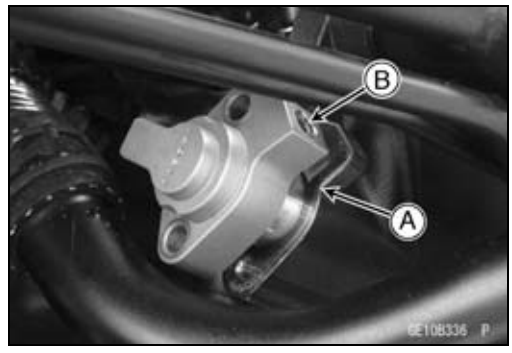

- Replace the gasket [A] with a new one.
- Install the tensioner body so that the plug [B] faces upward.
- Tighten:

Torque - Camshaft Chain Tensioner Mounting Bolts: 10 N·m (1.0 kgf·m, 89 in·lb)

- Turn the crankshaft 2 turns clockwise to allow the tensioner to expand and recheck the camshaft chain timing.

NOTE

○*You hear the sound from which the push rod moves out.*
○*If you do not hear the sound, reassemble the camshaft chain tensioner.*

NOTICE
If you start the engine in case that the sound can not be heard, the engine may be damaged.

Camshaft, Camshaft Chain

Camshaft Removal

- Remove the cylinder head cover (see Cylinder Head Cover Removal).
- Remove the crankshaft timing plug [A] on the clutch cover.

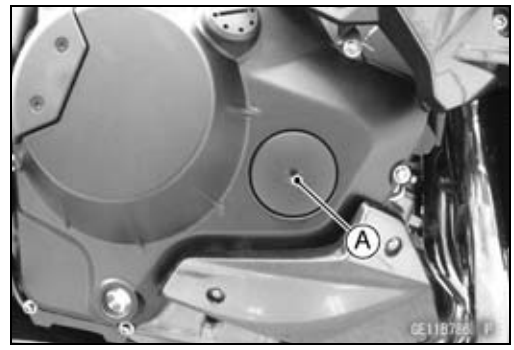

- Using a wrench on the timing rotor bolt [A], turn the crankshaft clockwise until the line [B] (TDC mark for #1,4 pistons) on the timing rotor is aligned with the mating surface [C] of the crankcase.

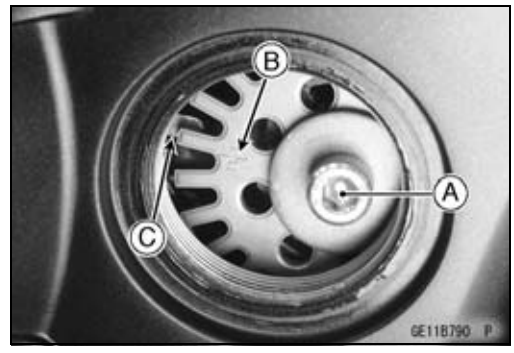

- Remove the camshaft chain tensioner (see Camshaft Chain Tensioner Removal).
- Loosen the upper camshaft chain guide bolts and camshaft cap bolts gradually and evenly as shown sequence [1 ~ 20], and remove them.
- Remove:
  Upper Camshaft Chain Guide [A]
  Camshaft Caps [B]
  Camshafts [C]
- Stuff a clean cloth into the chain tunnel to keep any parts from dropping into the crankcase.

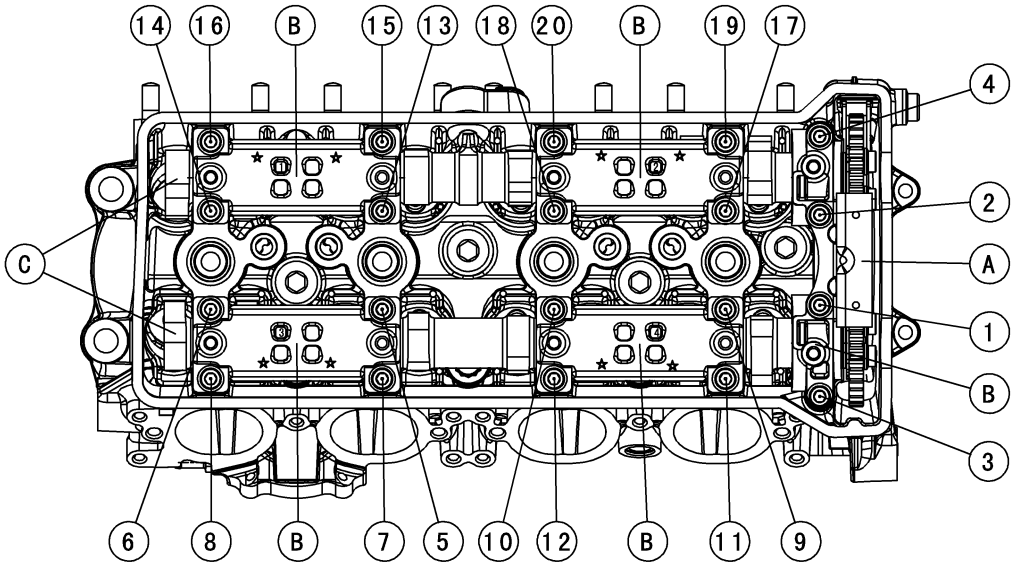

Camshaft, Camshaft Chain

● Remove:
Camshaft Sprocket Bolts [A]
Camshaft Sprockets

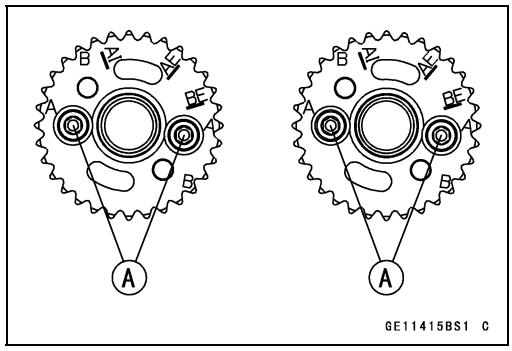

NOTICE

The crankshaft may be turned while the camshafts are removed. Always pull the chain taut while turning the crankshaft. This avoids kinking the chain on the lower (crankshaft) sprocket. A kinked chain could damage both the chain and the sprocket.

Camshaft Installation

NOTE

○*The intake camshaft has the projection [A] for camshaft position sensor.*

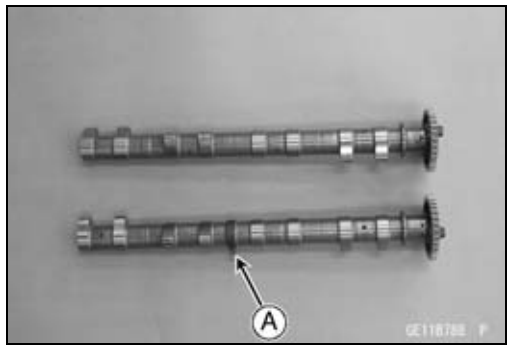

● Install the camshaft sprockets as shown.
"A" Marks [A]

○The intake camshaft sprocket and exhaust camshaft sprocket are identical.

● Apply a non-permanent locking agent to the threads of the camshaft sprocket bolts and tighten them.

Torque - Camshaft Sprocket Bolts: 15 N·m (1.5 kgf·m, 11 ft·lb)

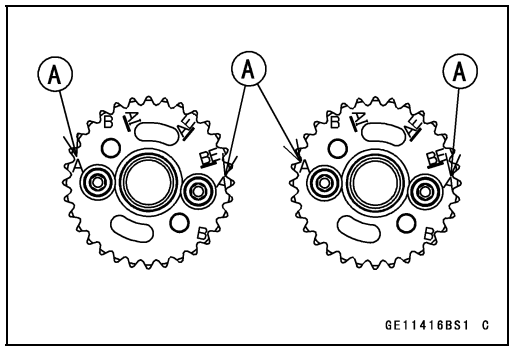

● Apply molybdenum disulfide oil solution to all cam parts, journals and tappets.

★If a new camshaft is to be used, apply a thin coat of molybdenum disulfide grease to the cam surfaces.

● Using a wrench on the timing rotor bolt [A], turn the crankshaft clockwise until the line [B] (TDC mark for #1,4 pistons) on the timing rotor is aligned with the mating surface [C] of the crankcase.

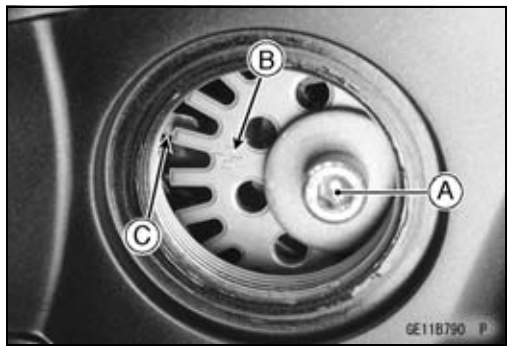

NOTICE

The crankshaft may be turned while the camshafts are removed. Always pull the chain taut while turning the crankshaft. This avoids kinking the chain on the lower sprocket. A kinked chain could damage both the chain and the sprocket.

Camshaft, Camshaft Chain

- Pull the tension side (exhaust side) [A] of the chain taut to install the chain.
- Engage the camshaft chain with the sprockets so that timing marks on the sprockets are positioned as shown.

○The timing marks must be aligned with the cylinder head upper surface [B].
"AE" Mark [C]
"AI" Mark [D]
#1 Pin [E]
#2 Pin [F]
#28 Pin [G]
#29 Pin [H]

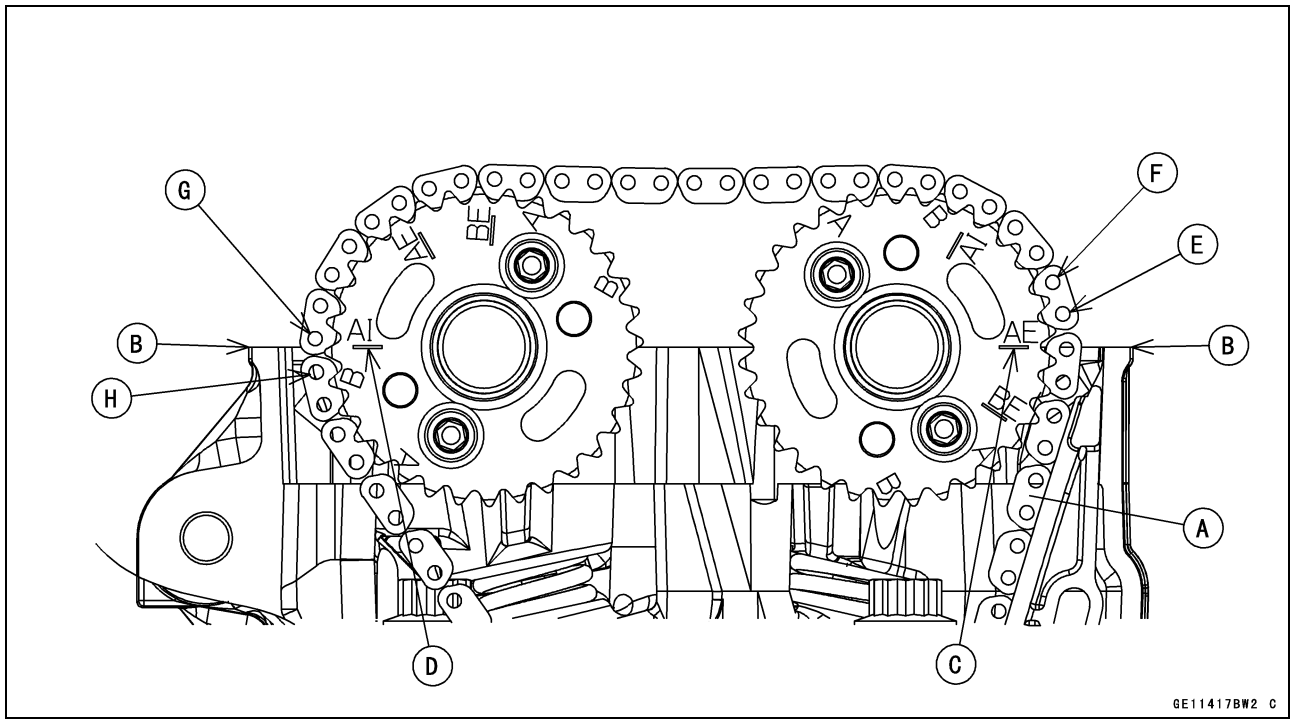

- Apply molybdenum disulfide oil solution to all cam lobes, journals and thrust journals.

Camshaft, Camshaft Chain

- Install the ten dowel pins on the ★ marks [A].
- Install the camshaft cap, following the identification No. [B] and upper camshaft chain guide [C].
- First tighten the all camshaft cap bolts evenly to seat the camshaft in place, then tighten all bolts following the specified tightening sequence [1 ~ 20].

Torque - Camshaft Cap Bolts [1 ~ 18]: 12 N·m (1.2 kgf·m, 106 in·lb)
Upper Camshaft Chain Guide Bolts [19, 20]: 12 N·m (1.2 kgf·m, 106 in·lb)

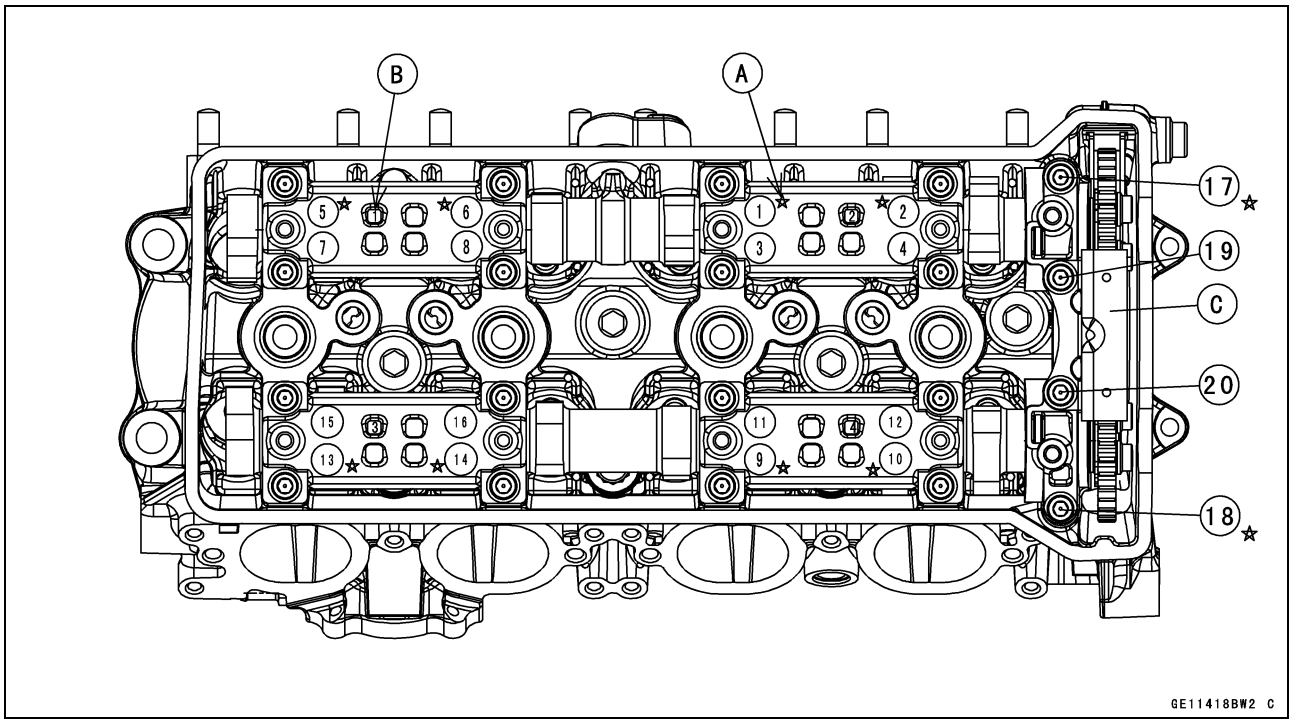

- Install the camshaft chain tensioner (see Camshaft Chain Tensioner Installation).
- Turn the crankshaft 2 turns clockwise to allow the tensioner to expand and recheck the camshaft chain timing.
- Replace the O-ring on the crankshaft timing plug with a new one.
- Apply grease to the O-ring.
- Tighten:

Torque - Crankshaft Timing Plug: 25 N·m (2.5 kgf·m, 18 in·lb)

- Install the removed parts (see appropriate chapters).

Camshaft, Camshaft Chain

Camshaft, Camshaft Cap Wear Inspection

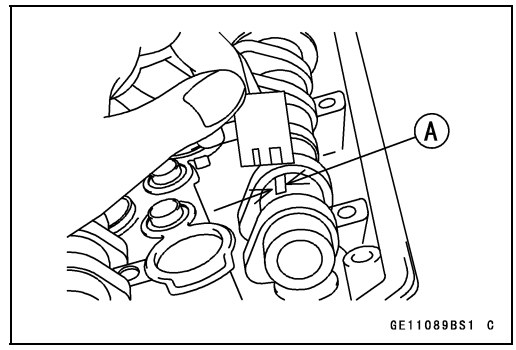

- Remove the camshaft caps (see Camshaft Removal).
- Cut the strips of plastigage (press gauge) to journal width. Place a strip on each journal parallel to the camshaft installed in the correct position.
- Tighten the camshaft cap bolts and upper camshaft chain guide bolts to the specified torque (see Camshaft Installation).

NOTE

○*Do not turn the camshaft when the plastigage is between the journal and camshaft cap.*

- Remove the camshaft cap again, measure each clearance between the camshaft journal and the camshaft cap using plastigage [A].

Camshaft Journal/Cap Clearance
Standard: 0.038 ~ 0.081 mm (0.0015 ~ 0.0032 in.)
Service Limit: 0.17 mm (0.0067 in.)

★If any clearance exceeds the service limit, measure the diameter of each camshaft journal with a micrometer.

Camshaft Journal Diameter
Standard: 23.940 ~ 23.962 mm (0.94252 ~ 0.94338 in.)
Service Limit: 23.91 mm (0.9413 in.)

★If the camshaft journal diameter is less than the service limit, replace the camshaft with a new one and measure the clearance again.
★If the clearance still remains out of the service limit, replace the cylinder head unit.

Camshaft Runout Inspection

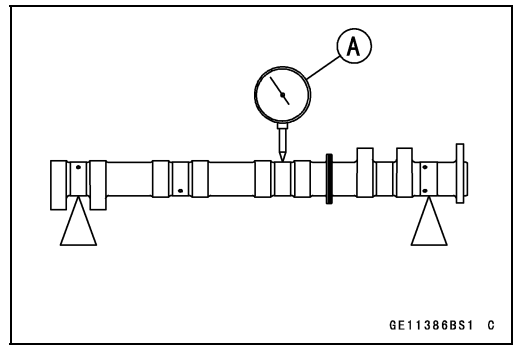

- Remove the camshafts (see Camshaft Removal).
- Set the camshaft in a camshaft alignment jig or on V blocks.
- Measure the runout with a dial gauge [A] at the specified place as shown.

★If the runout exceeds the service limit, replace the camshaft.

Camshaft Runout
Standard: TIR 0.02 mm (0.0008 in.) or less
Service Limit: TIR 0.1 mm (0.004 in.)

Camshaft, Camshaft Chain

Cam Wear Inspection

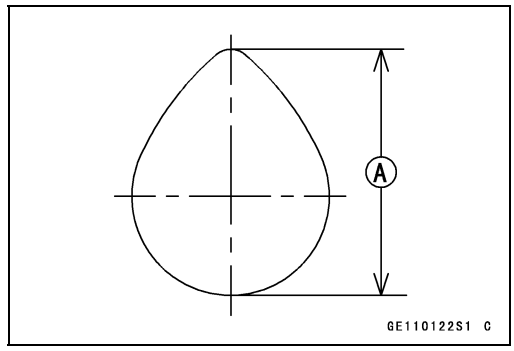

- Remove the camshafts (see Camshaft Removal).
- Measure the height [A] of each cam with a micrometer.

★If the cams are worn down past the service limit, replace the camshaft.

Cam Height

Standard:

Exhaust	**33.943 ~ 34.057 mm (1.3363 ~ 1.3408 in.)**
Intake	**33.743 ~ 33.857 mm (1.3285 ~ 1.3330 in.)**

Service Limit:

Exhaust	**33.84 mm (1.332 in.)**
Intake	**33.64 mm (1.324 in.)**

Camshaft Chain Removal

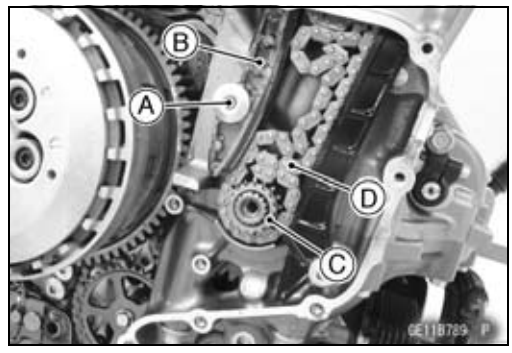

- Remove:

  Camshaft (see Camshaft Removal)
  Timing Rotor (see Timing Rotor Removal in the Electrical System chapter)
  Rear Camshaft Chain Guide Bolt [A]
  Rear Camshaft Chain Guide [B]
  Crankshaft Sprocket [C]
  Camshaft Chain [D]

Camshaft Chain Installation

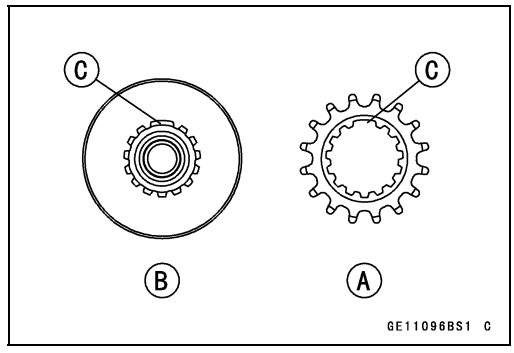

- Install the camshaft chain from head side.
- Engage the camshaft chain with the crankshaft sprocket.
- Install the crankshaft sprocket [A] on the crankshaft [B] with their teeth [C] aligned.
- Install the removed parts (see appropriate chapters).

Cylinder Head

Cylinder Compression Measurement

NOTE

○*Use the battery which is fully charged.*

- Warm up the engine thoroughly.
- Stop the engine.
- Remove the spark plugs (see Spark Plug Replacement in the Periodic Maintenance chapter).

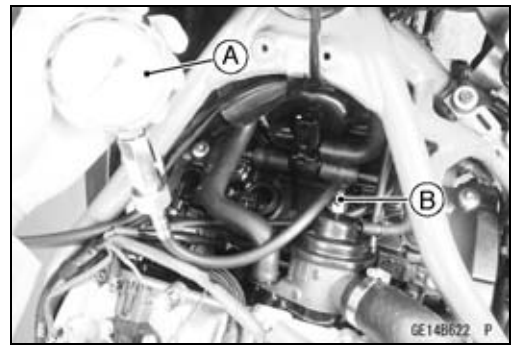

- Attach the compression gauge [A] and adapter [B] firmly into the spark plug hole.
- Using the starter motor, turn the engine over with the throttle fully open until the compression gauge stops rising; the compression is the highest reading obtainable.

Special Tools - Compression Gauge, 20 kgf/cm²: 57001-221
Compression Gauge Adapter, M10 × 1.0: 57001-1317

Cylinder Compression
Usable Range: 784 ~ 1 218 kPa (8.00 ~ 12.42 kgf/cm², 114 ~ 176.6 psi) @270 r/min (rpm)

- Repeat the measurement for the other cylinders.
- Install the spark plugs (see Spark Plug Replacement in the Periodic Maintenance chapter).

○The following table should be consulted if the obtainable compression reading is not within the usable range.

Problem	Diagnosis	Remedy (Action)
Cylinder compression is higher than usable range.	Carbon accumulation on piston and in combustion chamber possibly due to damaged valve stem oil seal and/or damaged piston oil rings (This may be indicated by white exhaust smoke).	Remove the carbon deposits and replace damaged parts if necessary.
	Incorrect cylinder head gasket thickness	Replace the gasket with a standard part.
Cylinder compression is lower than usable range.	Gas leakage around cylinder head	Replace damaged gasket and check the cylinder head warp.
	Bad condition of valve seating	Repair if necessary.
	Incorrect valve clearance	Adjust the valve clearance.
	Incorrect piston/cylinder clearance	Replace the piston and/or cylinder.
	Piston seizure	Inspect the cylinder and replace/repair the cylinder and/or piston as necessary.
	Bad condition of piston ring and/or piston ring grooves	Replace the piston and/or the piston rings.

Cylinder Head

Cylinder Head Removal

- Remove the engine (see Engine Removal in the Engine Removal/Installation chapter).
- Set the engine on a clean surface and hold the engine steady while parts are being removed.
- Remove:
  Cylinder Head Cover (see Cylinder Head Cover Removal)
  Camshafts (see Camshaft Removal)
  Timing Rotor (see Timing Rotor Removal in the Electrical System chapter)
  Rear Camshaft Chain Guide Bolt [A]
  Rear Camshaft Chain Guide [B]
  Crankshaft Sprocket [C]
  Camshaft Chain [D]
  Front Camshaft Chain Guide Bolt (Lower) [E]
  Front Camshaft Chain Guide Bolt (Upper) [F]
  Front Camshaft Chain Guide [G]

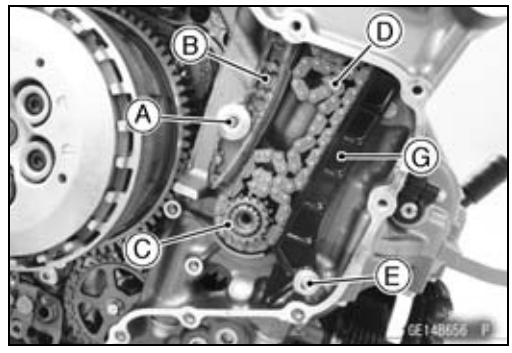

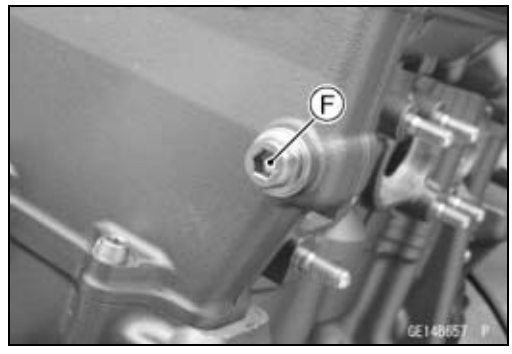

- Remove:
  Coolant Drain Bolt (Cylinder) [A]
  Washer
- Drain the coolant.

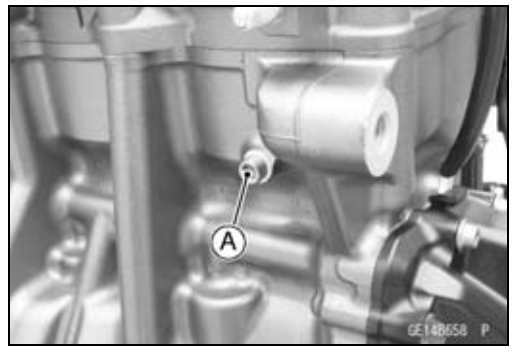

- Loosen the M6 and M10 cylinder head bolts as shown sequence [1 ~ 12], and remove them and washers.
- Remove the cylinder head.

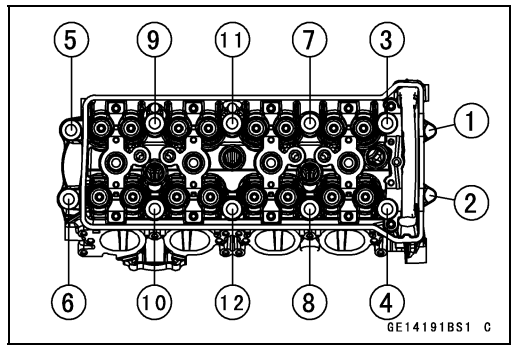

Cylinder Head Installation

NOTE

○*The camshaft cap is machined with the cylinder head, so if a new cylinder head is installed, use the cap that is supplied with the new head.*

- Install the dowel pins.
- Replace the cylinder head gasket with a new one.
- Install the cylinder head.

Cylinder Head

- Replace the cylinder head bolt washers with new ones.
- Apply molybdenum disulfide oil solution to both sides [A] of the cylinder head bolt washers and the threads [B] of the M10 cylinder head bolts [C].

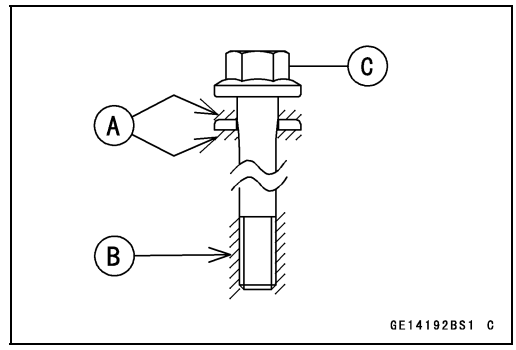

- Tighten the M10 cylinder head bolts following the tightening sequence [1 ~10].

Torque - Cylinder Head Bolts (M10):
First: 30 N·m (3.1 kgf·m, 22 ft·lb)
Final: 67 N·m (6.8 kgf·m, 49 ft·lb)

- Tighten the M6 cylinder head bolts as shown sequence [11, 12].

Torque - Cylinder Head Bolts (M6): 12 N·m (1.2 kgf·m, 106 in·lb)

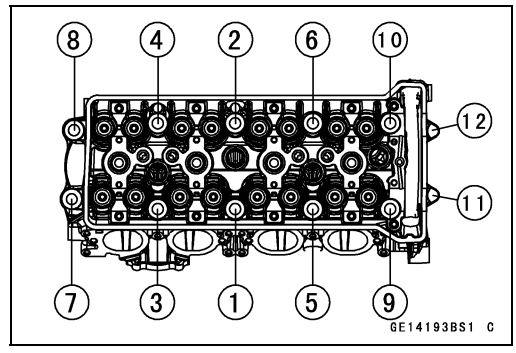

- Replace the O-ring [A].
- Apply grease to the O-ring.
- Install the front camshaft chain guide.
- Tighten:

Torque - Front Camshaft Chain Guide Bolt (Upper): 25 N·m (2.5 kgf·m, 18 ft·lb)

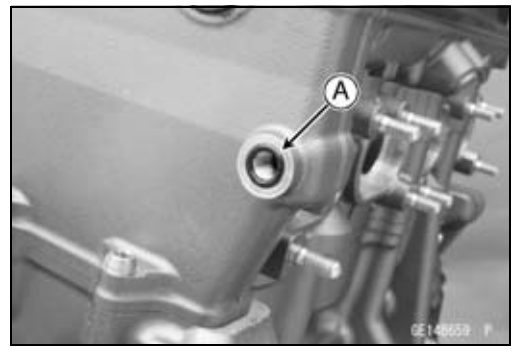

- Install the collar [A].
- Tighten:

Torque - Front Camshaft Chain Guide Bolt (Lower) [B]: 12 N·m (1.2 kgf·m, 106 in·lb)

- Install:
  Camshaft Chain and Crankshaft Sprocket [C] (see Camshaft Chain Installation)
  Rear Camshaft Chain Guide [D]
- Tighten:

Torque - Rear Camshaft Chain Guide Bolt [E]: 25 N·m (2.5 kgf·m, 18 ft·lb)

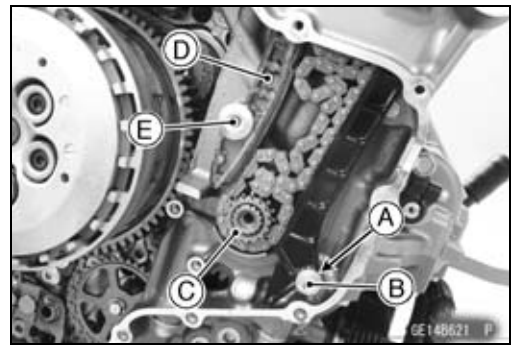

Cylinder Head

- Replace the washer with a new one.
- Tighten the coolant drain bolt (cylinder) [A] with washer.
- Install the removed parts (see appropriate chapters).

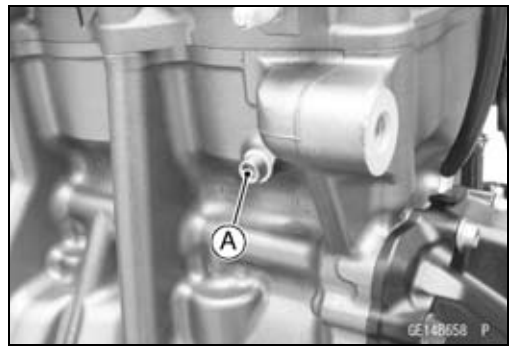

Cylinder Head Warp Inspection

- Clean the cylinder head.
- Lay a straightedge across the lower surface of the cylinder head at several positions.
- Use a thickness gauge [A] to measure the space between the straightedge [B] and the head.

Cylinder Head Warp
Standard: – – –
Service Limit: 0.05 mm (0.002 in.)

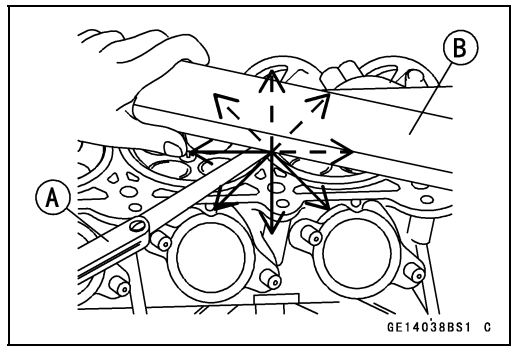

★If the cylinder head is warped more than the service limit, replace it.

★If the cylinder head is warped less than the service limit, repair the head by rubbing the lower surface on emery paper secured to a surface plate (first No. 200, then No. 400).

Valves

Valve Clearance Inspection

- Refer to the Valve Clearance Inspection in the Periodic Maintenance chapter.

Valve Clearance Adjustment

- Refer to the Valve Clearance Adjustment in the Periodic Maintenance chapter.

Valve Removal

- Remove the cylinder head (see Cylinder Head Removal).
- Remove the valve lifter and shim.

NOTE

○*Keep the valve lifter and shim locations so they can be installed in their original positions.*

- Using the valve spring compressor assembly, remove the valve.

Special Tools - Valve Spring Compressor Assembly [A]: 57001-241
Valve Spring Compressor Adapter, ϕ24 [B]: 57001-1586

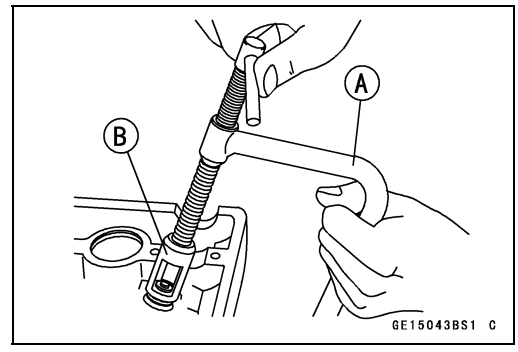

Valve Installation

- Replace the oil seal with a new one.
- Apply a thin coat of molybdenum disulfide grease to the valve stem before valve installation.
- Install the springs so that the closed coil end faces downwards.
  Valve Stem [A]
  Oil Seal [B]
  Spring Seat [C]
  Closed Coil End [D]
  Valve Spring [E]:
  EX - Pink Paint
  IN - Green Paint
  Retainer [F]
  Split Keepers [G]

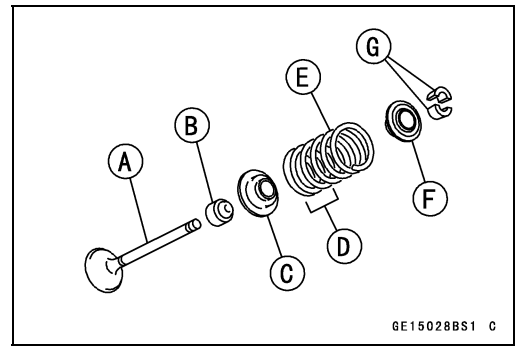

Valve Guide Removal

- Remove:
  Valve (see Valve Removal)
  Oil Seal
  Spring Seat
- Heat the area around the valve guide to 120 ~ 150°C (248 ~ 302°F), and hammer lightly on the valve guide arbor [A] to remove the guide from the top of the head.

NOTICE
Do not heat the cylinder head with a torch. This will warp the cylinder head. Soak the cylinder head in oil and heat the oil.

Special Tool - Valve Guide Arbor, ϕ4.5: 57001-1331

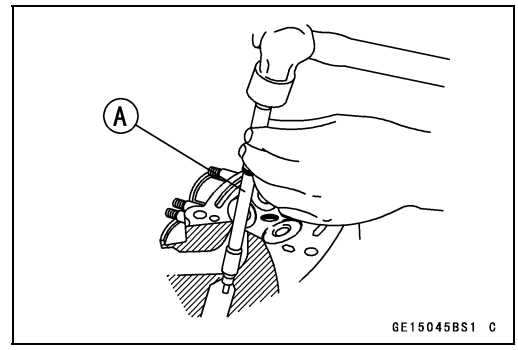

Valves

Valve Guide Installation

- Apply engine oil to the valve guide outer surface before installation.
- Heat the area around the valve guide hole to about 120 ~ 150°C (248 ~ 302°F).

NOTICE
Do not heat the cylinder head with a torch. This Will warp the cylinder head. Soak the cylinder head and heat the oil.

- Using the valve guide driver [A] and spacer [B], press and insert the valve guide in until the attachment surface [C] touches the head surface.
  13.3 ~ 13.5 mm (0.524 ~ 0.531 in.) [D]

  Special Tools - Valve Guide Driver: 57001-1564
  Spacerϕ9.6: 57001-1830

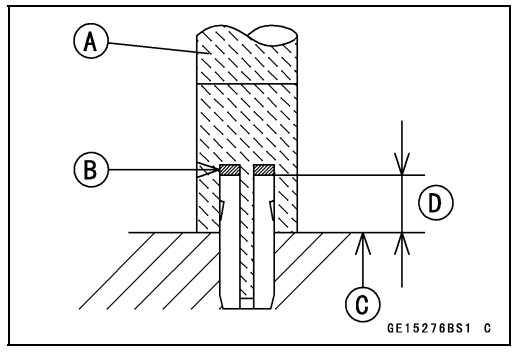

- Ream the valve guide with valve guide reamer [A], even if the old guide is reused.

  Special Tool - Valve Guide Reamer, ϕ4.5: 57001-1333

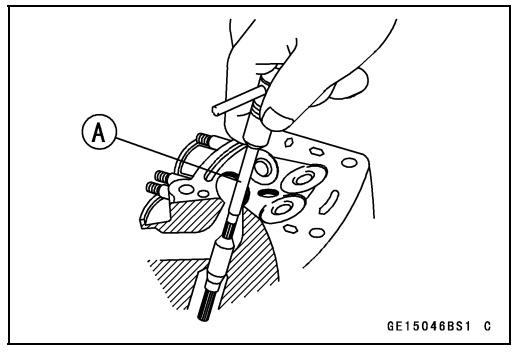

Valve-to-Guide Clearance Measurement (Wobble Method)

If a small bore gauge is not available, inspect the valve guide wear by measuring the valve to valve guide clearance with the wobble method as indicated below.

- Insert a new valve [A] into the guide [B] and set a dial gauge against the stem perpendicular to it as close as possible to the cylinder head mating surface.
- Move the stem back and forth [C] to measure valve/valve guide clearance.
- Repeat the measurement in a direction at a right angle to the first.

★If the reading exceeds the service limit, replace the guide.

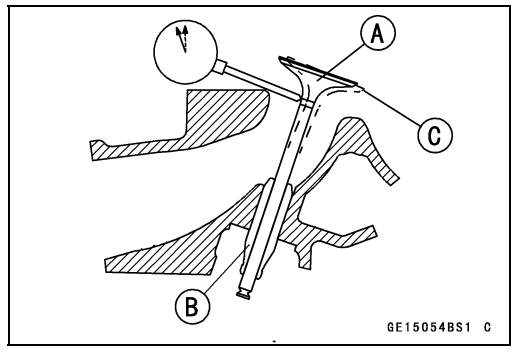

Valves

NOTE

○*The reading is not actual valve/valve guide clearance because the measuring point is above the guide.*

Valve/Valve Guide Clearance (Wobble Method)

Standard:

Exhaust 0.08 ~ 0.16 mm (0.0031 ~ 0.0063 in.)

Intake 0.03 ~ 0.10 mm (0.0012 ~ 0.0039 in.)

Service Limit:

Exhaust 0.35 mm (0.014 in.)

Intake 0.29 mm (0.011 in.)

Valve Seat Inspection

- Remove the valve (see Valve Removal).
- Check the valve seating surface [A] between the valve [B] and valve seat [C].

○Measure the outside diameter [D] of the seating pattern on the valve seat.

★If the outside diameter is too large or too small, repair the seat (see Valve Seat Repair).

Valve Seating Surface Outside Diameter

Standard:

Exhaust 25.2 ~ 25.4 mm (0.99 ~ 1.00 in.)

Intake 29.4 ~ 29.6 mm (1.16 ~ 1.17 in.)

○Measure the seat width [E] of the portion where there is no build-up carbon (white portion) of the valve seat with a vernier caliper.

Good [F]

★If the width is too wide [G], too narrow [H] or uneven [J], repair the seat (see Valve Seat Repair).

Valve Seating Surface Width

Standard:

Exhaust 1.6 ~ 2.0 mm (0.063 ~ 0.079 in.)

Intake 0.5 ~ 1.0 mm (0.020 ~ 0.039 in.)

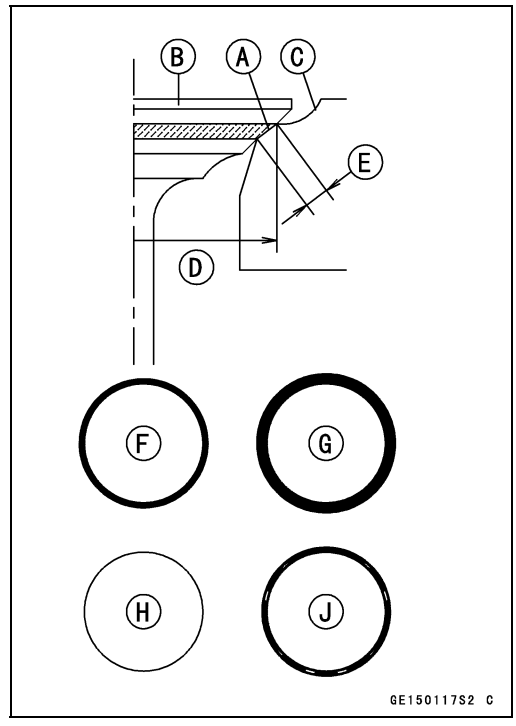

Valve Seat Repair

- Repair the valve seat with the valve seat cutters [A].

Special Tools - Valve Seat Cutter Holder Bar [B]: 57001 -1128

Valve Seat Cutter Holder, ϕ4.5 [C]: 57001 -1330

[For Exhaust Valve Seat]

Valve Seat Cutter, 45° - ϕ27.5: 57001-1114

Valve Seat Cutter, 32° - ϕ28: 57001-1119

Valve Seat Cutter, 60° - ϕ27: 57001-1409

[For Intake Valve Seat]

Valve Seat Cutter, 45° - ϕ32: 57001-1115

Valve Seat Cutter, 32° - ϕ33: 57001-1199

Valve Seat Cutter, 60° - ϕ30: 57001-1123

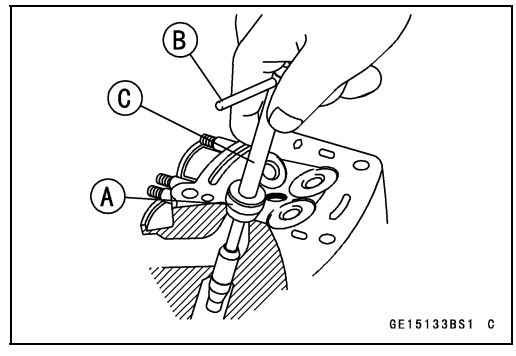

Valves

Seat Cutter Operation Care

1. This valve seat cutter is developed to grind the valve for repair. Therefore the cutter must not be used for other purposes than seat repair.
2. Do not drop or shock the valve seat cutter, or the diamond particles may fall off.
3. Do not fail to apply engine oil to the valve seat cutter before grinding the seat surface. Also wash off ground particles sticking to the cutter with washing oil.

NOTICE
Do not use a wire brush to remove the metal particles from the cutter. It will take off the diamond particles.

4. Setting the valve seat cutter holder in position, operate the cutter in one hand. Do not apply too much force to the diamond portion.

NOTE

○*Prior to grinding, apply engine oil to the cutter and during the operation, wash off any ground particles sticking to the cutter with washing oil.*

5. After use, wash it with washing oil and apply thin layer of engine oil before storing.

Marks Stamped on the Cutter

The marks stamped on the back of the cutter [A] represent the following.

60° ..... Cutter angle [B]

37.5ϕ ..... Outer diameter of cutter [C]

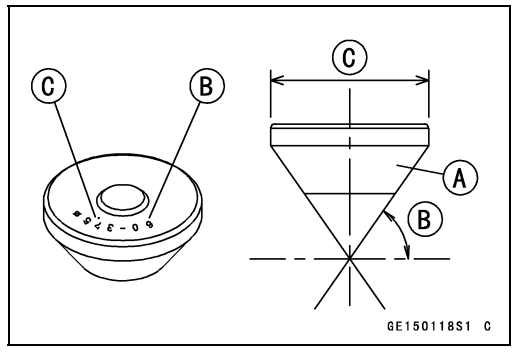

Operating Procedures

- Clean the seat area carefully.
- Coat the seat with machinist's dye.
- Fit a 45° cutter into the holder and slide it into the valve guide.
- Press down lightly on the handle and turn it right or left. Grind the seating surface only until it is smooth.

NOTICE
Do not grind the seat too much. Overgrinding will reduce valve clearance by sinking the valve into the head. If the valve sinks too far into the head, it will be impossible to adjust the clearance, and the cylinder head must be replaced.

Valves

● Measure the outside diameter of the seating surface with a vernier caliper.

★If the outside diameter of the seating surface is too small, repeat the 45° grind until the diameter is within the specified range.

Widened Width [A] of engagement by machining with 45° cutter
Ground Volume [B] by 32° cutter
32° [C]
Correct Width [D]
Ground Volume [E] by 60° cutter
60° [F]

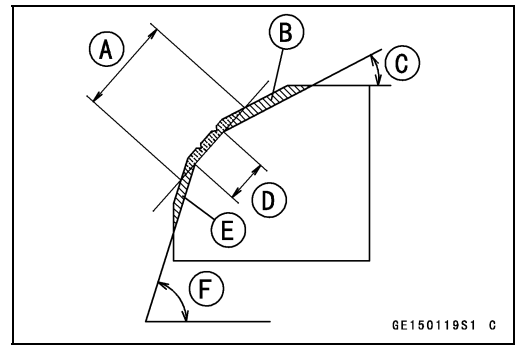

● Measure the outside diameter of the seating surface with a vernier caliper.

★If the outside diameter of the seating surface is too small, repeat the 45° [A] grind until the diameter is within the specified range.

Original Seating Surface [B]

NOTE

○*Remove all pittings of flaws from 45° ground surface.*

○*After grinding with 45° cutter, apply thin coat of machinist's dye to seating surface. This makes seating surface distinct and 32° and 60° grinding operation easier.*

○*When the valve guide is replaced, be sure to grind with 45° cutter for centering and good contact.*

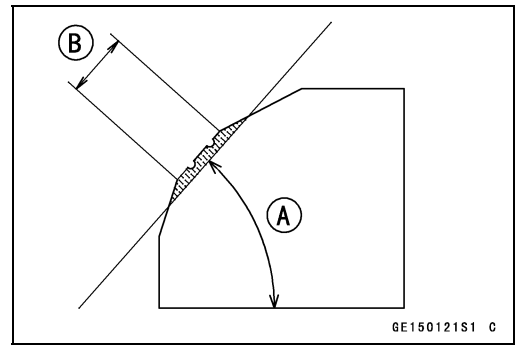

★If the outside diameter [A] of the seating surface is too large, make the 32° [B] grind described below.

★If the outside diameter of the seating surface is within the specified range, measure the seat width as described below.

● Grind the seat at a 32° angle until the seat outside diameter is within the specified range.

○To make the 32° grind, fit a 32° cutter into the holder, and slide it into the valve guide.

○Turn the holder one turn at a time while pressing down very lightly. Check the seat after each turn.

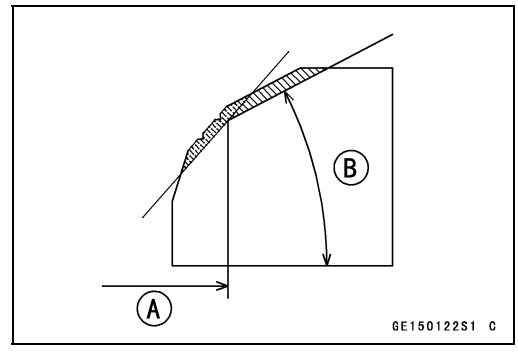

NOTICE

The 32° cutter removes material very quickly. Check the seat outside diameter frequently to prevent overgrinding.

○After making the 32° grind, return to the seat outside diameter measurement step above.

● To measure the seat width, use a vernier caliper to measure the width of the 45° angle portion of the seat at several places around the seat.

★If the seat width is too narrow, repeat the 45° grind until the seat is slightly too wide, and then return to the seat outside diameter measurement step above.

Valves

★If the seat width is too wide, make the 60° [A] grind described below.
★If the seat width is within the specified range, lap the valve to the seat as described below.
● Grind the seat at a 60° angle until the seat width is within the specified range.
○To make the 60° grind, fit 60° cutter into the holder, and slide it into the valve guide.
○Turn the holder, while pressing down lightly.
○After making the 60° grind, return to the seat width measurement step above.
Correct Width [B]

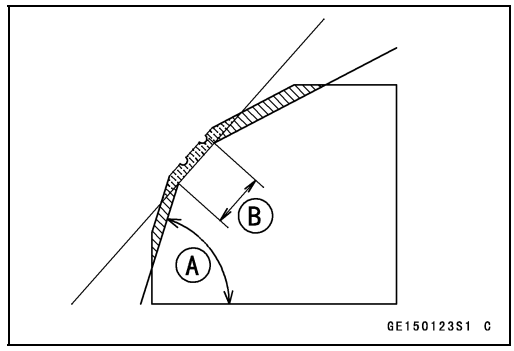

● Lap the valve to the valve seat, once the seat width and outside diameter are within the ranges specified above.
○Put a little coarse grinding compound on the face of the valve in a number of places around the valve head.
○Spin the valve against the seat until the grinding compound produces a smooth, matched surface on both the seat and the valve.
○Repeat the process with a fine grinding compound.
Lapper [A]
Valve Seat [B]
Valve [C]

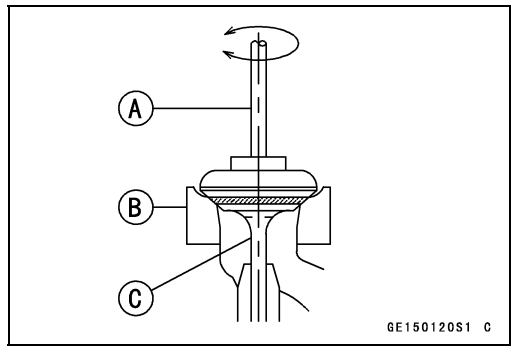

● The seating area should be marked about in the middle of the valve face.
★If the seat area is not in the right place on the valve, check to be sure the valve is the correct part. If it is, it may have been refaced too much; replace it.
● Be sure to remove all grinding compound before assembly.
● When the engine is assembled, be sure to adjust the valve clearance (see Valve Clearance Inspection in the Periodic Maintenance chapter).

Valves

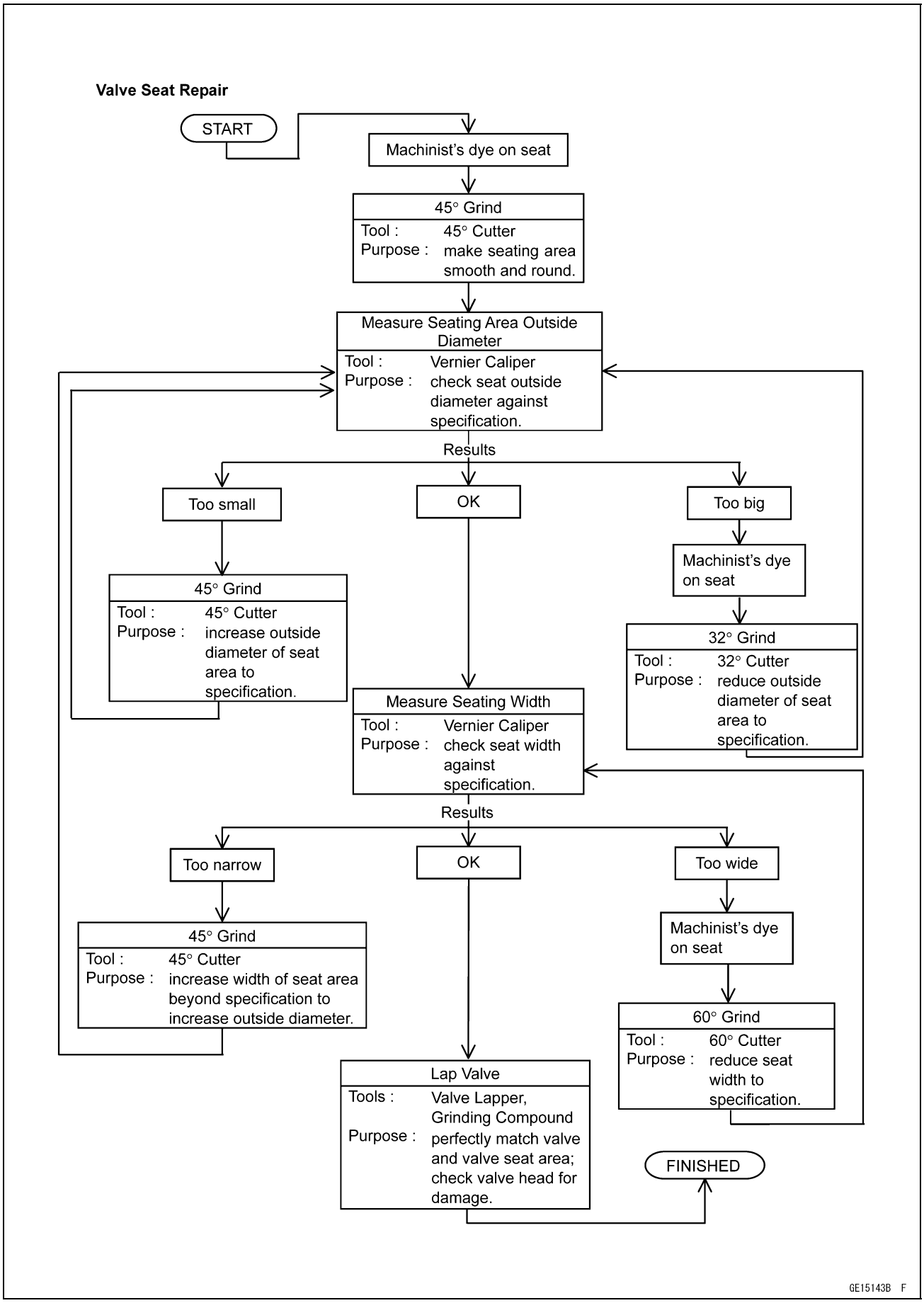
Valve Seat Repair
START
Machinist's dye on seat
45° Grind
Tool : 45° Cutter
Purpose : make seating area smooth and round.
Measure Seating Area Outside Diameter
Tool : Vernier Caliper
Purpose : check seat outside diameter against specification.
Results
Too small
OK
Too big
45° Grind
Tool : 45° Cutter
Purpose : increase outside diameter of seat area to specification.
Machinist's dye on seat
32° Grind
Tool : 32° Cutter
Purpose : reduce outside diameter of seat area to specification.
Measure Seating Width
Tool : Vernier Caliper
Purpose : check seat width against specification.
Results
Too narrow
OK
Too wide
45° Grind
Tool : 45° Cutter
Purpose : increase width of seat area beyond specification to increase outside diameter.
Machinist's dye on seat
60° Grind
Tool : 60° Cutter
Purpose : reduce seat width to specification.
Lap Valve
Tools : Valve Lapper, Grinding Compound
Purpose : perfectly match valve and valve seat area; check valve head for damage.
FINISHED
GE15143B F

Throttle Body Assy Holder

Throttle Body Assy Holder Removal

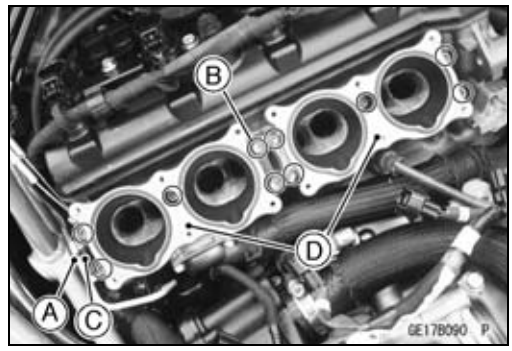

- Remove:
  Throttle Body Assy (see Throttle Body Assy Removal in the Fuel System (DFI) chapter)
  Clamp [A]
  Throttle Body Assy Holder Bolts [B]
  Bracket [C]
  Throttle Body Assy Holders [D]

Throttle Body Assy Holder Installation

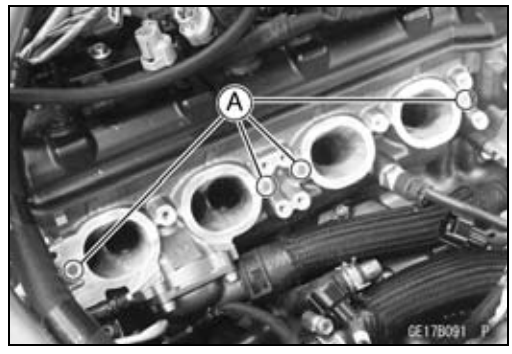

- Install the dowel pins [A].

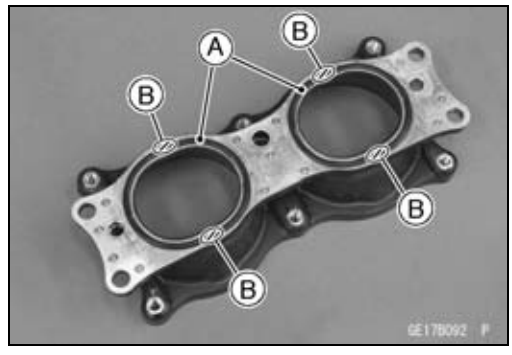

- Replace the O-rings [A] with new ones.
- Apply liquid gasket to any two positions [B] of the O-rings to prevent it from coming off, and install them.

  Sealant - Liquid Gasket, TB1211F: 92104-0004

- Install:
  Throttle Body Assy Holders
  Bracket [A]
- Tighten the throttle body assy holder bolts following the specified tightening sequence [1 ~ 5].

  Torque - Throttle Body Assy Holder Bolts: 10 N·m (1.0 kgf·m, 89 in·lb)

- Wipe of any excess liquid gasket.
- Install the removed parts (see appropriate chapters).

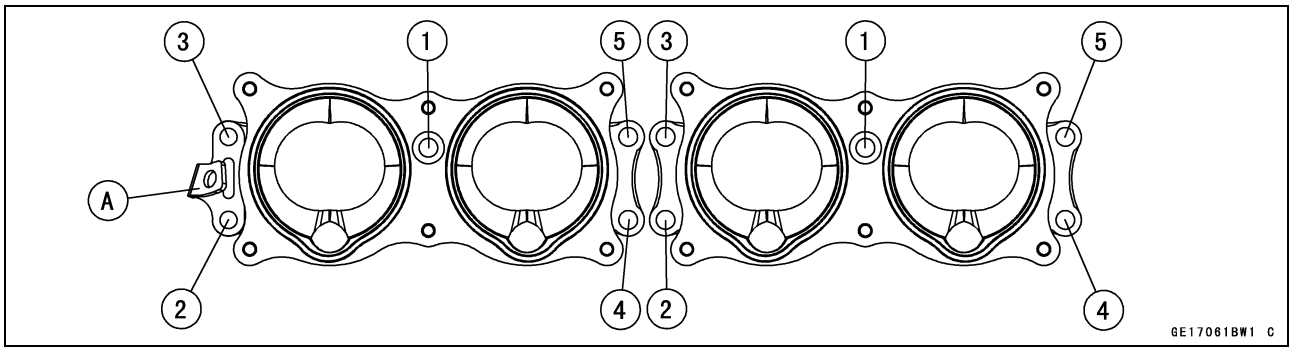

Muffler

⚠ WARNING

The muffler can become extremely hot during normal operation and cause severe burns. Do not remove the muffler while it is hot.

Muffler Body Removal

- Remove the bolt [A].
- Remove the muffler body cover [B] forward.

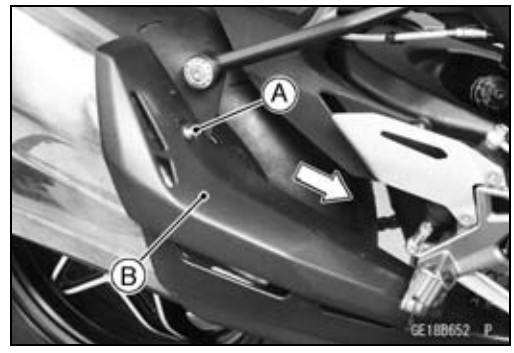

- Remove the bolts [A].
- Remove the exhaust pipe cover [B] backward.

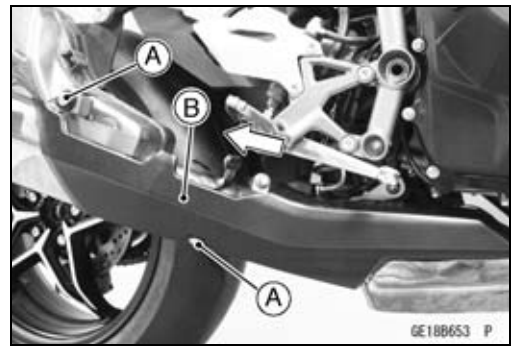

- Loosen the muffler body clamp bolt [A].
- Remove the muffler body mounting bolt [B], and nut.
- Remove the muffler body [C] backward.

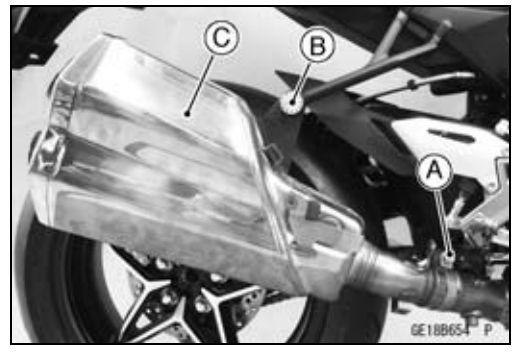

Muffler

Muffler Body Installation

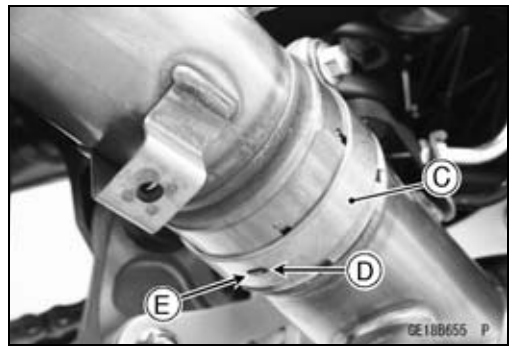

- Replace the muffler body gasket [A] with a new one.
- Install the muffler body gasket to the exhaust pipe [B] until it is bottomed so that the chamfer side faces exhaust pipe.
- Install the muffler body clamp [C] as shown.

○Insert the projection [D] into the slot [E].

- Install the muffler body.
- Tighten the muffler body mounting bolt [F] with collar [G] and muffler body clamp bolt [H].

Inside [I]
Outside [J]

Torque - Muffler Body Mounting Bolt: 25 N·m (2.5 kgf·m, 18 ft·lb)
Muffler Body Clamp Bolt: 17 N·m (1.7 kgf·m, 13 ft·lb)

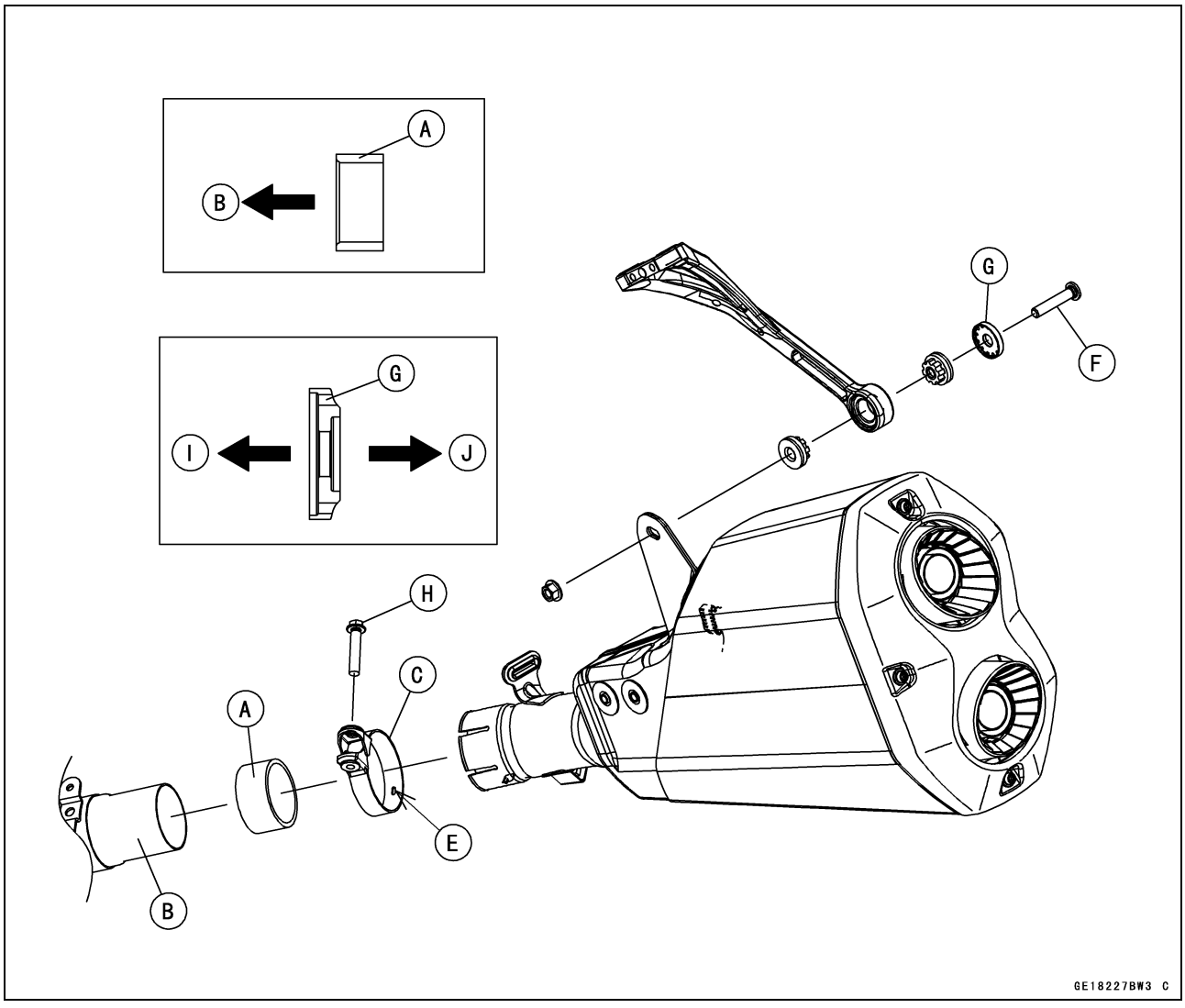

Muffler

- Thoroughly warm up the engine, wait until the engine cools down, retighten all the bolts.
- Install the pads [A] to the exhaust pipe cover and muffler body cover as shown.

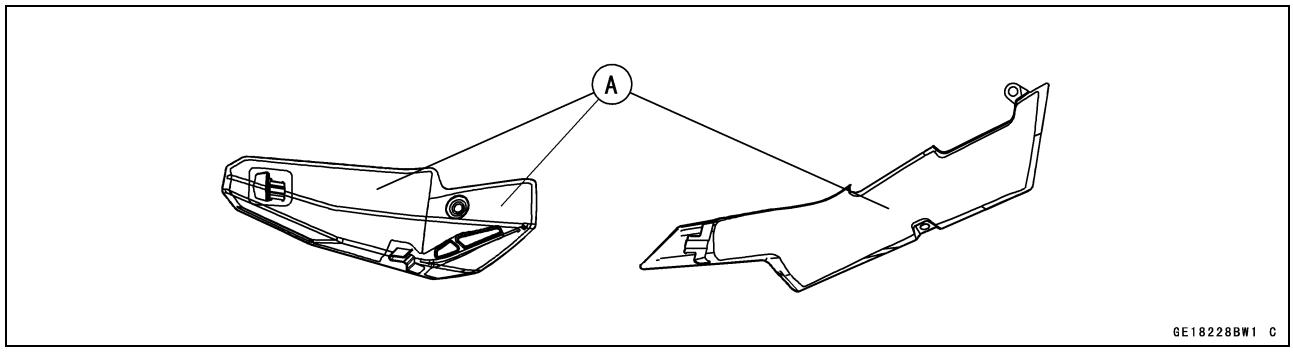

Muffler

- Install the dampers [A ~ C] as shown.
  Front [D]
- Install:
  Dampers [E]
  Collars [F]
- Insert the tab [G] of the exhaust pipe cover into the hole.
- Tighten the bolts [H].
- Insert the tab [I] of the muffler body cover into the hole.
- Fit the slot [J] of the muffler body cover onto the tab.
- Tighten the bolt [K].

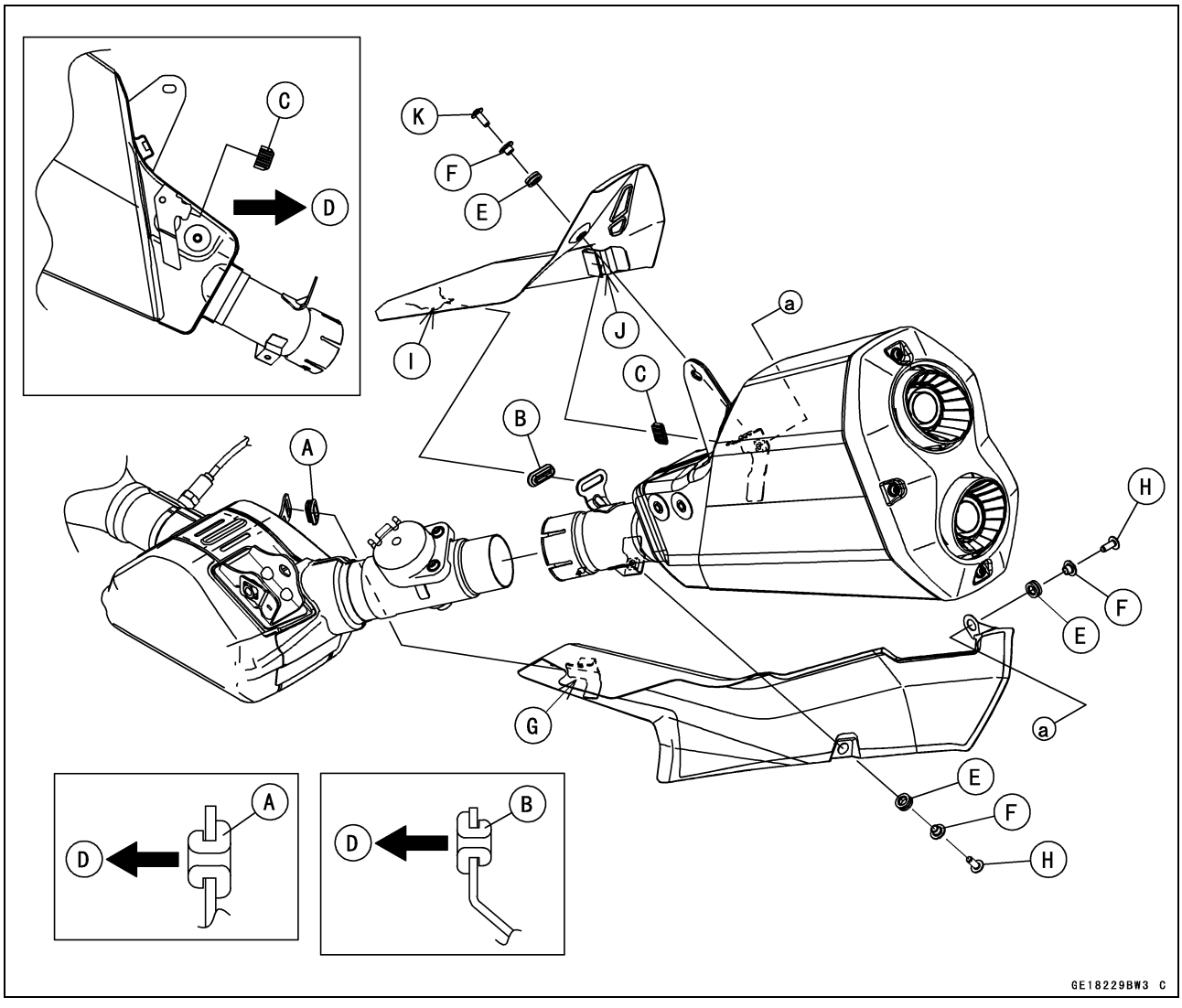

Exhaust Pipe Removal

- Remove:
  Radiator (see Radiator and Radiator Fan Removal in the Cooling System chapter)
  Fuel Tank (see Fuel Tank Removal in the Fuel System (DFI) chapter)
  Muffler Body (see Muffler Body Removal)
- Disconnect the oxygen sensor connect [A].

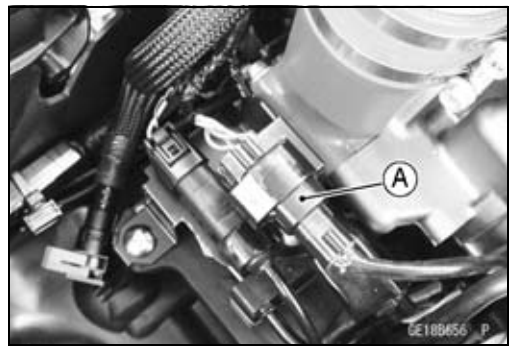

Muffler

- Free the oxygen sensor lead from the clamp [A].

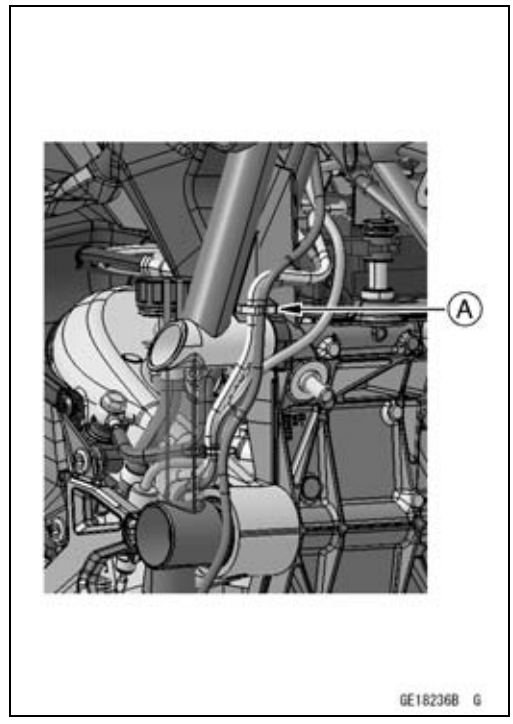

- Free the oxygen sensor lead [A] from the bracket [B].

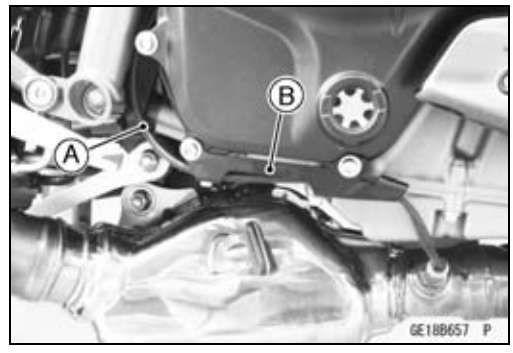

- Remove the footpeg bracket bolts [A].
- Move the footpeg bracket backward.

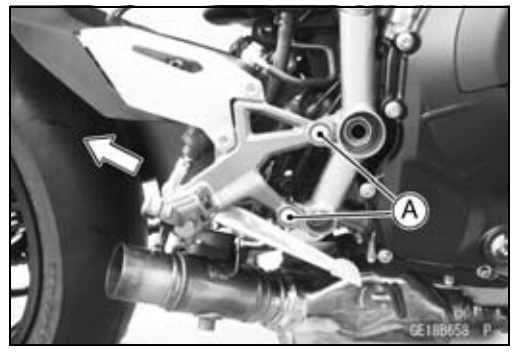

- Slide the dust covers [A].
- Loosen the locknuts [B], and turn the adjuster [C] to give the cable plenty of play.

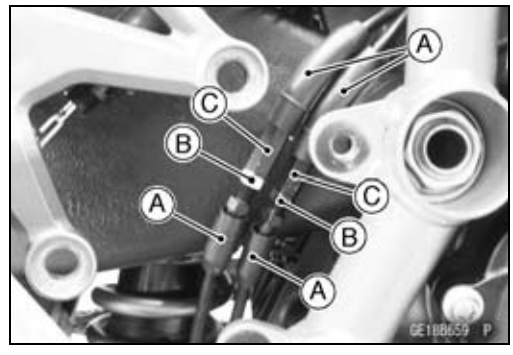

Muffler

- Remove:
  Exhaust Butterfly Valve Cover Bolts [A]
  Washers
  Exhaust Butterfly Valve Cover [B]

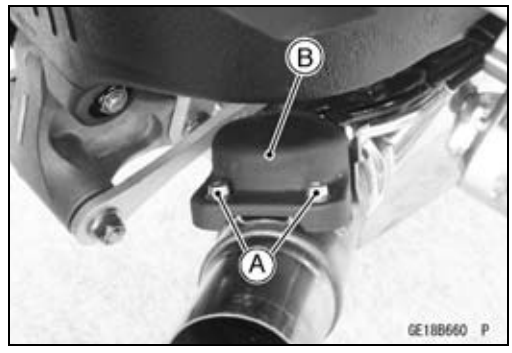

- Loosen the exhaust butterfly valve cable locknuts [A].
- Disconnect the exhaust butterfly valve cable lower ends [B].

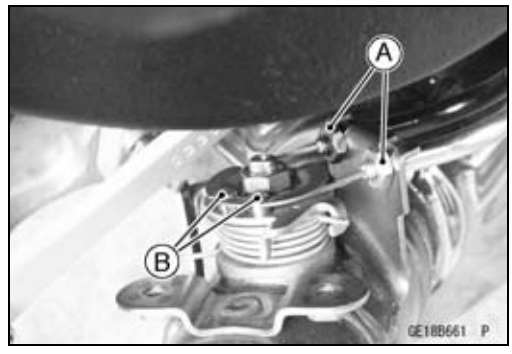

- Remove:
  Exhaust Pipe Mounting Nut [A]
  Washer [B]
  Exhaust Pipe Mounting Bolt and Washer

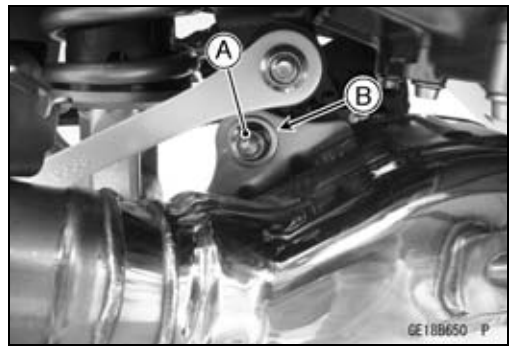

- Remove:
  Exhaust Pipe Holder Nuts [A]
  Exhaust Pipe

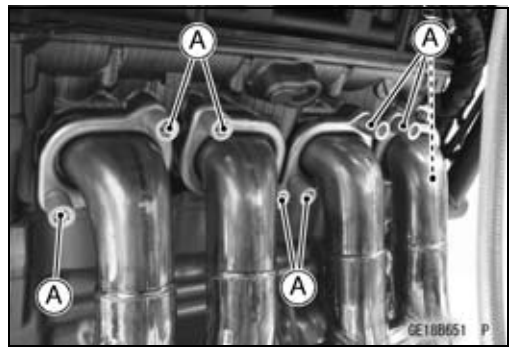

Muffler

Exhaust Pipe Installation

- Replace the exhaust pipe gaskets [A] and exhaust pipe mounting nut [B] with new ones.
- Apply grease to the exhaust pipe gasket, and install them to engine.
- Install the exhaust pipe [C].
- Tighten the exhaust pipe holder nuts [D] following the tightening sequence [1 ~ 8].
  Right Side [E]
  Left Side [F]

Torque - Exhaust Pipe Holder Nuts: 17 N·m (1.7 kgf·m, 13 ft·lb)

- Install the exhaust pipe mounting bolt [G] with washers [H].
- Tighten:

Torque - Exhaust Pipe Mounting Bolt: 34 N·m (3.5 kgf·m, 25 ft·lb)

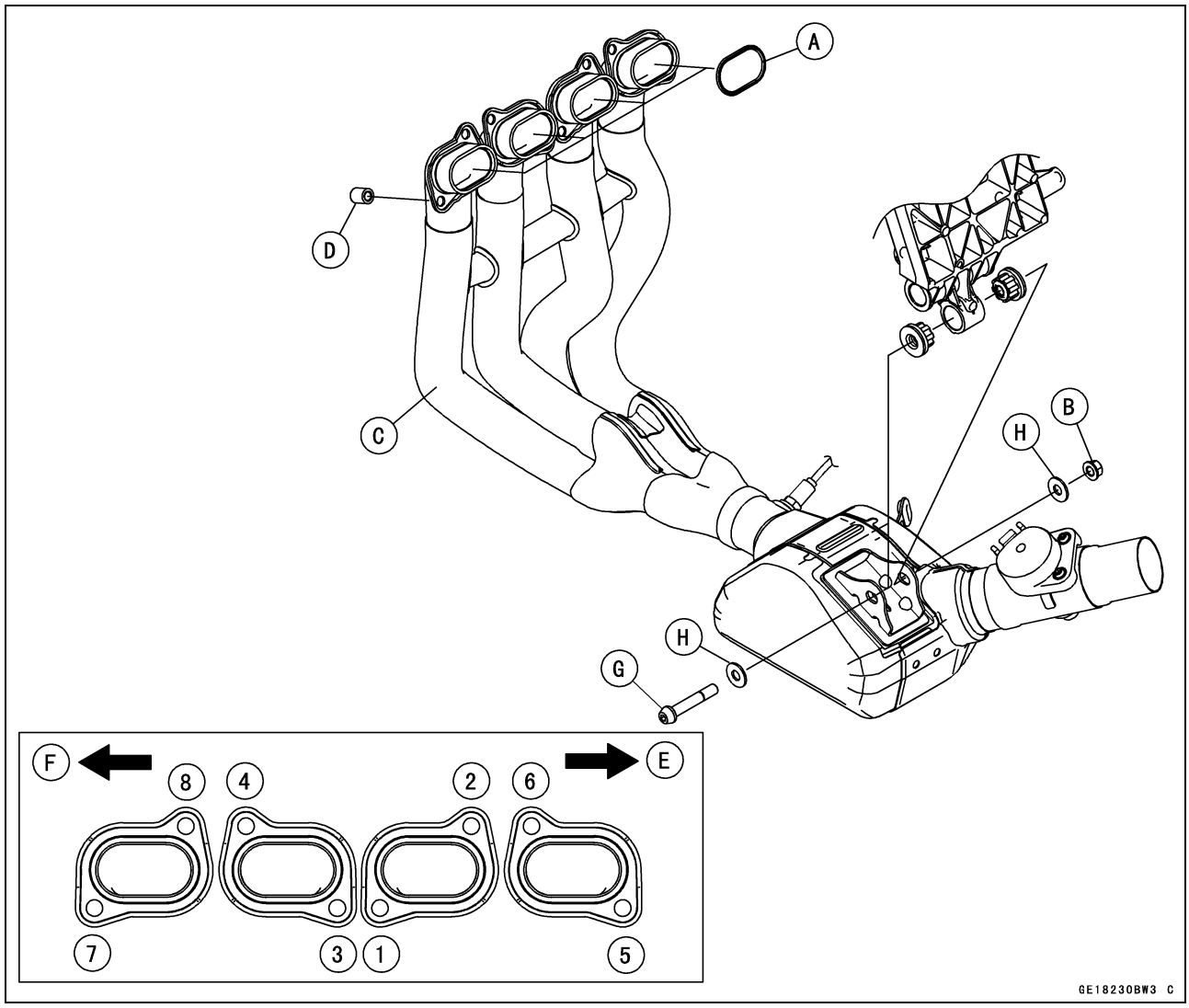

- Install the removed parts (see appropriate chapters).
- Thoroughly warm up the engine, wait until the engine cools down, retighten all the bolts and nuts.

Muffler

Exhaust Butterfly Valve Cable Removal

- Remove:
  Fuel Tank (see Fuel Tank Removal in the Fuel System (DFI) chapter)
  Exhaust Pipe Cover and Muffler Body Cover (see Muffler Body Removal)
  Footpeg Bracket Bolts [A]
- Move the footpeg bracket backward.



- Slide the dust covers [A].
- Loosen the locknuts [B], and turn the adjusters [C] to give the cable plenty of play.

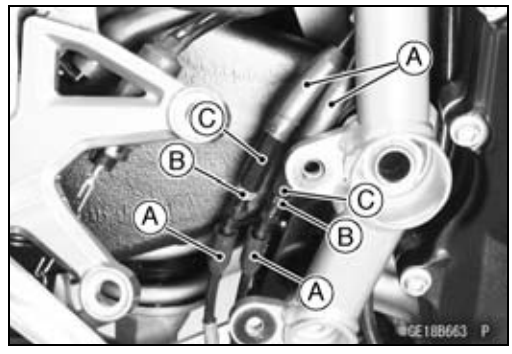

- Remove:
  Exhaust Butterfly Valve Cover Bolts [A]
  Washers
  Exhaust Butterfly Valve Cover [B]

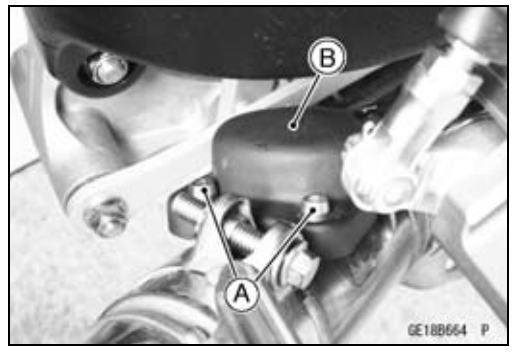

- Loosen the exhaust butterfly valve cable locknuts [A].
- Disconnect the exhaust butterfly valve cable lower ends [B].

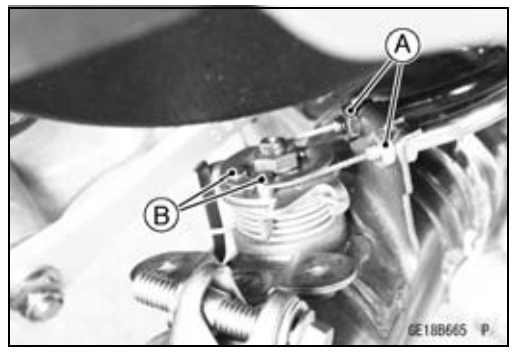

Muffler

- Free the exhaust butterfly valve cables from the clamps [A].

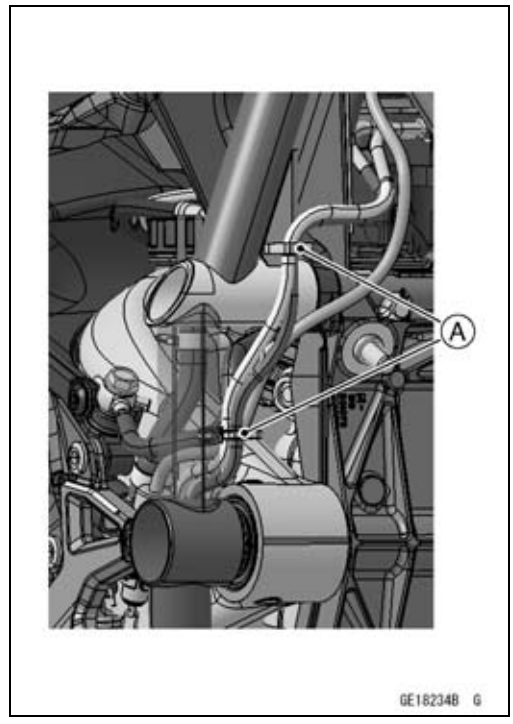

- Remove the oxygen sensor connector [A] from the bracket.
- Disconnect the rear wheel rotation sensor connector [B].
- Remove the exhaust butterfly valve actuator mounting screw [C].

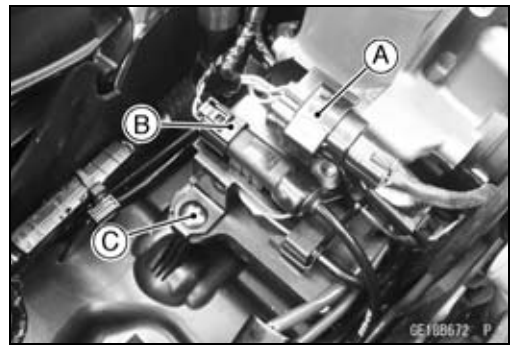

- Remove the clamp [A].
- Disconnect the exhaust butterfly valve cable upper ends [B].
- Remove the exhaust butterfly valve cables.

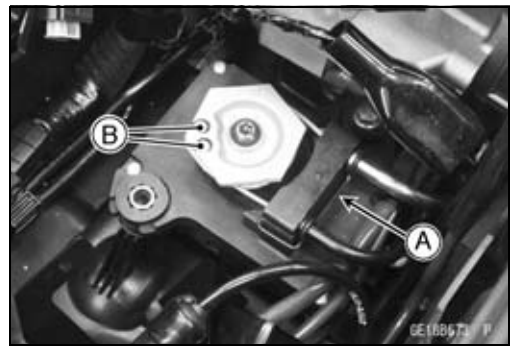

Exhaust Butterfly Valve Cable Installation

- Before installing the exhaust butterfly valve cables, confirm that the exhaust valve actuator pulley [A] is in the original position as shown.

○The pulley edge [B] and housing screw [C] are on the same line. This position is original position of the pulley.

★If the pulley is not in the original position, adjust it (see Exhaust Butterfly Valve Actuator Adjustment).

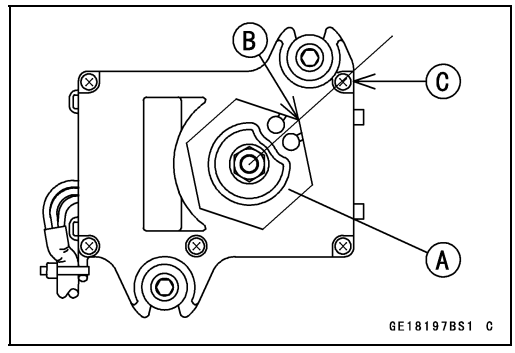

NOTICE
Do not attempt to move the pulley by hand or using a tool as internal actuator damage will occur.

Muffler

- Install the close cable (black) [A], and then install the open cable (silver) [B] to the exhaust valve actuator pulley.
- Install the clamp [C].

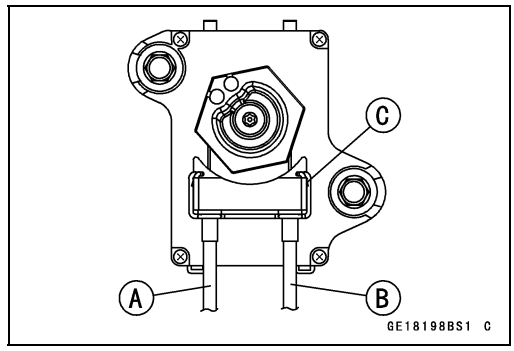

- Install the exhaust butterfly valve cables to the muffler body as shown.
  Open Cable (Silver) [A]
  Close Cable (Black) [B]
- Tighten:

Torque - Exhaust Buttery Valve Cable Locknuts: 5.5 N·m (0.56 kgf·m, 49 in·lb)

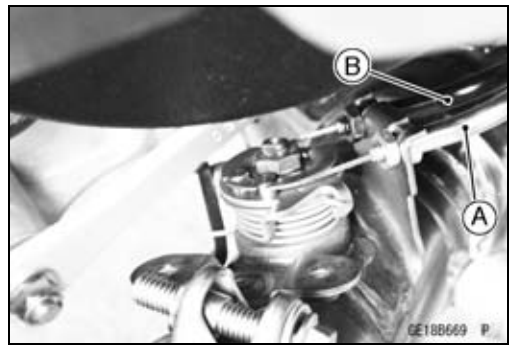

- Adjust the open cable (silver) first. Loosen the locknut [A] and turn the adjuster [B] until there is no play in the cable.
- Tighten the open cable locknut.
- Adjust the close cable (black). Loosen the locknut [C] and turn the adjuster [D] until there is no play in the cable.
- Turn the adjuster of the close cable clockwise by 1/2 to 1 rotation.
- Tighten the close cable locknut.

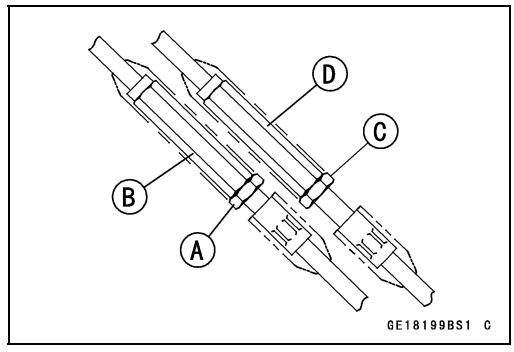

NOTICE

To keep the correct exhaust butterfly valve position, adjust the open cable first. Adjust the cables only until there is no play. If the cables are adjusted any further, the exhaust butterfly valve actuator will not operate correctly.

Muffler

- After adjusting the cables, turn the ignition switch on and make sure that the pulley turns clockwise, then counter-clockwise and then returns slightly clockwise as shown.

NOTE

○*The stop position [A] of the pulley is changed by the cables tension and the closed position of the exhaust butterfly valve.*

★If the pulley does not move smoothly, adjust the cables again.

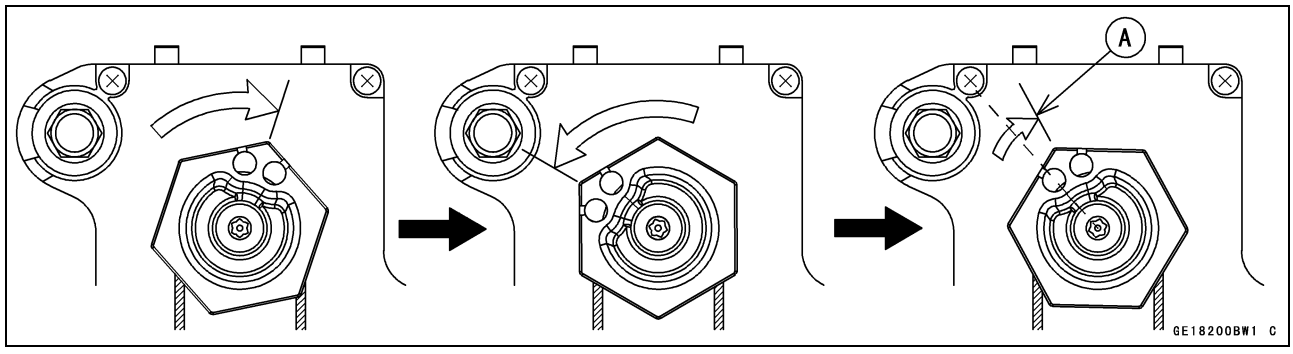

- Install the bracket [A] so that the damper hole [B] fit the bolt head.
- Tighten:

Torque - Exhaust Butterfly Valve Actuator Mounting Screw: 1.2 N·m (0.12 kgf·m, 11 in·lb)

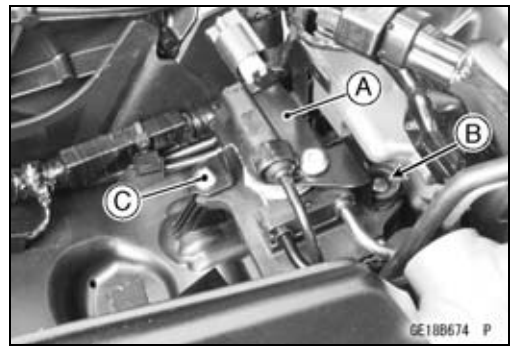

- Install:
  Exhaust Butterfly Valve Cover [A]
  Washers [B]
- Tighten:

Torque - Exhaust Butterfly Valve Cover Bolts [C]: 6.0 N·m (0.61 kgf·m, 53 in·lb)

- Install the removed parts (see appropriate chapters).

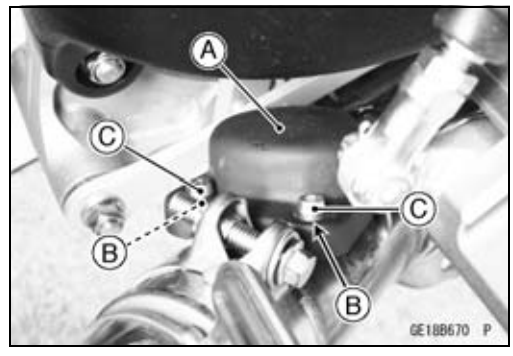

Muffler

Exhaust Butterfly Valve Actuator Removal

NOTICE
Never drop the exhaust butterfly valve actuator especially on a hard surface. Such a shock to the actuator can damage it.

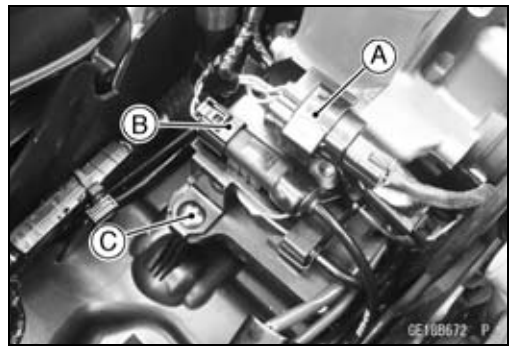

- Remove the fuel tank (see Fuel Tank Removal in the Fuel System (DFI) chapter).
- Loosen the exhaust butterfly valve cables (see Exhaust Butterfly Valve Cable Removal).
- Remove the oxygen sensor connector [A] from the bracket.
- Disconnect the rear wheel rotation sensor connector [B].
- Remove the exhaust butterfly valve actuator mounting screw [C].

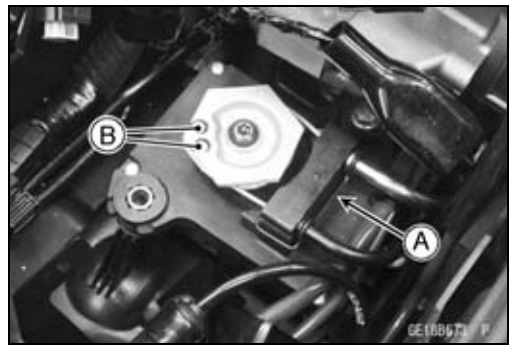

- Remove the clamp [A].
- Disconnect the exhaust butterfly valve cable upper ends [B].

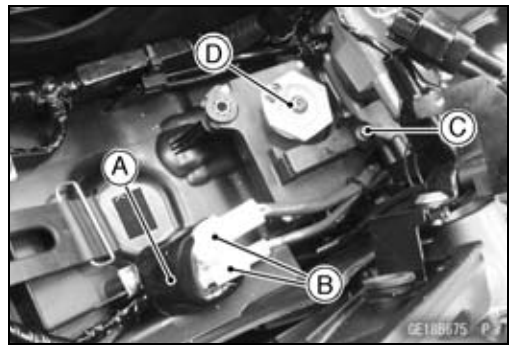

- Slide the dust cover [A].
- Disconnect the exhaust butterfly valve actuator lead connectors [B].
- Remove:
  Exhaust Butterfly Valve Actuator Mounting Bolt [C]
  Washers
  Exhaust Butterfly Valve Actuator [D]
  Collar

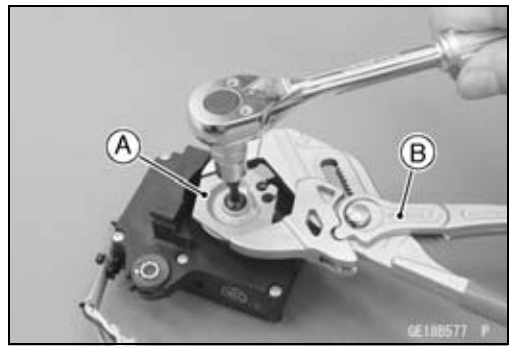

- When replacing the pulley, note the following.
- Remove the pulley bolt while holding the pulley [A] with the suitable tool [B].

NOTICE
If the pulley bolt is removed without holding, the actuator damage will occur.

- Remove the pulley from the actuator.

Muffler

Exhaust Butterfly Valve Actuator Installation

- When replacing the pulley, note the following.
- Install the pulley [A] on the actuator so that the holes side [B] aligns with the groove [C].

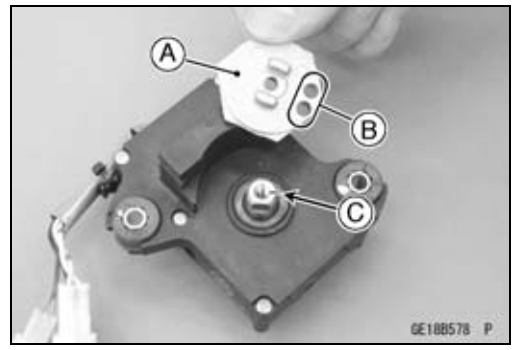

- Tighten the pulley bolt [A] while holding the pulley [B] with the suitable tool [C].

Torque - Exhaust Butterfly Valve Actuator Pulley Bolt: 5.0 N·m (0.51 kgf·m, 44 in·lb)

NOTICE
If the pulley bolt is tightened without holding, the actuator damage will occur.

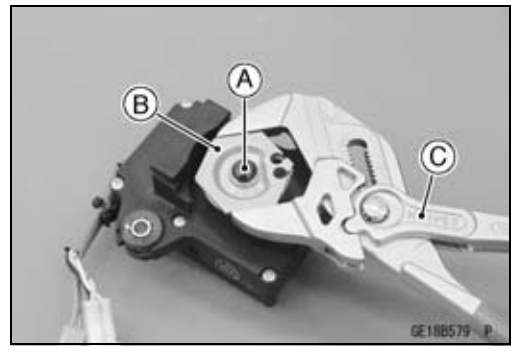

- Install:
  Washers [A]
  Collar [B]
  Exhaust Butterfly Valve Actuator [C]
- Tighten:

Torque - Exhaust Butterfly Valve Actuator Mounting Bolt [D]: 1.0 N·m (0.10 kgf·m, 8.9 in·lb)

- Install the exhaust butterfly valve cables (see Exhaust Butterfly Valve Cable Installation).

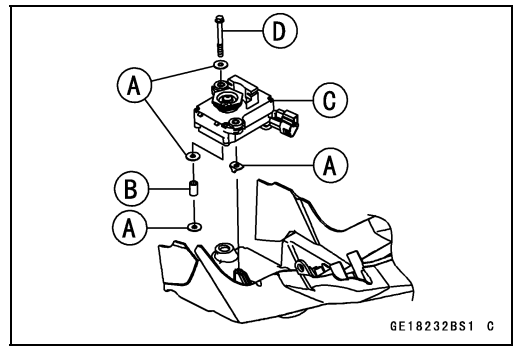

Muffler

Exhaust Butterfly Valve Actuator Adjustment

Pulley Position Electrically Adjustment

- Turn the ignition switch off.
- Disconnect the exhaust butterfly valve actuator connectors.
- Connect the exhaust butterfly valve actuator connector (2 pins) to the battery to turn the pulley as follows.
  Connection for counterclockwise [A]
  Connection for clockwise [B]
- Adjust the pulley position until it returns to the original position.

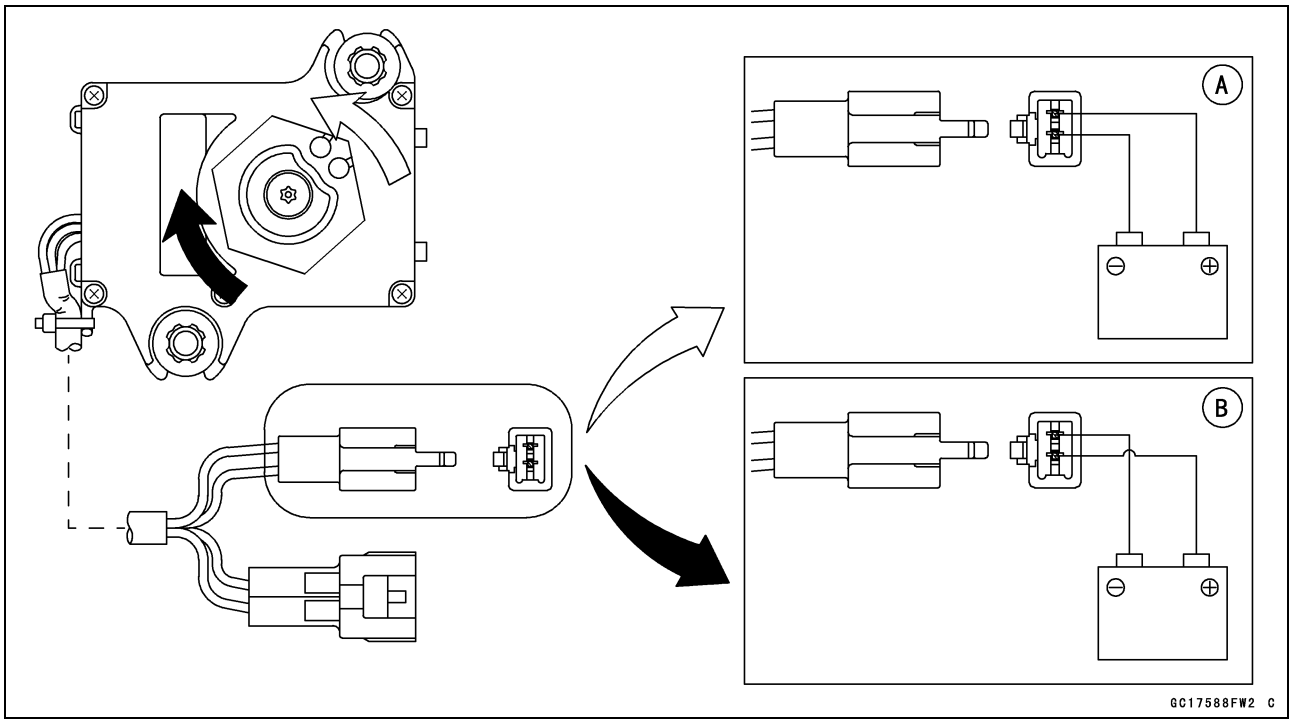

- Confirm that the exhaust valve actuator pulley [A] is in the original position as shown.

○The pulley edge [B] and housing screw [C] are on the same line. This position is original position of the pulley.

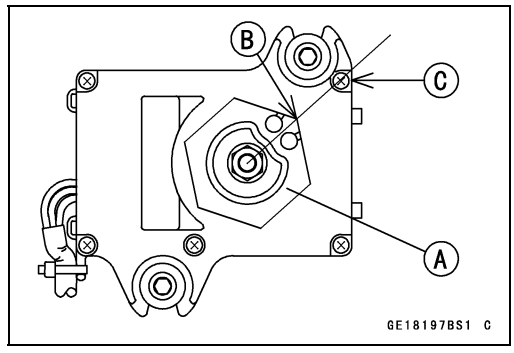

Clutch

Table of Contents

Exploded View 6-2
Specifications 6-4
Special Tools and Sealant 6-5
Clutch Lever 6-6
  Clutch Lever Removal/Installation 6-6
  Clutch Lever Position Adjustment 6-8
Clutch Master Cylinder 6-9
  Clutch Master Cylinder Removal 6-9
  Clutch Master Cylinder Installation 6-9
  Clutch Master Cylinder Disassembly/Assembly 6-10
  Clutch Master Cylinder Inspection 6-10
Clutch Slave Cylinder 6-11
  Clutch Slave Cylinder Removal 6-11
  Clutch Slave Cylinder Installation 6-11
Clutch Fluid 6-13
  Clutch Fluid Level Inspection 6-13
  Clutch Fluid Change 6-13
  Bleeding the Clutch Line 6-13
  Clutch Hose Removal/Installation 6-15
  Clutch Hose Inspection 6-15
Clutch Cover 6-16
  Clutch Cover Removal 6-16
  Clutch Cover Installation 6-16
  Clutch Cover Disassembly 6-16
  Clutch Cover Assembly 6-17
Clutch 6-18
  Clutch Removal 6-18
  Clutch Installation 6-19
  Clutch Plate Assembly Length Measurement 6-23
  Clutch Plate Assembly Adjustment 6-23
  Clutch Plate, Wear, Damage Inspection 6-24
  Clutch Plate Warp Inspection 6-24
  Clutch Housing Finger Inspection 6-24
  Clutch Housing Spline Inspection 6-24
  Clutch Pressure Plate and Clutch Hub Inspection 6-25
  Clutch Spring Inspection 6-25

Exploded View

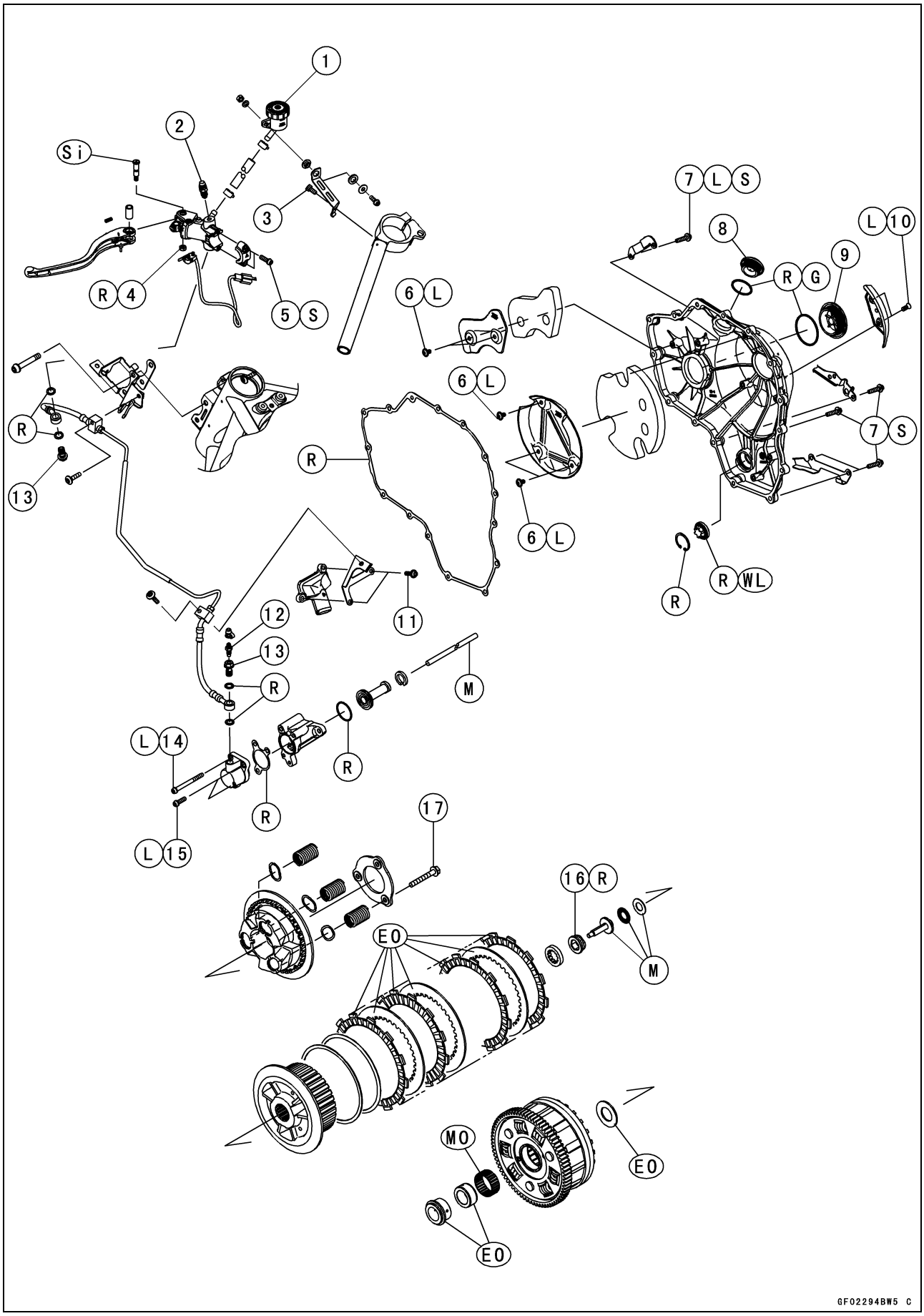

Exploded View

No.	Fastener	N·m	kgf·m	ft·lb	Remarks
1	Clutch Reservoir Cap (for reference)	1.5	0.15	13 in·lb	
2	Clutch Master Cylinder Bleed Valve	5.5	0.56	49 in·lb	
3	Clutch Reservoir Bracket Bolt	6.9	0.70	61 in·lb	
4	Clutch Lever Pivot Bolt Locknut	6.0	0.61	53 in·lb	R
5	Clutch Master Cylinder Clamp Bolts	9.0	0.92	80 in·lb	S
6	Clutch Cover Damper Plate Bolts	10	1.0	89 in·lb	L
7	Clutch Cover Bolts	12	1.2	106 in·lb	L (1), S
8	Oil Filler Plug	10	1.0	89 in·lb	
9	Crankshaft Timing Plug	25	2.5	18	
10	Clutch Outer Cover Bolts	5.0	0.51	44 in·lb	L
11	Water Hose Fitting Cover Bolts	10	1.0	89 in·lb	
12	Clutch Slave Cylinder Bleed Valve	7.9	0.81	70 in·lb	
13	Clutch Hose Banjo Bolts	25	2.5	18	
14	Clutch Slave Cylinder Mounting Bolt (L = 65 mm)	10	1.0	89 in·lb	L
15	Clutch Slave Cylinder Mounting Bolts (L = 20 mm)	10	1.0	89 in·lb	L
16	Clutch Hub Nut	130	13.3	95.9	R
17	Clutch Stopper Bolts	10	1.0	89 in·lb	

EO: Apply engine oil.
G: Apply grease.
L: Apply a non-permanent locking agent.
M: Apply molybdenum disulfide grease.
MO: Apply molybdenum disulfide oil solution.
(mixture of the engine oil and molybdenum disulfide grease in a weight ratio 10:1)
R: Replacement Parts
S: Follow the specified tightening sequence.
Si: Apply silicone grease.
WL: Apply soap and water solution or rubber lubricant.

6-4 CLUTCH

Specifications

Item	Standard	Service Limit
Clutch Lever		
Clutch Lever Position	Adjustable type (to suit rider)	– – –
Clutch Lever Free Play	Non-adjustable	– – –
Clutch Fluid		
Grade	DOT4	– – –
Clutch		
Spring Plate Free Play	(Usable Range) 0.05 ~ 0.70 mm (0.002 ~ 0.028 in.)	– – –
Clutch Plate Assembly Length	50.4 ~ 51.4 mm (1.98 ~ 2.02 in.)	– – –
Friction Plate Thickness	3.22 ~ 3.38 mm (0.127 ~ 0.133 in.)	2.9 mm (0.11 in.)
Friction and Steel Plate Warp	0.15 mm (0.0059 in.) or less	0.3 mm (0.01 in.)

Special Tools and Sealant

Inside Circlip Pliers:
57001-143

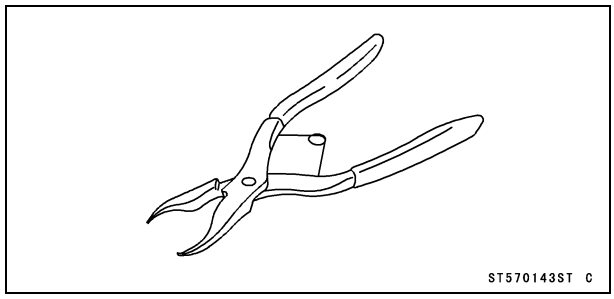

Clutch Holder:
57001-1243

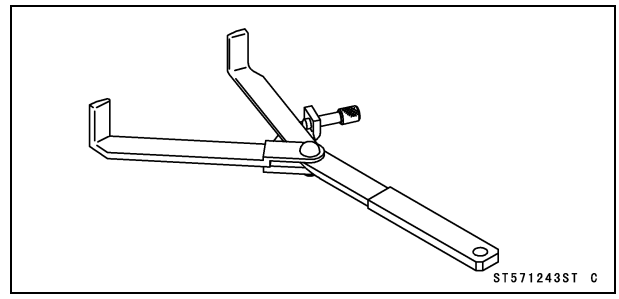

Bearing Driver Set:
57001-1129

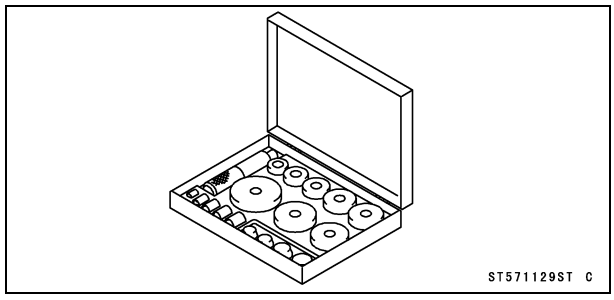

Liquid Gasket, TB1211F:
92104-0004

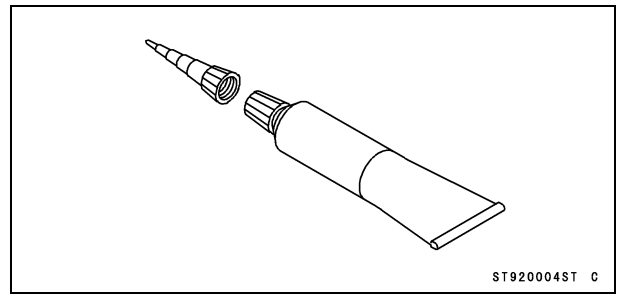

Clutch Lever

Clutch Lever Removal/Installation

⚠ WARNING

If the starter lockout switch pin has been damaged the starter lockout system will not work properly. This allows the motorcycle to be started in gear with the clutch lever released (clutch engaged), creating sudden forward movement that can result in an accident or injury. Check that the starter lockout switch operates properly when installing the clutch lever.

- Using a thin flat tip screwdriver [A], remove the starter lockout switch [B].

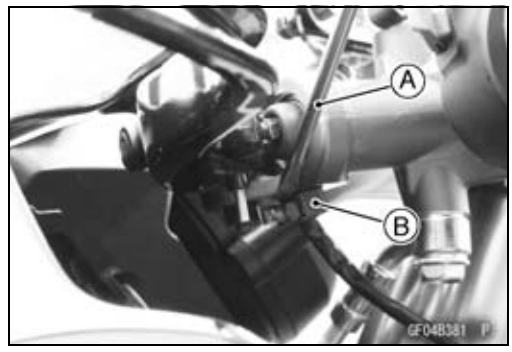

- Remove:
  Clutch Lever Pivot Bolt Locknut [A]
  Clutch Lever Pivot Bolt [B]
  Clutch Lever Assembly [C]

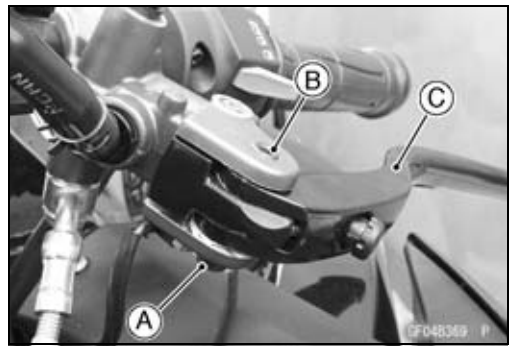

- Press the lever collar [A] with the bearing driver set [B] from the lower side of the lever.
  Crimping Point [C]
  No Crimping [D]

  Special Tool - Bearing Driver Set: 57001-1129

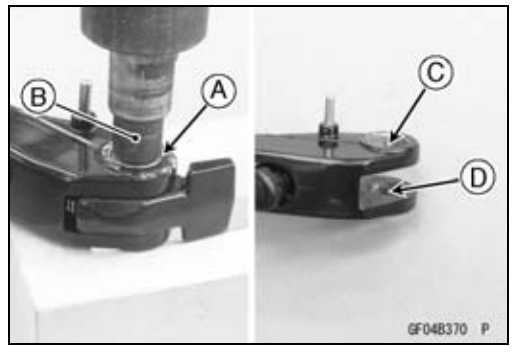

- Remove:
  Lever Collar [A]
  Knocker [B] with Push Rod Assembly
  Lever Spring [C]
  Clutch Lever [D]

NOTE

○*Be careful not to pop out the lever spring when removing the lever collar.*

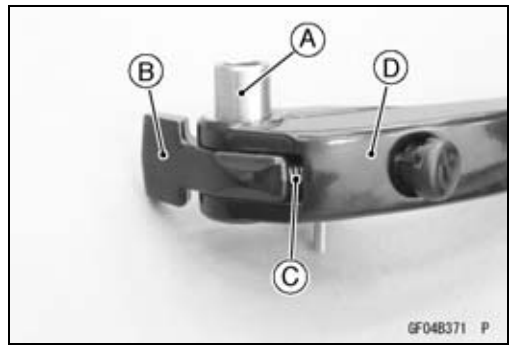

Clutch Lever

NOTICE

Do not adjust the adjuster [A]. That has a bad affect the clutch operation. If turn the adjuster, the clutch master cylinder assembly must be replaced.

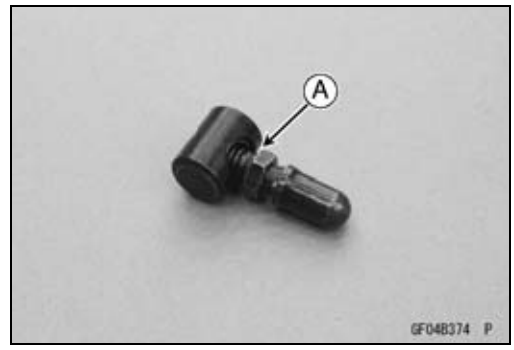

- Install:
  Lever Spring [A]
  Push Rod Assembly [B]
  Knocker [C]

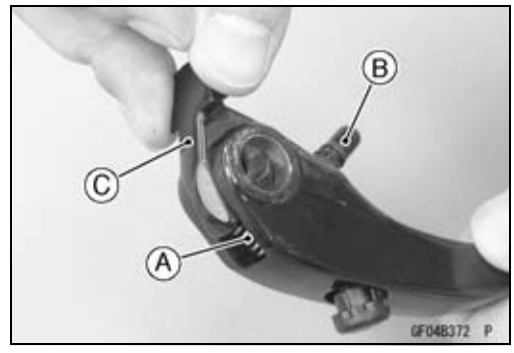

- Press the lever collar [A] with the bearing driver set [B] from the upper side of the lever.

○Install the collar so that the end of the collar is flush with the end of the hole.

Special Tool - Bearing Driver Set: 57001-1129

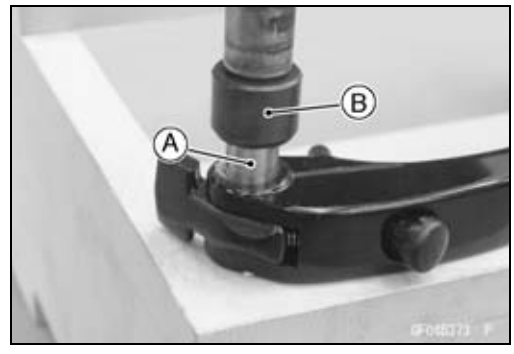

- Insert the push rod [A] of the clutch lever to the hole [B] of the master cylinder.
- Check that the push rod is inserted correctly.

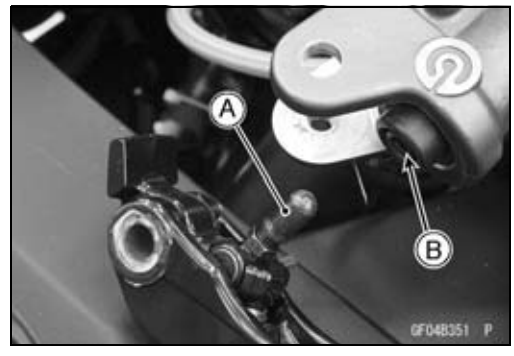

- Apply silicone grease to the sliding surface of the clutch lever pivot bolt [A].
- Replace the clutch lever pivot bolt locknut [B] with a new one.
- Tighten the clutch lever pivot bolt and clutch lever pivot bolt locknut.

Torque - Clutch Lever Pivot Bolt Locknut: 6.0 N·m (0.61 kgf·m, 53 in·lb)

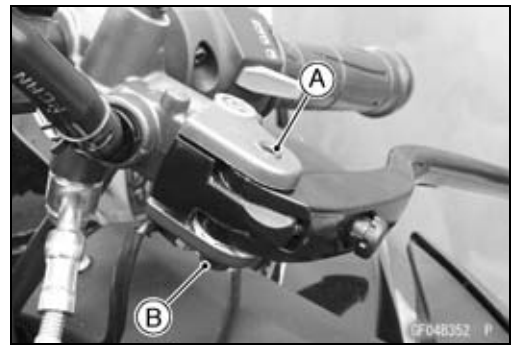

- Install the starter lockout switch.
- Confirm the starter lockout switch is held after installing it. Replace the starter lockout switch that its fitting deteriorated.
- Check that the pin of the starter lockout switch moves smoothly.

Clutch Lever

Clutch Lever Position Adjustment

The clutch lever position can be adjusted to suit the operator's hand.

- Push the lever forward, turn the adjuster [A] and choose a suitable lever position.

Adjuster	Turn in	←	→	Turn out
Lever Position	Far	←	→	Near



Clutch Master Cylinder

Clutch Master Cylinder Removal

- Remove the upper fairing (see Upper Fairing Removal in the Frame chapter).
- Drain the clutch fluid from the reservoir (see Clutch Fluid Change in the Periodic Maintenance chapter).
- Open the clamps [A] and clear the starter lockout switch lead [B].

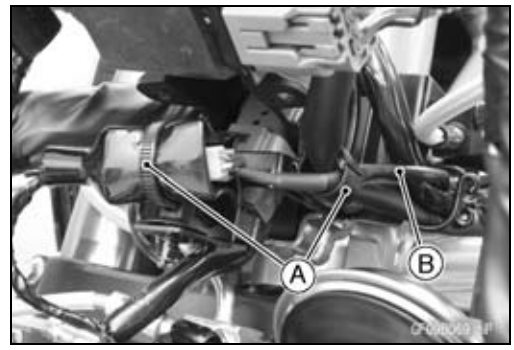

- Slide the dust cover [A], and disconnect the starter lockout switch lead connector [B].

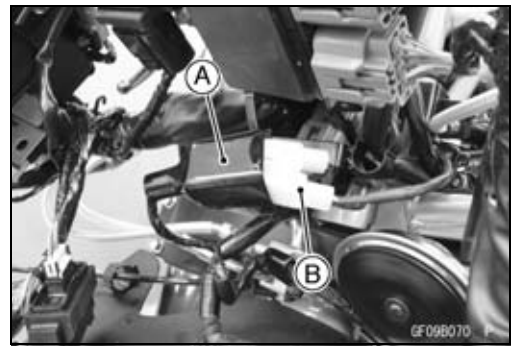

- Remove:
  Clutch Reservoir Bolt [A]
  Clutch Reservoir Nut
  Dumper
  Collar
  Washers
- Remove the banjo bolt [B] to disconnect the clutch hose from the master cylinder.
- Remove the clamp bolts [C], and take off the master cylinder as an assembly with the clutch reservoir, clutch lever and starter lockout switch installed.

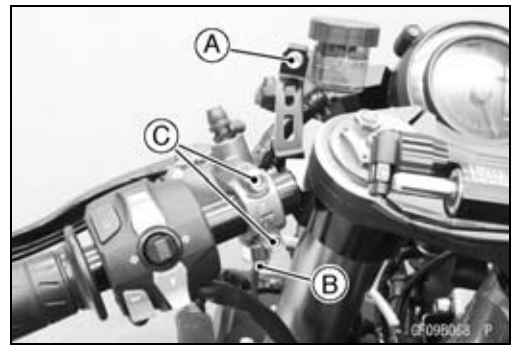

NOTICE
Clutch fluid quickly damages painted surface; any spilled fluid should be completely washed away immediately.

Clutch Master Cylinder Installation

- Install the master cylinder clamp [A] with the arrow mark [B] upward.

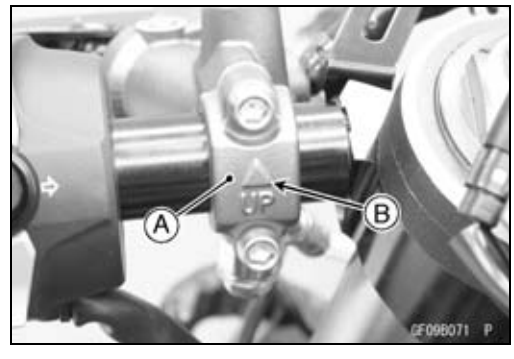

Clutch Master Cylinder

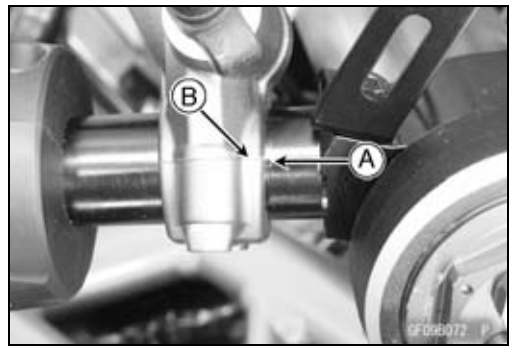

- Align the punch mark [A] on the handlebar with the mating surface [B] of the master cylinder clamp.
- Tighten the upper clamp bolt first, and then the lower clamp bolt. There will be a gap at the lower part of the clamp after tightening.

Torque - Clutch Master Cylinder Clamp Bolts: 9.0 N·m (0.92 kgf·m, 80 in·lb)

- Replace the washers that are on each side of the hose fitting with new ones.
- Install the clutch hose (see Cable, Wire, and Hose Routing section in the Appendix chapter).
- Tighten:

Torque - Clutch Hose Banjo Bolt: 25 N·m (2.5 kgf·m, 18 ft·lb)

- Replenish the clutch fluid into the reservoir and bleed the clutch line (see Bleeding the Clutch Line).
- Check that the clutch line has proper fluid pressure and no fluid leakage.
- Connect the starter lockout switch lead connector and install the clamps (see Cable, Wire, and Hose Routing Section in the Appendix chapter).
- Install the upper fairing (see Upper Fairing Installation in the Frame chapter).

Clutch Master Cylinder Disassembly/Assembly

- The clutch master cylinder cannot disassemble. If a internal components replacement are required, replace the clutch master cylinder as an assembly.

Clutch Master Cylinder Inspection



- Remove the clutch master cylinder [A] (see Clutch Master Cylinder Removal).
- Check the clutch master cylinder for leakage, and replace the clutch master cylinder assembly if necessary.
- Check the clutch master cylinder for damage, deformation or crack and replace the clutch master cylinder assembly if necessary.

NOTE

○*Do not try to disassemble the clutch master cylinder.*

Clutch Slave Cylinder

Clutch Slave Cylinder Removal

● Remove:
Banjo Bolt [A]
Clutch Slave Cylinder Bolts [B]
Slave Cylinder [C]

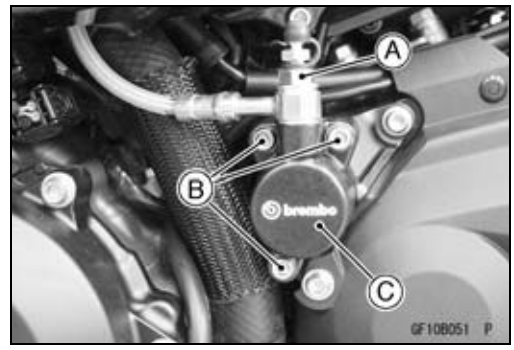

NOTICE
Immediately wash away any clutch fluid that spills. It may damage painted surfaces.

○Perform the following if the clutch slave cylinder is to be removed but not disassembled.

NOTICE
If the clutch slave cylinder is removed and left alone, the piston will be pushed out by spring force and the clutch fluid will drain out.

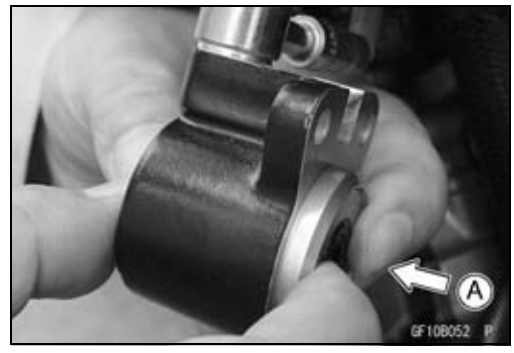

○Remove the clutch slave cylinder from the engine with the pipe installed. Push [A] the piston into the cylinder as far as it will go.

○Apply the clutch lever [A] slowly with the piston pushed and hold it with a band [B].

NOTE

○*Holding the clutch lever keeps the piston from coming out.*

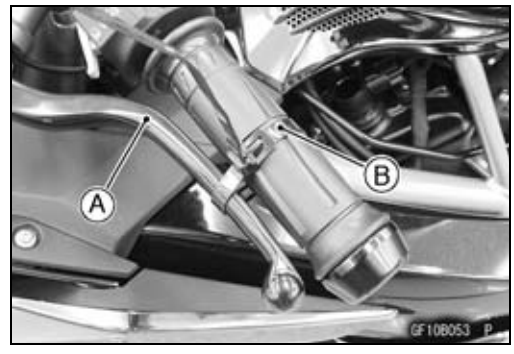

Clutch Slave Cylinder Installation

● Stick the damper [A] to the push rod cover [B], if removed.
○Face the damper ends toward the flat portion [C] of the push rod cover.

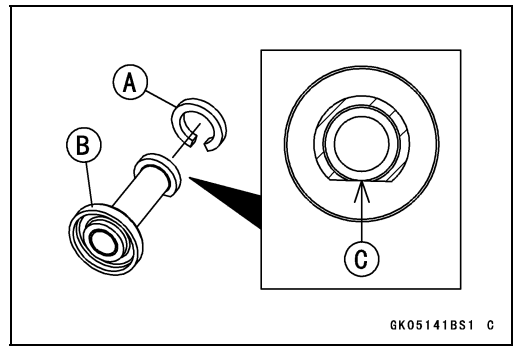

● Replace the O-ring [A].
● Apply molybdenum disulfide grease to either end [B] of the push rod, and install the push rod so that the greased end faces in.
○Apply molybdenum disulfide grease more than 30 mm (1.2 in.) from the distal end.
● Replace the clutch slave cylinder gasket [C] with a new one.

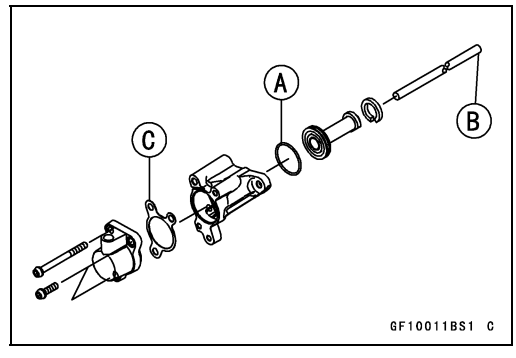

Clutch Slave Cylinder

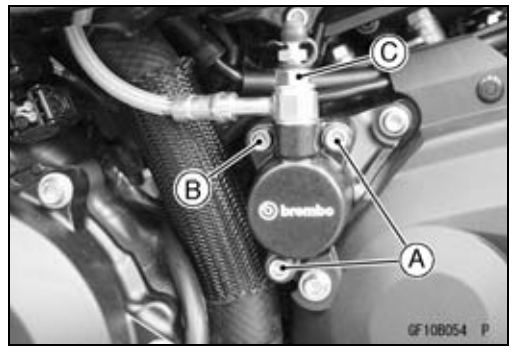

- Apply a non-permanent locking agent to the threads of the slave cylinder mounting bolts.
  Clutch Slave Cylinder Mounting Bolts (L = 20 mm) [A]
  Clutch Slave Cylinder Mounting Bolt (L = 65 mm) [B]
- Finger tighten all the clutch slave cylinder mounting bolts.
- Remove the band from the clutch lever and release the clutch lever.
- Tighten the clutch slave cylinder mounting bolts.

Torque - Clutch Slave Cylinder Mounting Bolts: 10 N·m (1.0 kgf·m, 89 in·lb)

- Replace the washers that are on each side of the hose fitting with new ones.
- Install the clutch hose (see Cable, Wire, and Hose Routing section in the Appendix chapter).
- Tighten:

Torque - Clutch Hose Banjo Bolt [C]: 25 N·m (2.5 kgf·m, 18 ft·lb)

- Check the fluid level in the clutch master cylinder reservoir, and bleed the air in the clutch line.
- Check the clutch operation.

Clutch Fluid

Clutch Fluid Level Inspection

- Refer to the Clutch Fluid Level Inspection in the Periodic Maintenance chapter.

Clutch Fluid Change

- Refer to the Clutch Fluid Change in the Periodic Maintenance chapter.

Bleeding the Clutch Line

⚠ WARNING

Air in the clutch lines diminish clutch performance and can cause an accident resulting in injury or death. If the clutch lever has a soft or "spongy" feeling mushy when it is applied, there might be air in the clutch lines or the clutch may be defective. Do not operate the vehicle and service the clutch system immediately.

NOTICE

Clutch fluid quickly damages painted or plastic surfaces; any spilled fluid should be completely wiped up immediately with wet cloth.

- Remove:
  Clutch Reservoir Cap [A]
  Diaphragm Plate
  Diaphragm
- Fill the reservoir with fresh clutch fluid to the upper level line in the reservoir.

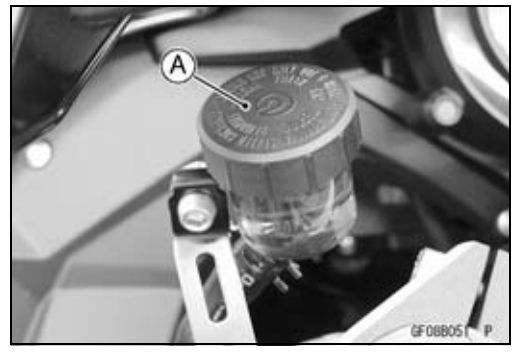

NOTE

○*Tap the clutch hose lightly going from the lower end to upper end and bleed the air off the reservoir.*

- Slowly pump the clutch lever several times until no air bubbles can be seen rising up through the fluid from the hole at the bottom of the reservoir.
- Remove the rubber cap from the bleed valve on the clutch master cylinder.
- Attach a clear plastic hose [A] to the bleed valve, and run the other end of the hose into a container.

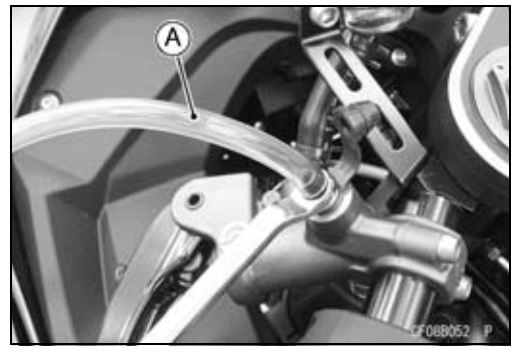

Clutch Fluid

● Bleed the clutch line and the master cylinder.
○Repeat this operation until no more air can be seen coming out into the plastic hose.
1. Pump the clutch lever until it becomes hard, and apply the clutch lever and hold it [A].
2. Quickly open and close [B] the bleed valve while holding the clutch lever applied.
3. Release the clutch lever [C].

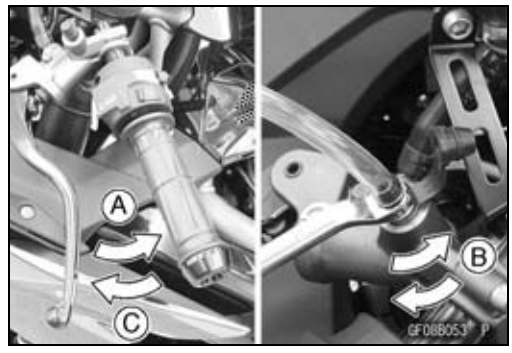

NOTE

○*The fluid level must be checked often during the bleeding operation and replenished with fresh clutch fluid as necessary. If the fluid in the reservoir runs completely out any time during bleeding, the bleeding operation must be done over again from the beginning since air will have entered the line.*

● Remove the clear plastic hose.
● Tighten the bleed valve, and install the rubber cap.

Torque - Clutch Master Cylinder Bleed Valve: 5.5 N·m (0.56 kgf·m, 49 in·lb)

● Remove the rubber cap from the bleed valve.
● Attach a clear plastic hose [A] to the bleed valve on the clutch slave cylinder, and run the other end of the hose into a container.
● Bleed the clutch line as follows.
○Repeat this operation until no more air can be seen coming out into the plastic hose.
1. Pump the clutch lever until it becomes hard, and apply the clutch lever and hold it [B].
2. Hold the banjo bolt [C], and quickly open and close [D] the bleed valve while holding the clutch lever applied.
3. Release the clutch lever [E].

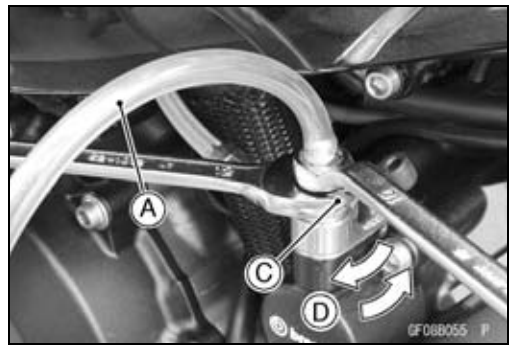

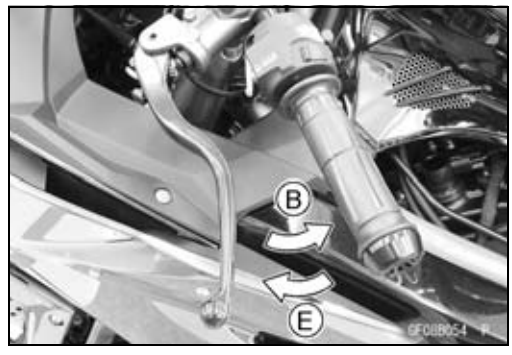

NOTE

○*Check the fluid level in the reservoir often, replenishing it as necessary.*
○*If the fluid in the reservoir runs completely out any time during bleeding, the bleeding operation must be done over again from the beginning since air will have entered the line.*

Clutch Fluid

⚠ WARNING

Mixing brands and types of hydraulic fluid lowers the fluid's boiling point, cause rubber part to deteriorate and can reduce the hydraulic clutch system's effectiveness and cause an accident resulting in injury or death. Do not mix two brands of brake fluid. Change the fluid in the hydraulic clutch system completely if the fluid must be refilled but the type and brand of the hydraulic fluid that is already in the reservoir are unidentified.

- Remove the clear plastic hose.
- Tighten the bleed valve, and install the rubber cap.

Torque - Clutch Slave Cylinder Bleed Valve: 7.9 N·m (0.81 kgf·m, 70 in·lb)

- Install:
  Diaphragm
  Diaphragm Plate
- Tighten:

Torque - Clutch Reservoir Cap (for reference): 1.5 N·m (0.15 kgf·m, 13 in·lb)

- After bleeding the clutch line, check the clutch for good clutching effectiveness and no fluid leakage.

★If necessary, bleed the air from the line again.

Clutch Hose Removal/Installation

- Refer to the Clutch Hose and Pipe Replacement in the Periodic Maintenance chapter.

Clutch Hose Inspection

- Refer to the Clutch Hose and Pipe Damage and Installation Condition Inspection in the Periodic Maintenance chapter.

Clutch Cover

Clutch Cover Removal

- Drain the engine oil (see Engine Oil Change in the Periodic Maintenance chapter).
- Remove:
  Right Middle Fairing (see Middle Fairing Removal in the Frame chapter)
  Right Lower Fairing (see Lower Fairing Removal in the Frame chapter)
  Clutch Cover Bolts [A]
  Brackets [B]
  Clutch Cover [C]

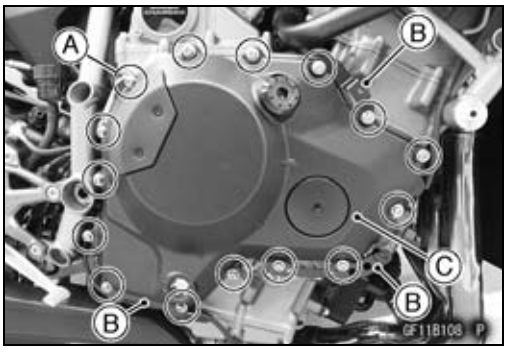

Clutch Cover Installation

- Using a cleaning fluid, clean off any oil or dirt that may be on the mating surface. Dry them with a clean cloth.
- Apply liquid gasket to the area [A] where the mating surface of the crankcase touches the clutch cover gasket and circumference of the crankshaft sensor grommet.

Sealant - Liquid Gasket, TB1211F: 92104-0004



- Replace the clutch cover gasket with a new one.
- Install the brackets [A].
- Apply a non-permanent locking agent to only one clutch cover bolt [B].
- Tighten the clutch cover bolts following the specified tightening sequence [1 ~ 19].

○Tighten the clutch cover bolts while pushing the clutch cover rearward.

Torque - Clutch Cover Bolts: 12 N·m (1.2 kgf·m, 106 in·lb)

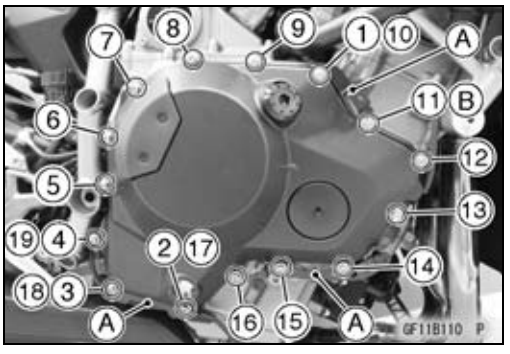

Clutch Cover Disassembly

- Remove:
  Clutch Cover (see Clutch Cover Removal)
  Clutch Cover Damper Plate Bolts [A]
  Clutch Cover Damper Plates [B]
  Dampers [C]

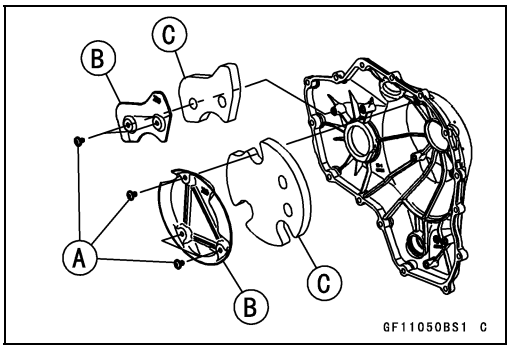

- Remove:
  Oil Filler Plug [A]
  Crankshaft Timing Plug [B]
  Clutch Outer Cover Bolts [C]
  Clutch Outer Cover [D]

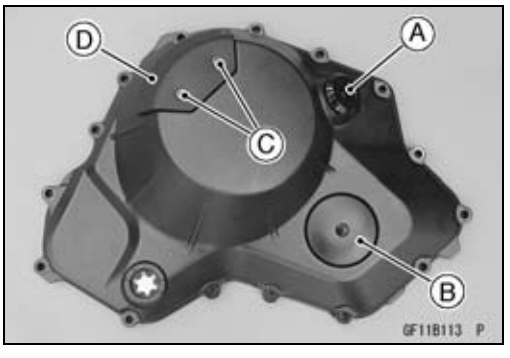

Clutch Cover

- Remove:
  Circlip [A]
  Oil Level Inspection Window [B]

  Special Tool - Inside Circlip Pillers: 57001-143

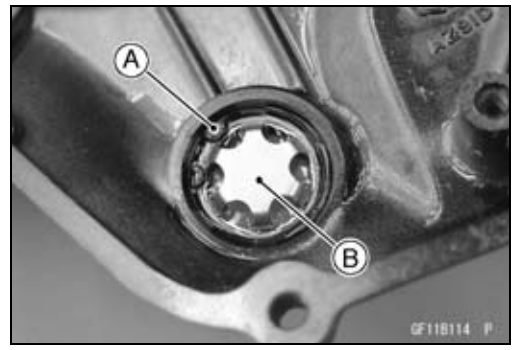

Clutch Cover Assembly

- Replace the circlip and oil level inspection window with new ones.
- Apply soap and water solution to the rubber portion [A] of the oil level inspection window.
- Press the oil level inspection window until the bottom so that is projection [B] faces inside of the clutch cover [C].
- Install the circlip.

  Special Tool - Inside Circlip Pillers: 57001-143

○Fit the circlip into the groove of the clutch cover securely.

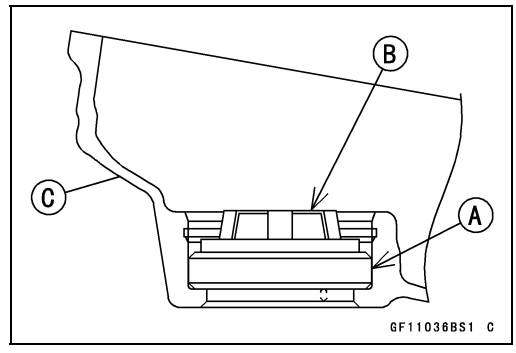

- Replace the O-ring [A] with new a one.
- Apply grease to the O-ring.
- Apply a non-permanent locking agent to the threads of the clutch outer cover bolts [B].
- Install the clutch outer cover [C].
- Tighten:

  Torque - Crankshaft Timing Plug [D]: 25 N·m (2.5 kgf·m, 18 ft·lb)
  Clutch Outer Cover Bolts: 5.0 N·m (0.51 kgf·m, 44 in·lb)

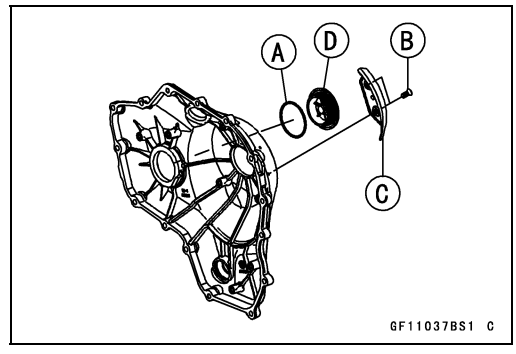

- Install:
  Dampers [A]
  Clutch Cover Damper Plates [B]
- Apply a non-permanent locking agent to the threads of the clutch cover damper plate bolts [C].
- Tighten:

  Torque - Clutch Cover Damper Plate Bolts: 10 N·m (1.0 kgf·m, 89 in·lb)

- Pour in the specified type and amount of oil (see Engine Oil Change in the Periodic Maintenance chapter).

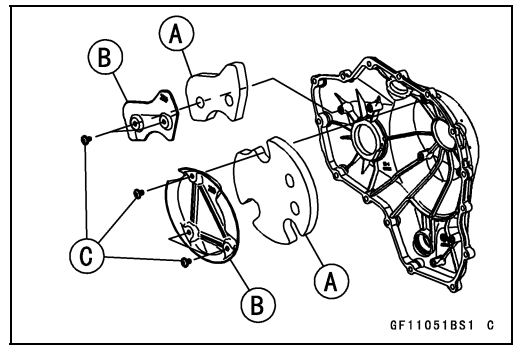

Clutch

Clutch Removal

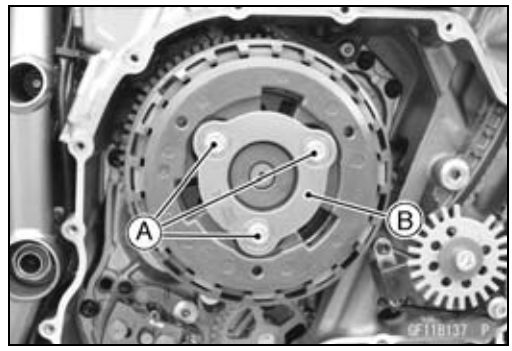

- Remove:
  Clutch Cover (see Clutch Cover Removal)
  Clutch Slave Cylinder (see Clutch Slave Cylinder Removal)
- Loosen the three clutch stopper bolts [A] alternately with little by little (1/4 turn at a time) to prevent tilting the clutch stopper plate [B].

NOTICE
Do not loosen the one or two clutch stopper bolt at once to prevent clutch stopper plate from warpage by the spring force.

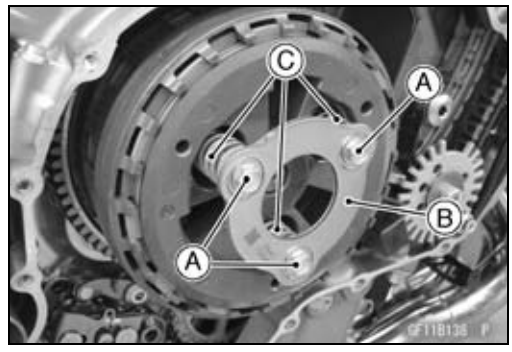

- Remove:
  Clutch Stopper Bolts [A]
  Clutch Stopper Plate [B]
  Clutch Springs [C]
- Visually inspect the clutch stopper plate.

★If the clutch stopper plate is warped, replace it with a new one.

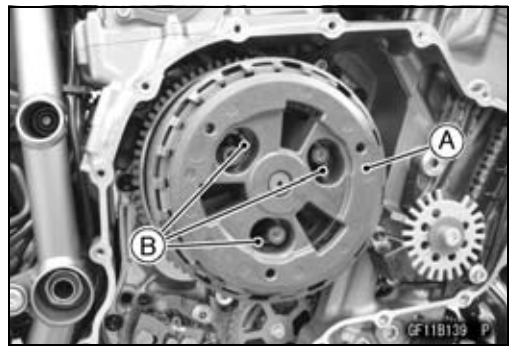

- Remove the clutch pressure plate [A] together with the spring seats [B].

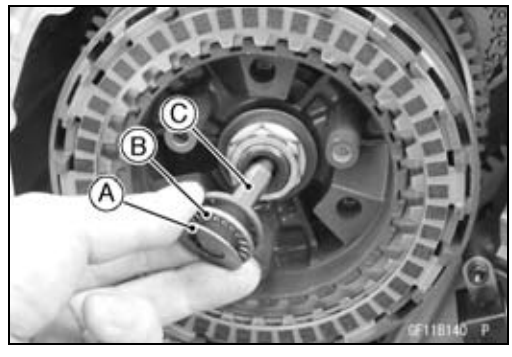

- Remove:
  Washer [A]
  Thrust Bearing [B]
  Pusher [C]
  Friction Plate and Steel Plates

Clutch

● Hold the sub clutch hub [A] steady with the clutch holder [B], and remove the nut [C] and washers.

Special Tool - Clutch Holder: 57001-1243

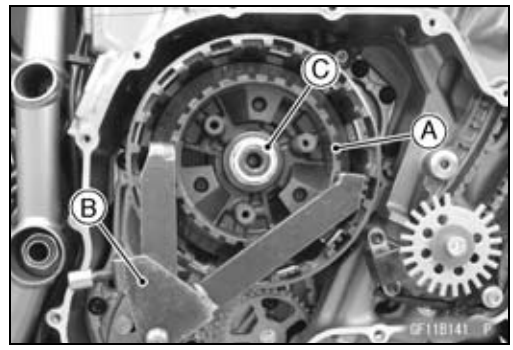

● Remove:
Toothed Washer [A]
Clutch Hub [B]

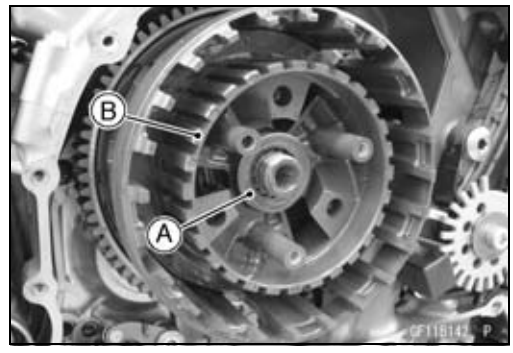

● Remove:
Spacer [A]
Clutch Housing [B]

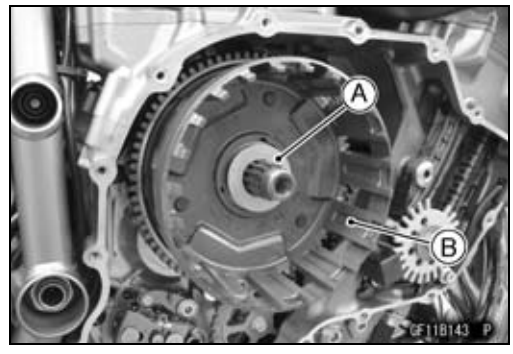

● Remove:
Needle Bearing [A]
Sleeve [B]

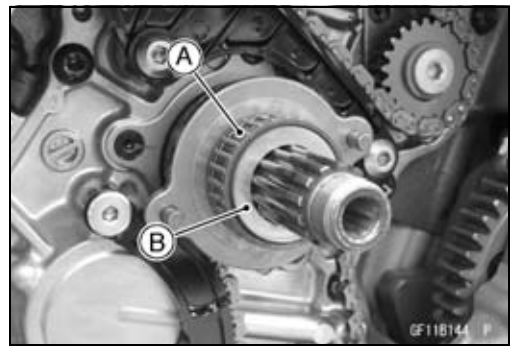

Clutch Installation

● Install the clutch housing [A].

○Fit the holes [B] to the projections [C].

○Engage the clutch housing gear with the crankshaft primary gear.

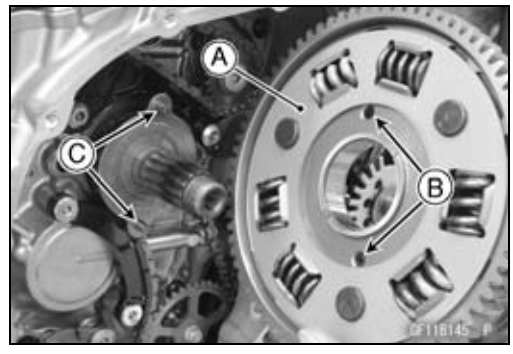

Clutch

- Apply molybdenum disulfide oil solution to the needle bearing [A].
- Apply engine oil to the sleeve [B] and speacer [C].
- Install:
  Needle Bearing
  Sleeve
  Spacer

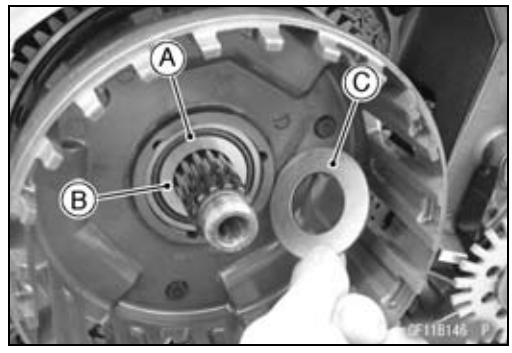

- Install:
  Clutch Hub [A]
  Toothed Washer [B]

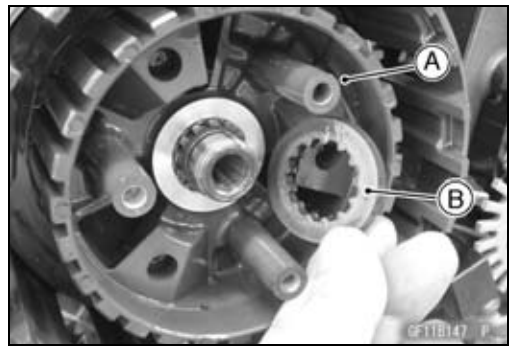

- Replace the clutch hub nut [A] with a new one.
- Hold the sub clutch hub steady with the clutch holder [B], and tighten the clutch hub nut.

Special Tool - Clutch Holder: 57001-1243

Torque - Clutch Hub Nut: 130 N·m (13.3 kgf·m, 95.9 ft·lb)

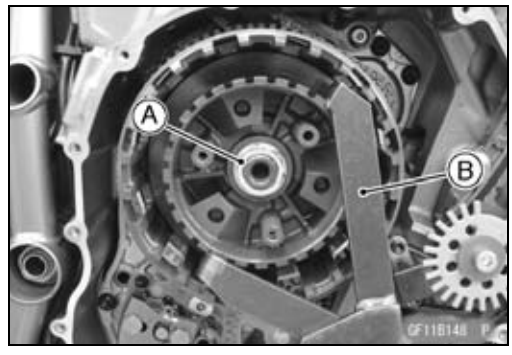

Clutch

- Install the friction plates and steel plate alternately as shown.
  Clutch Hub [A]
  Clutch Pressure Plate [B]
  Spring Seat [C]
  Spring [D]
  Friction Plates [E] (Smaller Lining Blocks)
  Friction Plate [F]
  Steel Plates [G] (T = 2.9 mm)
  Steel Plate [H] (T = 2.6 mm)
  Steel Plate [I] (T = 2.6 mm, Larger Inside Diameter)

○Install the last friction plate and steel plate later with the clutch pressure plate.

NOTICE
If new dry friction plates and steel plates are installed, apply engine oil to the surfaces of each plate to avoid clutch plate seizure.

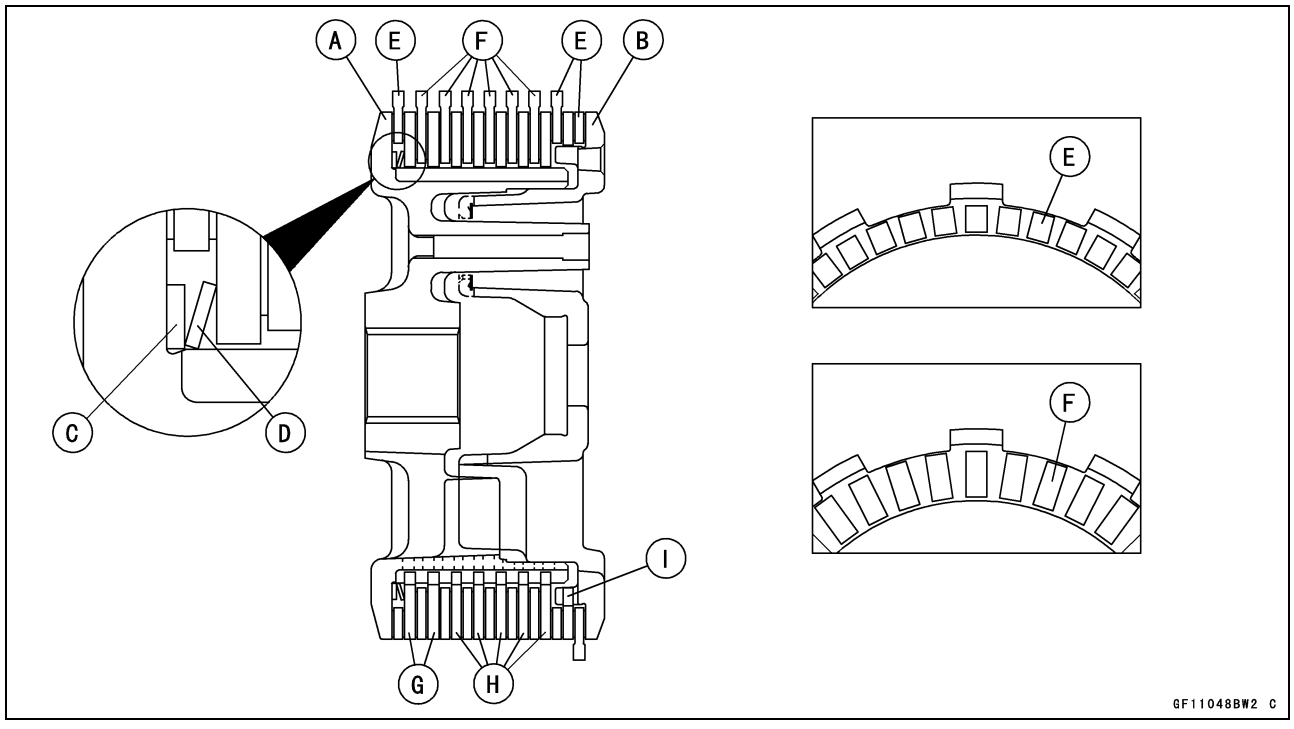

- Apply molybdenum disulfide grease to the outside surface [A] of the pusher [B].
- Install the pusher into the drive shaft.
- Apply molybdenum disulfide grease to the thrust bearing [C] and washer [D].
- Install:
  Thrust Bearing
  Washer

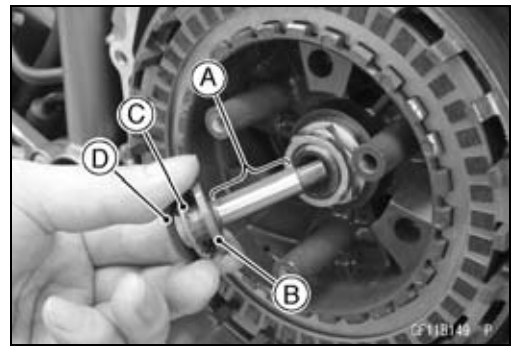

Clutch

● Put the last friction plate [A] and steel plate [B] on the clutch pressure plate [C] and install them.

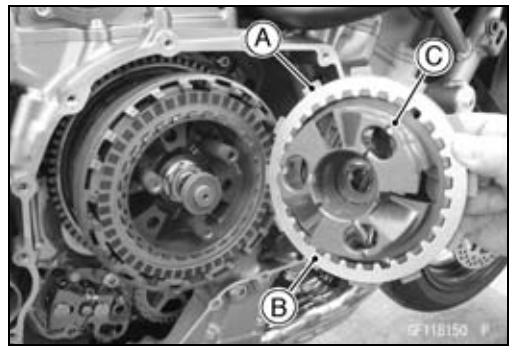

● Install the last friction plate so that the tangs [A] fit into the grooves in the housing as shown.

NOTE

○*Make sure that the clutch pressure plate is installed without a gap.*

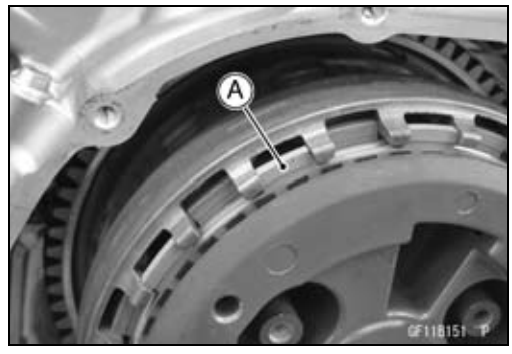

● Be sure to install the spring seats [A] on the clutch pressure plate.

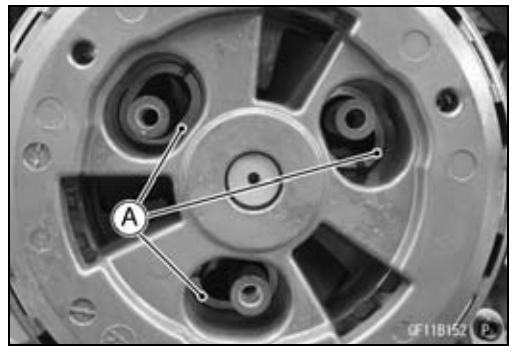

● Install:
Clutch Springs [A]
Clutch Stopper Plate [B]

○The clutch stopper plate faces the mark [C] to outside.

● Tighten the three clutch stopper bolts [D] by hand until they just begin to press each clutch spring.

○Hold the clutch pressure plate by hand while tightening the clutch stopper bolts.

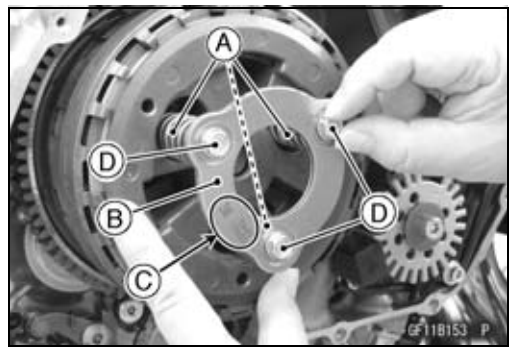

● Tighten the three clutch stopper bolts [A] alternately with little by little (1/4 turn at a time) to prevent tilting the clutch stopper plate [B].

NOTICE
Do not tighten the one or two clutch stopper bolt at once to prevent the clutch stopper plate from warpage by the spring force.

● Tighten:

Torque - Clutch Stopper Bolts: 10 N·m (1.0 kgf·m, 89 in·lb)

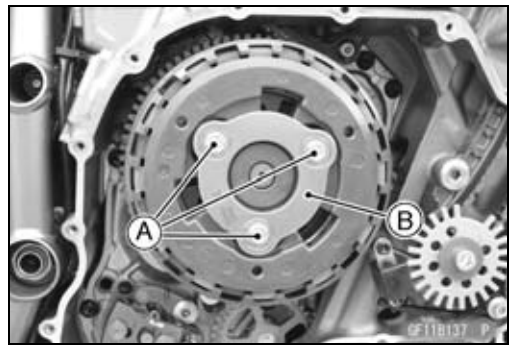

● Install:
Clutch Cover (see Clutch Cover Installation)

Clutch

Clutch Plate Assembly Length Measurement

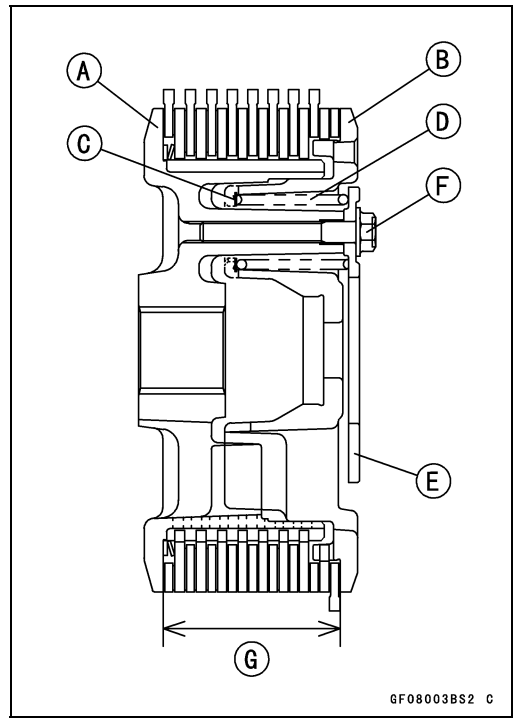

- Assemble the friction plates and steel plates (see Clutch Installation).
- Assemble the following parts.
  Clutch Hub [A]
  Clutch Pressure Plate [B]
  Spring Seats [C]
  Clutch Springs [D]
  Clutch Stopper Plate [E]
  Clutch Stopper Bolts [F]

Torque - Clutch Stopper Bolts: 10 N·m (1.0 kgf·m, 89 in·lb)

- Measure the clutch plate assembly length [G].

Clutch Plate Assembly Length
50.4 ~ 51.4 mm (1.98 ~ 2.02 in.)

★If the length is not within the specified range, adjust the length (see Clutch Plate Assembly Adjustment).

Clutch Plate Assembly Adjustment

- Inspect the clutch plate assembly length, and then replace the steel plate(s) which brings the length within the specified range.
- Remove:
  Clutch Stopper Bolts
  Clutch Stopper Plates
  Clutch Springs
  Clutch Pressure Plate
  Spring Seats
- Replace the following steel plate(s).

Thickness	Part Number
2.3 mm (0.091 in.)	13089-0027
2.6 mm (0.102 in.) (STD)	13089-0028
2.9 mm (0.114 in.)	13089-0030

NOTE

○*Do not use the steel plate of 2.0 mm (0.079 in.) and 2.6 mm (0.102 in.) thickness at the same time.*

○*When adjusting the clutch plate assembly, install the steel plate of 2.3 mm (0.091 in.) or 2.9 mm (0.114 in.) in the two steel plate positions [A].*

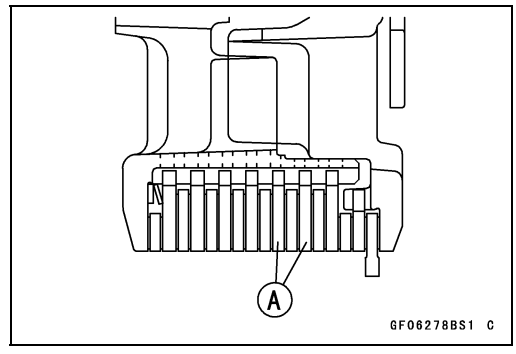

- Install the removed parts, and inspect the clutch plate assembly length.

Torque - Clutch Stopper Bolts: 10 N·m (1.0 kgf·m, 89 in·lb)

Clutch

Clutch Plate, Wear, Damage Inspection

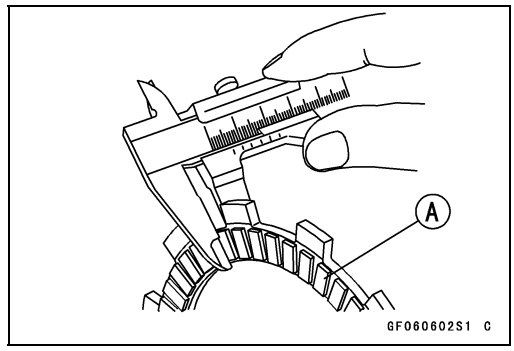

- Visually inspect the friction and steel plates for signs of seizure, overheating (discoloration), or uneven wear.
- Measure the thickness of each friction plate [A] at several points.

★If any plates show signs of damage, or if they have worn past the service limit, replace them with new ones.

Friction Plate Thickness

Standard:	**3.22 ~ 3.38 mm (0.127 ~ 0.133 in.)**
Service Limit:	**2.9 mm (0.11 in.)**

Clutch Plate Warp Inspection

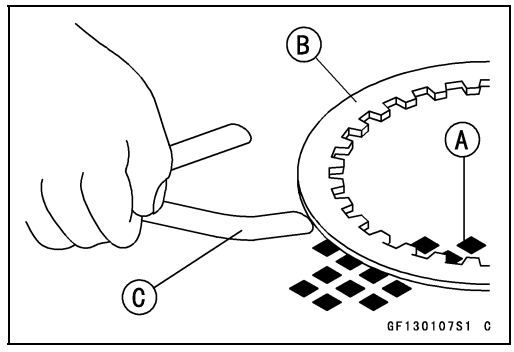

- Place each friction plate or steel plate on a surface plate and measure the gap between the surface plate [A] and each friction plate or steel plate [B] with a thickness gauge [C]. The gap is the amount of friction or steel plate warp.

★If any plate is warped over the service limit, replace it with a new one.

Friction and Steel Plate Warp

Standard:	**0.15 mm (0.0059 in.) or less**
Service Limit:	**0.3 mm (0.01 in.)**

Clutch Housing Finger Inspection

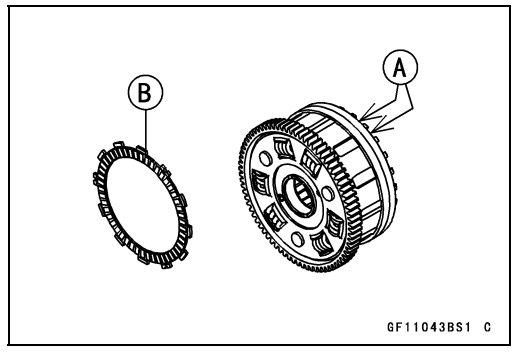

- Visually inspect the clutch housing fingers [A] where the friction plate tangs [B] hit them.

★If they are badly worn or if there are groove cuts where the tangs hit, replace the housing. Also, replace the friction plates if their tangs are damaged.

Clutch Housing Spline Inspection

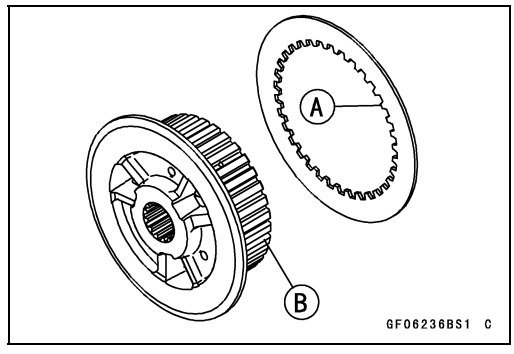

- Visually inspect where the teeth [A] on the steel plates wear against the sub clutch hub splines [B].

★If there are notches worn into the splines, replace the sub clutch hub. Also, replace the steel plates if their teeth are damaged.

Clutch

Clutch Pressure Plate and Clutch Hub Inspection

- Visually inspect the contact areas [A] of the clutch pressure plate [B] and clutch hub [C] for damage.

★If the contact areas are damaged replace them with new ones.

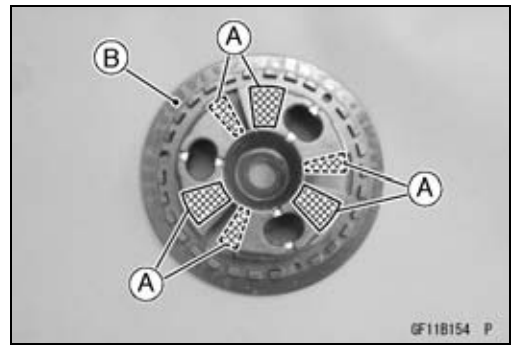

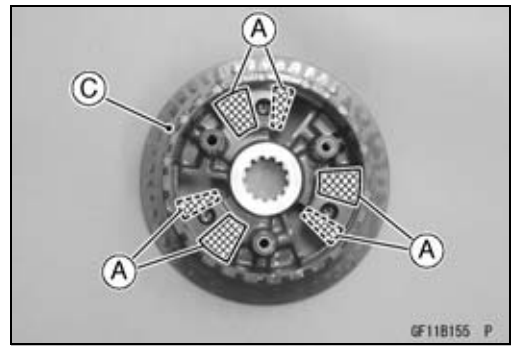

Clutch Spring Inspection

★If all the components are good, but the problem still exists, replace the clutch springs (see Clutch Removal and Clutch Installation).

Engine Lubrication System

Table of Contents

Exploded View 7-2
Engine Oil Flow Chart 7-4
Specifications 7-6
Special Tools and Sealants 7-7
Engine Oil and Oil Filter 7-8
  Oil Level Inspection 7-8
  Engine Oil Change 7-8
  Oil Filter Replacement 7-8
Oil Pan 7-9
  Oil Pan Removal 7-9
  Oil Pan Installation 7-9
Oil Screen 7-10
  Oil Screen Removal 7-10
  Oil Screen Installation 7-10
  Oil Screen Cleaning 7-11
Oil Pressure Relief Valve 7-12
  Oil Pressure Relief Valve Removal 7-12
  Oil Pressure Relief Valve Installation 7-12
  Oil Pressure Relief Valve Inspection 7-12
Oil Pump 7-13
  Oil Pump Removal 7-13
  Oil Pump Installation 7-13
  Oil Pump Driven Gear Removal 7-13
  Oil Pump Driven Gear Installation 7-14
  Oil Pump Driven Gear Shaft Removal 7-14
  Oil Pump Driven Gear Shaft Installation 7-15
Oil Cooler 7-16
  Oil Cooler Removal 7-16
  Oil Cooler Installation 7-16
Oil Pressure Measurement 7-17
  Oil Pressure Measurement 7-17
Oil Pressure Switch 7-18
  Oil Pressure Switch Removal 7-18
  Oil Pressure Switch Installation 7-18

Exploded View

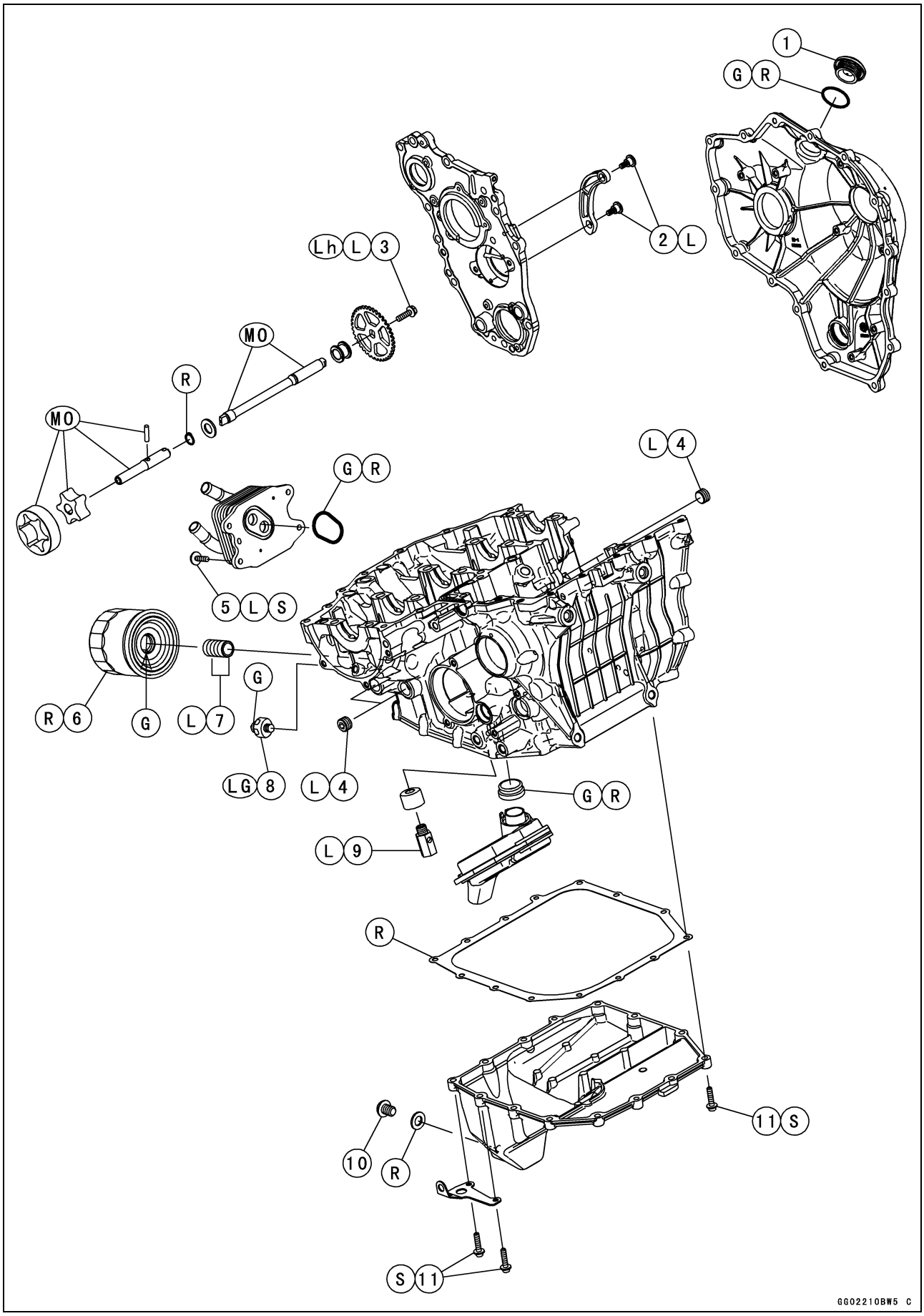

Exploded View

No.	Fastener	Torque			Remarks
		N·m	kgf·m	ft·lb	
1	Oil Filler Plug	10	1.0	89 in·lb	
2	Oil Pump Drive Chain Guide Bolts	10	1.0	89 in·lb	L
3	Oil Pump Driven Gear Bolt	10	1.0	89 in·lb	L, Lh
4	Oil Passage Plugs	20	2.0	15	L
5	Oil Cooler Bolts	15	1.5	11	L, S
6	Oil Filter	17	1.7	13	G, R
7	Oil Filter Pipe	35	3.6	26	L
8	Oil Pressure Switch	15	1.5	11	LG
9	Oil Pressure Relief Valve	15	1.5	11	L
10	Engine Oil Drain Bolt	25	2.5	18	
11	Oil Pan Bolts	10	1.0	89 in·lb	S

G: Apply grease.
L: Apply a non-permanent locking agent.
LG: Apply liquid gasket.
Lh: Left-hand Threads.
MO: Apply molybdenum disulfide oil solution.
(mixture of the engine oil and molybdenum disulfide grease in a weight ratio 10:1)
R: Replacement Parts
S: Follow the specified tightening sequence.

Engine Oil Flow Chart

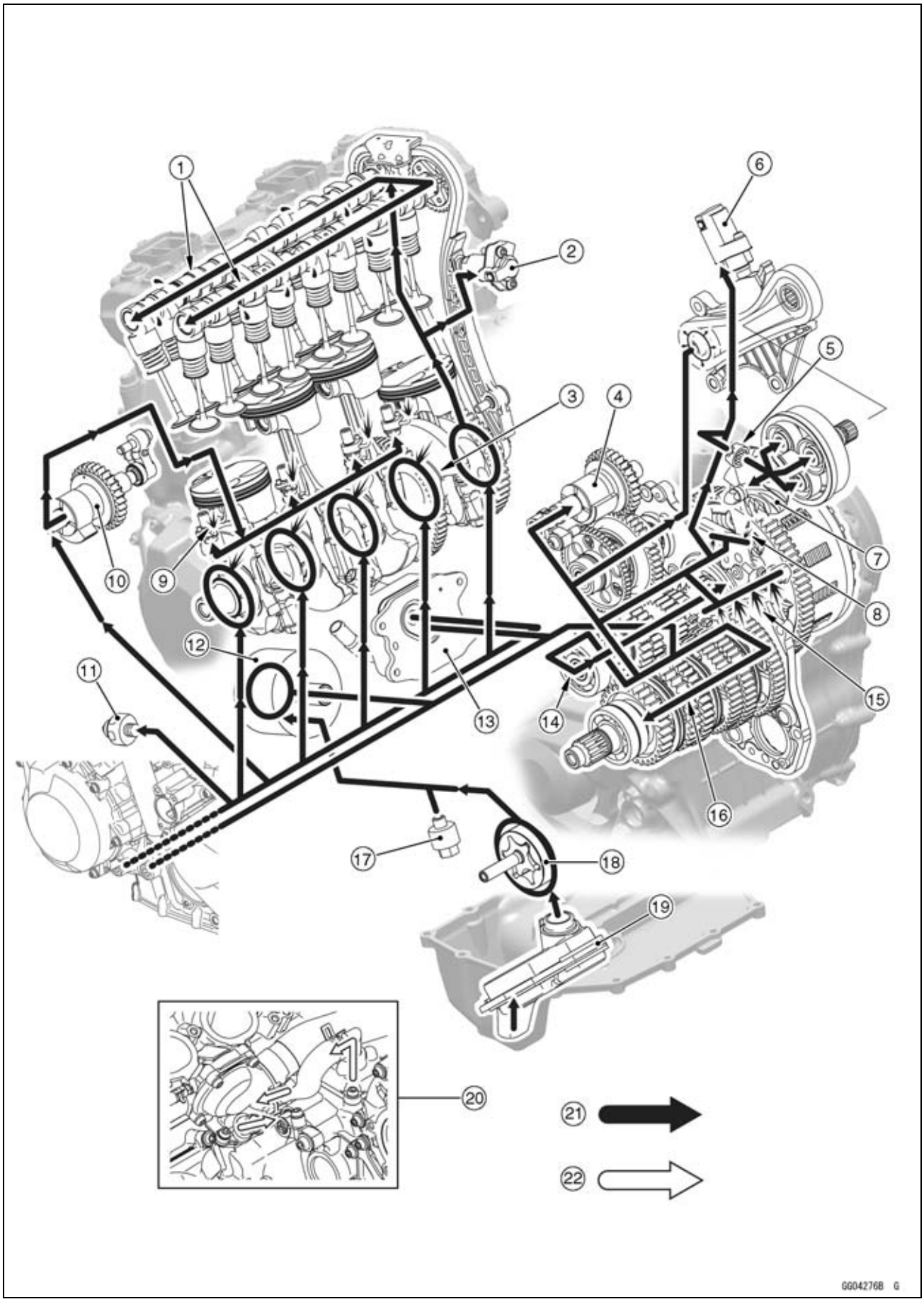

Engine Oil Flow Chart

1. Camshaft Oil Passage
2. Camshaft Chain Tensioner
3. Crankshaft Oil Passage
4. Rear Balancer
5. Supercharger Oil Filter
6. Supercharger Chain Tensioner
7. Supercharger Impeller
8. Supercharger Chain Oil Jet
9. Piston Oil Jet
10. Front Balancer
11. Oil Pressure Switch
12. Oil Filter
13. Oil Cooler
14. Input Shaft Oil Passage
15. Transmission Oil Jet
16. Output Shaft Oil Passage
17. Oil Pressure Relief Valve
18. Oil Pump
19. Oil Screen
20. Blowby Gas Flow
21. Engine Oil
22. Blowby Gas

7-6 ENGINE LUBRICATION SYSTEM

Specifications

Item	Standard
Engine Oil	
Type	API SG, SH, SJ, SL, or SM with JASO MA, MA1 or MA2
Viscosity	SAE 10W-40
Capacity	3.9 L (4.1 US qt) (When filter is not removed.)
	4.4 L (4.7 US qt) (When filter is removed.)
	5.0 L (5.3 US qt) (When engine is completely dry.)
Level	Between upper and lower level lines (Wait several minutes after idling or running)
Oil Pressure Mesurement	
Oil Pressure	156.8 ~ 205.8 kPa (1.60 ~ 2.10 kgf/cm², 22.74 ~ 29.84 psi) @4 000 r/min (rpm), Oil Temperature 50°C (122°F)

Special Tools and Sealants

Outside Circlip Pliers:
57001-144

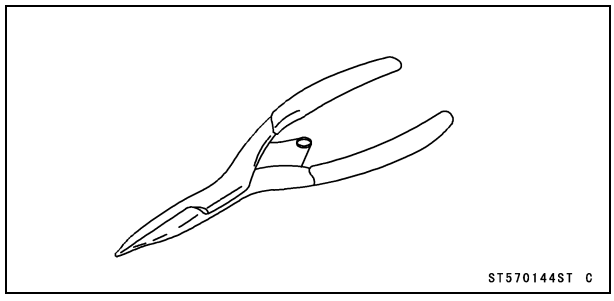

Oil Pressure Gauge Adapter, PT3/8:
57001-1233

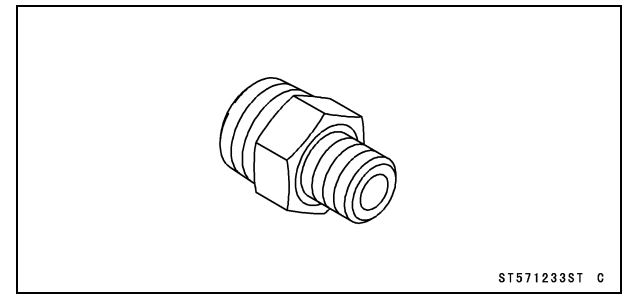

Oil Pressure Gauge, 10 kgf/cm²:
57001-164

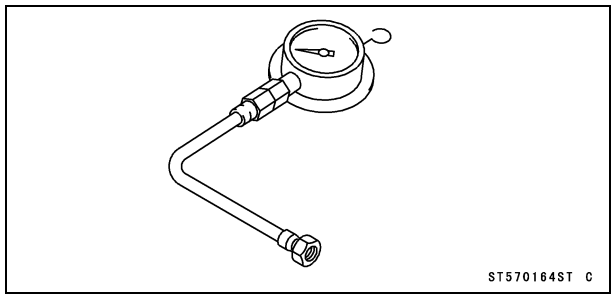

Liquid Gasket, TB1211:
56019-120

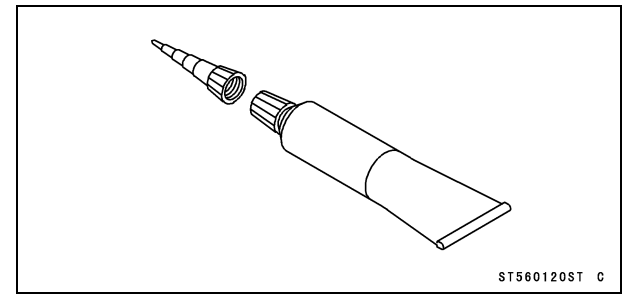

Engine Oil and Oil Filter

⚠ WARNING

Vehicle operation with insufficient, deteriorated, or contaminated engine oil will cause accelerated wear and may result in engine seizure, accident, and injury. Check the oil level before each use and change the oil and filter according to the periodic maintenance chart.

Oil Level Inspection

- Check that the engine oil level is between the upper [A] and lower [B] levels in the oil level inspection window [C].

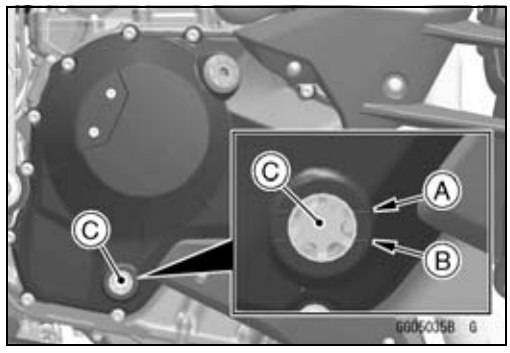

NOTE

○*Situate the motorcycle so that it is perpendicular to the ground.*

○*If the motorcycle has just been used, wait several minutes for all the oil to drain down.*

○*If the oil has just been changed, start the engine and run it for several minutes at idle speed. This fills the oil filter with oil. Stop the engine, then wait several minutes until the oil settles.*

NOTICE

Racing the engine before the oil reaches every part can cause engine seizure.
If the engine oil gets extremely low or if the oil pump or oil passages clog up or otherwise do not function properly, the oil pressure warning indicator will light. If it stays on when the engine is running above idle speed, stop the engine immediately and find the cause.

★If the oil level is too high, remove the excess oil, using a syringe or some other suitable device.

★If the oil level is too low, add the correct amount of oil through the oil filler opening. Use the same type and make of oil that is already in the engine.

NOTE

○*If the engine oil type and make are unknown, use any brand of the specified oil to top off the level in preference to running the engine with the oil level low. Then at your earliest convenience, change the oil completely.*

Engine Oil Change

- Refer to the Engine Oil Change in the Periodic Maintenance chapter.

Oil Filter Replacement

- Refer to the Oil Filter Replacement in the Periodic Maintenance chapter.

Oil Pan

Oil Pan Removal

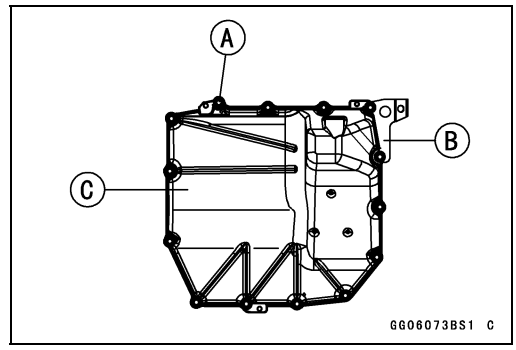

- Drain the engine oil (see Engine Oil Change in the Periodic Maintenance chapter).
- Remove:
  Exhaust Pipe (see Exhaust Pipe Removal in the Engine Top End chapter)
  Oil Pan Bolts [A]
  Bracket [B]
  Oil Pan [C]
  Oil Pan Gasket
- Remove the following part if necessary.
  Oil Screen (see Oil Screen Removal)

Oil Pan Installation

- Install the following part if removed.
  Oil Screen (see Oil Screen Installation)
- Replace the oil pan gasket with a new one.
- Install:
  Oil Pan Gasket
  Oil Pan
  Bracket [A]

- Tighten the oil pan bolts following sequence [1 ~ 18].

Torque - Oil Pan Bolts: 10 N·m (1.0 kgf·m, 89 in·lb)

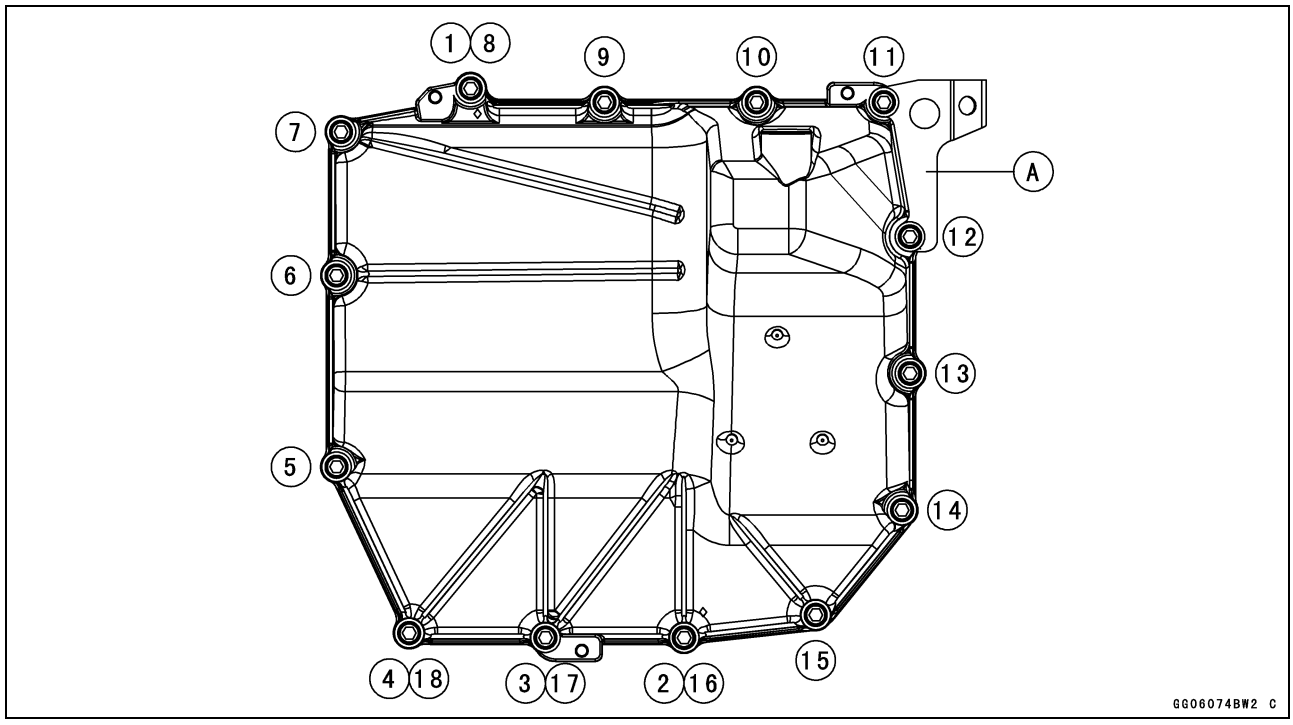

- Install the removed parts (see appropriate chapters).

Oil Screen

Oil Screen Removal

- Remove:
  Oil Pan (see Oil Pan Removal)
  Oil Screen [A]

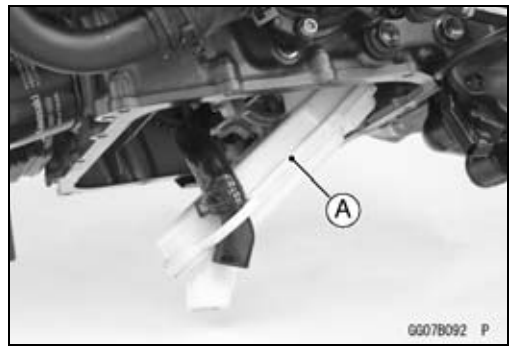

Oil Screen Installation

- Clean the oil screen (see Oil Screen Cleaning).
- Replace the O-ring [A] with a new one, and install it.
- Apply grease to the O-ring.



- Run the breather hose [A] in to the hole [B].
- Install the oil screen so that the crankcase rib [C] fits to the notch [D] of the oil screen.

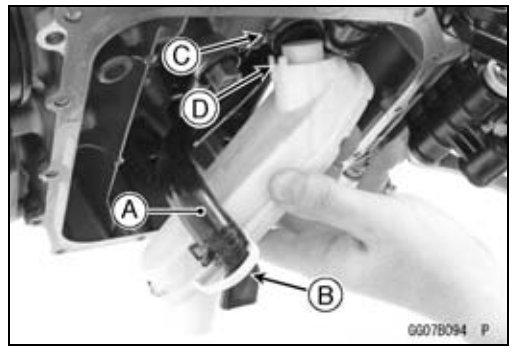

- When installing the oil pipe [A], install it and clamp [B] so that the knob of the clamp faces to the front side.
  Oil Screen [C]
- Install the removed parts (see appropriate chapters).

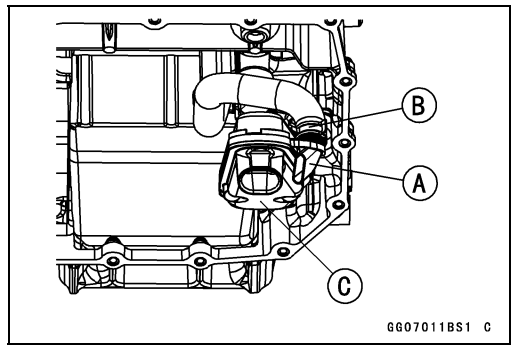

Oil Screen

Oil Screen Cleaning

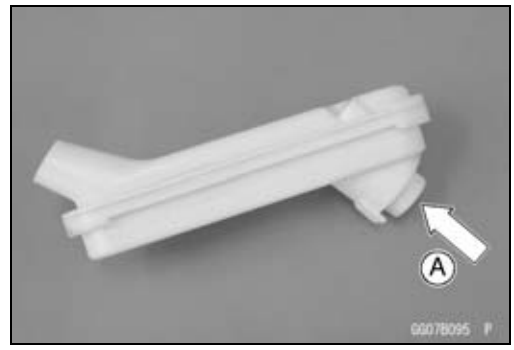

- Remove the oil screen (see Oil Screen Removal).
- Clean the oil screen with a high flash-point solvent from the inside [A] to the outside (from the clean side to the dirty side), and remove the particles stuck.
- Blow away the particles by applying compressed air from the inside to the outside (from the clean side to the dirty side).

⚠ WARNING

Gasoline and low flash-point solvents can be flammable and/or explosive and cause severe burns. Clean the screen in a well-ventilated area, and take care that there are no sparks or flame anywhere near the working area; this includes any appliance with a pilot light. Do not use gasoline or a low flash-point solvent to clean the screen.

NOTE

○*While cleaning the screen, check for any metal particles that might indicate internal engine damage.*

- Check the screens carefully for any damage.

★If the screen is damaged, replace the oil screen.

Oil Pressure Relief Valve

Oil Pressure Relief Valve Removal

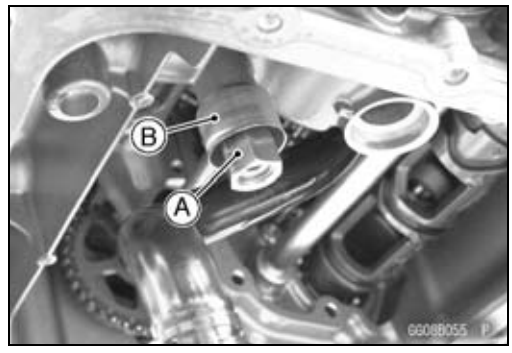

- Remove:
  Oil Screen (see Oil Screen Removal)
  Oil Pressure Relief Valve [A]
  Oil Pressure Relief Valve Cover [B]

Oil Pressure Relief Valve Installation

- Apply a non-permanent locking agent to the threads of the oil pressure relief valve.
- Install the oil pressure relief valve cover.
- Tighten:

Torque - Oil Pressure Relief Valve: 15 N·m (1.5 kgf·m, 11 ft·lb)

- Install the oil screen (see Oil Screen Installation).

Oil Pressure Relief Valve Inspection

- Check to see if the valve [A] slides smoothly when pushing it in with a wooden or other soft rod, and see if it comes back to its seat by spring [B] pressure.

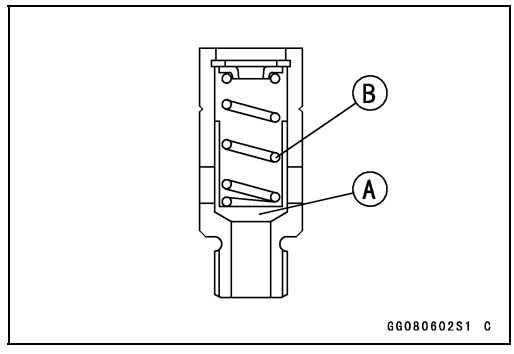

NOTE

○*Inspect the valve in its assembled state. Disassembly and assembly may change the valve performance.*

★If any rough spots are found during above inspection, wash the valve clean with a high flash-point solvent and blow out any foreign particles that may be in the valve with compressed air.

⚠ WARNING

Gasoline and low flash-point solvents can be flammable and/or explosive and cause severe burns. Clean the oil pressure relief valve in a well-ventilated area, and take care that there are no sparks or flame anywhere near the working area; this includes any appliance with a pilot light. Do not use gasoline or a low flash-point solvent to clean the oil pressure relief valve.

★If cleaning does not solve the problem, replace the oil pressure relief valve as an assembly.

Oil Pump

Oil Pump Removal

- Remove:
  Water Pump (see Water Pump Removal in the Cooling System chapter)
  Oil (Water) Pump Shaft [A] with Inner Rotor [B] and Pin
  Outer Rotor [C]

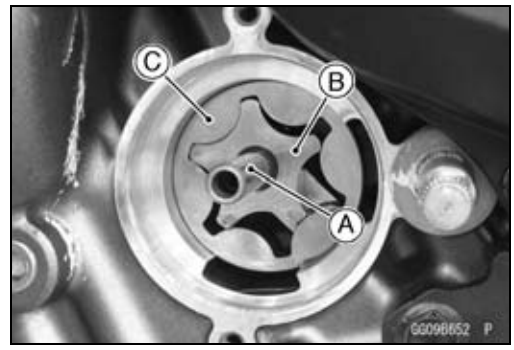

Oil Pump Installation

- Apply molybdenum disulfide oil solution to the outer rotor [A].
- Install the outer rotor into the crankcase.

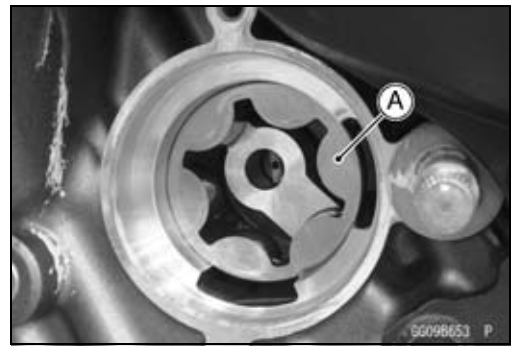

- Apply molybdenum disulfide oil solution to the following parts.
  Oil (Water) Pump Shaft [A]
  Inner Rotor [B]
  Pin [C]
- Assemble the pin, inner rotor and oil (water) pump shaft.

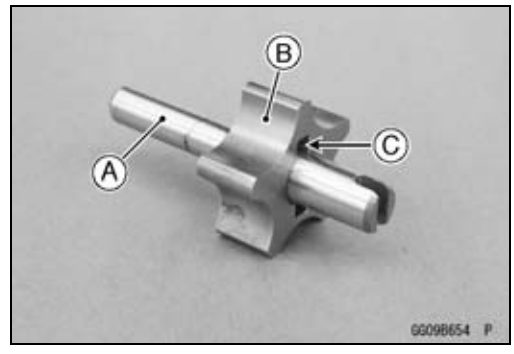

- Turn the pump shaft so that the slot [A] in its shaft fits onto the projection [B] of the oil pump driven gear shaft.
- Install the removed parts (see appropriate chapters).

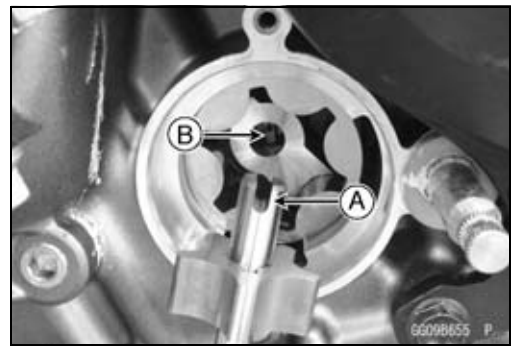

Oil Pump Driven Gear Removal

- Remove the clutch cover (see Clutch Cover Removal in the Clutch chapter).
- Loosen the oil pump driven gear bolt [A].

NOTE

○*The oil pump driven gear bolt has a left-hand threads.*

- Remove the clutch (see Clutch Removal in the Clutch chapter).

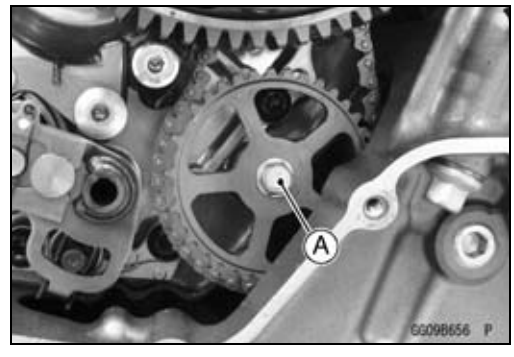

Oil Pump

- Remove:
  Oil Pump Drive Chain Guide Bolts [A]
  Oil Pump Drive Chain Guide [B]
  Oil Pump Driven Gear Bolt [C]
  Oil Pump Driven Gear [D]
  Spacer

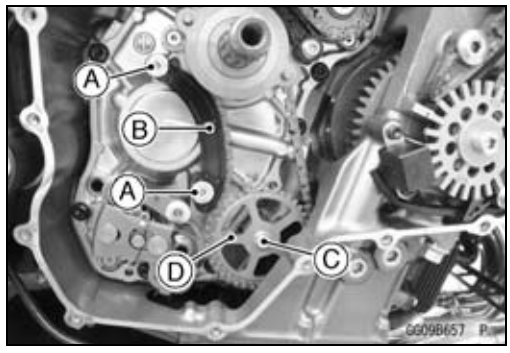

NOTE

○*The oil pump driven gear bolt has a left-hand threads.*

Oil Pump Driven Gear Installation

- Install the spacer [A].

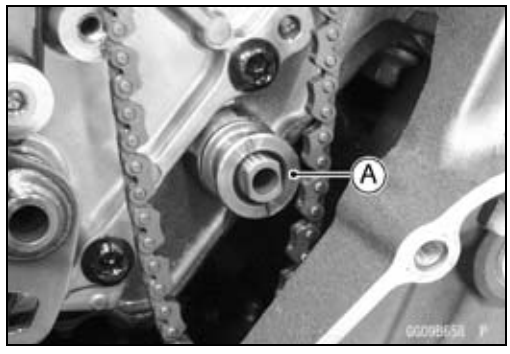

- Align the groove [A] of the oil pump driven gear to the oil pump driven gear shaft to install the oil pump driven gear so that “OUT” letters [B] face outward.
- Apply a non-permanent locking agent to the threads of the oil pump driven gear bolt and temporarily tighten it.

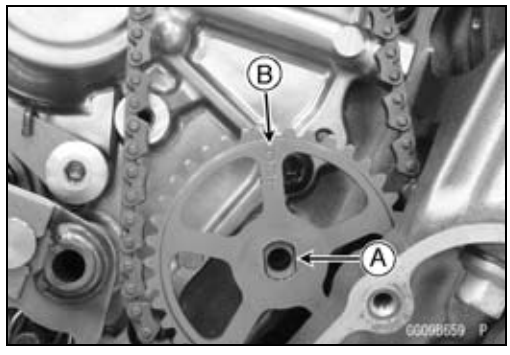

NOTE

○*The oil pump driven gear bolt has a left-hand threads.*

- Apply a non-permanent locking agent to the threads of the oil pump drive chain guide bolts.
- Install the oil drive pump chain guide.
- Tighten:

Torque - Oil Pump Drive Chain Guide Bolts: 10 N·m (1.0 kgf·m, 89 in·lb)

- Install the clutch (see Clutch Installation in the Clutch chapter).
- Tighten:

Torque - Oil Pump Driven Gear Bolt: 10 N·m (1.0 kgf·m, 89 in·lb)

NOTE

○*The oil pump driven gear bolt has a left-hand threads.*

Oil Pump Driven Gear Shaft Removal

- Remove:
  Oil Pump Driven Gear (see Oil Pump Driven Gear Removal)
  Oil Pan (see Oil Pan Removal)
  Oil Screen (see Oil Pressure Relief Valve Removal)
  Circlip [A]
  Washer [B]
  Oil Pump Driven Gear Shaft [C]

Special Tool - Outside Circlip Pliers: 57001-144

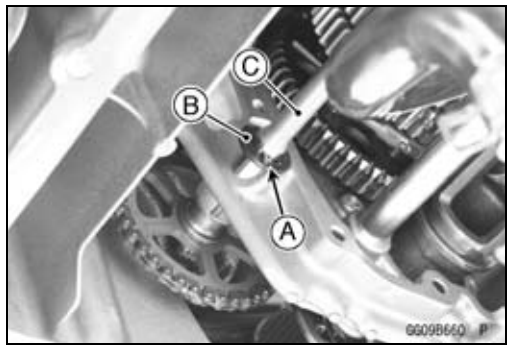

Oil Pump

Oil Pump Driven Gear Shaft Installation

- Apply molybdenum disulfide grease [A] to the oil pump driven gear shaft.
- Apply molybdenum disulfide oil solution [B] to the crankcase.
- Install the oil pump driven gear shaft and washer [C].
- Install the new circlip [D] into the groove of the oil pump driven gear shaft.

Special Tool - Outside Circlip Pliers: 57001-144

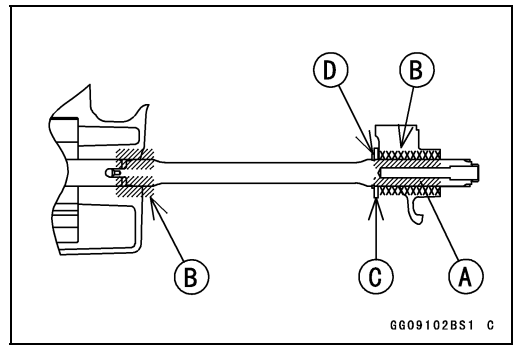

Oil Cooler

Oil Cooler Removal

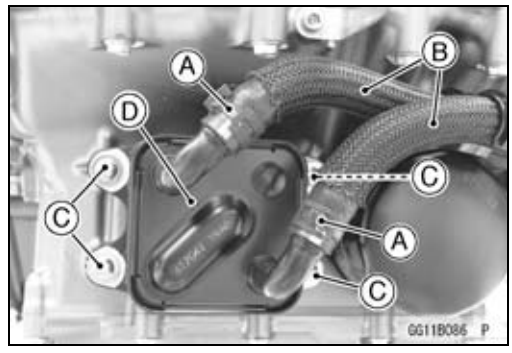

- Drain:
  Coolant (see Coolant Change in the Periodic Maintenance chapter)
  Engine Oil (see Engine Oil Change in the Periodic Maintenance chapter)
- Remove:
  Lower Fairings (see Lower Fairing Removal in the Frame chapter)
  Exhaust Pipe (see Exhaust Pipe Removal in the Engine Top chapter)
- Slide the clamps [A].
- Disconnect the water hoses [B].
- Remove:
  Oil Cooler Bolts [C]
  Oil Cooler [D]

Oil Cooler Installation

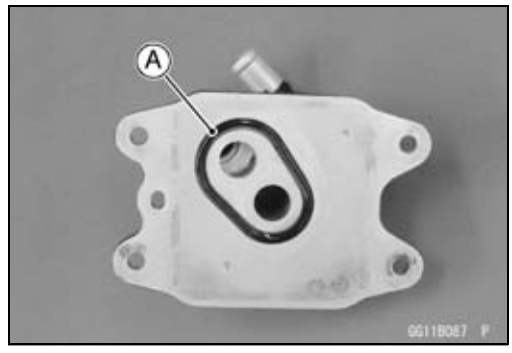

- Replace the O-ring [A] with a new one.
- Apply grease to the O-ring and install it.

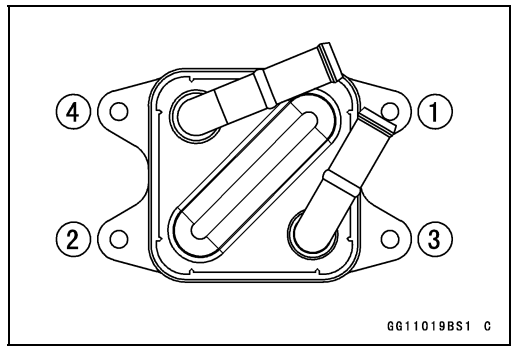

- Install the oil cooler.
- Apply a non-permanent locking agent to the threads of the oil cooler bolts.
- Tighten the oil cooler bolts following sequence [1 ~ 4].

  Torque - Oil Cooler Bolts: 15 N·m (1.5 kgf·m, 11 ft·lb)
- Run the water hoses correctly (see Cable, Wire, and Hose Routing section in the Appendix chapter).
- Install the removed parts (see appropriate chapter).

Oil Pressure Measurement

Oil Pressure Measurement



- Remove:
  Lower Fairings (see Lower Fairing Removal in the Frame chapter)
  Oil Passage Plug [A]

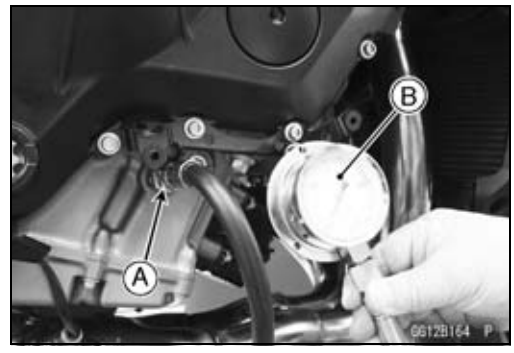

- Attach the adapter [A] and gauge [B] to the plug hole.

Special Tools - Oil Pressure Gauge, 10 kgf/cm²: 57001-164
Oil Pressure Gauge Adapter, PT3/8: 57001 -1233

- Start the engine and warm up the engine.
- Run the engine at the specified speed, and read the oil pressure gauge.

Oil Pressure
Standard: 156.8 ~ 205.8 kPa (1.60 ~ 2.10 kgf/cm², 22.74 ~ 29.84 psi) @4 000 r/min (rpm), Oil temperature 50°C (122°F)

★If the oil pressure is much lower than the standard, check the oil pump, relief valve, and/or crankshaft bearing insert wear immediately.

★If the reading is much higher than the standard, check the oil passages for clogging.

- Stop the engine.
- Remove the oil pressure gauge and adapter.

⚠ WARNING

Hot oil can cause severe burns. Beware of hot engine oil that will drain through the oil passage when the gauge adapter is removed.

- Apply a non-permanent locking agent to the oil passage plug, and tighten it.

Torque - Oil Passage Plug: 20 N·m (2.0 kgf·m, 15 ft·lb)

Oil Pressure Switch

Oil Pressure Switch Removal

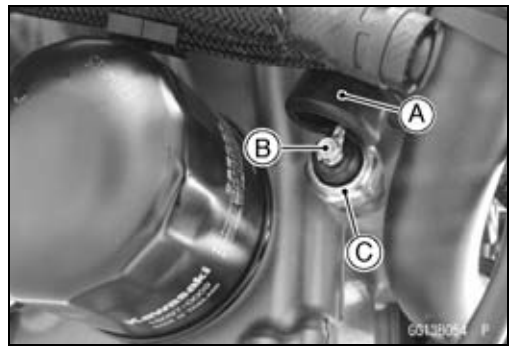

- Drain the engine oil (see Engine Oil Change in the Periodic Maintenance chapter).
- Remove the left lower fairing (see Lower Fairing Removal in the Frame chapter).
- Slide the switch cover [A].
- Remove:
  Switch Terminal Bolt [B]
  Oil Pressure Switch [C]

Oil Pressure Switch Installation

- Using a high flash-point solvent, clean off any oil or dirt that may be on the liquid gasket coating area. Dry them with a clean cloth.
- Apply liquid gasket to the threads of the oil pressure switch and tighten it.

Sealant - Liquid Gasket, TB1211: 56019-120

Torque - Oil Pressure Switch: 15 N·m (1.5 kgf·m, 11 ft·lb)

- Install the switch lead (see Cable, Wire, and Hose Routing section in the Appendix chapter).
- Apply grease to the terminal.

NOTE

○*Apply a small amount grease to the terminal so that grease should not close two breather holes [A] for switch diaphragm.*

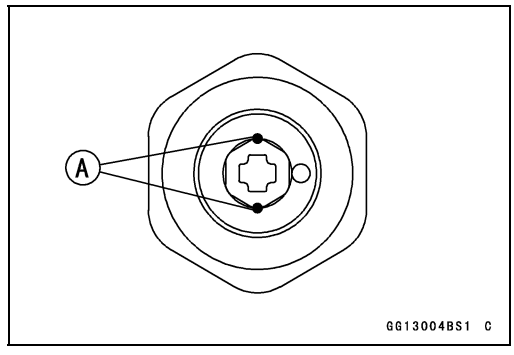

- Install the switch cover.
- Install the removed parts (see appropriate chapters).

Engine Removal/Installation

Table of Contents

Exploded View 8-2
Engine Removal/Installation 8-4
Engine Removal 8-4
Engine Installation 8-10
Swingarm Mounting Plate Removal 8-12
Swingarm Mounting Plate Installation 8-12

Exploded View

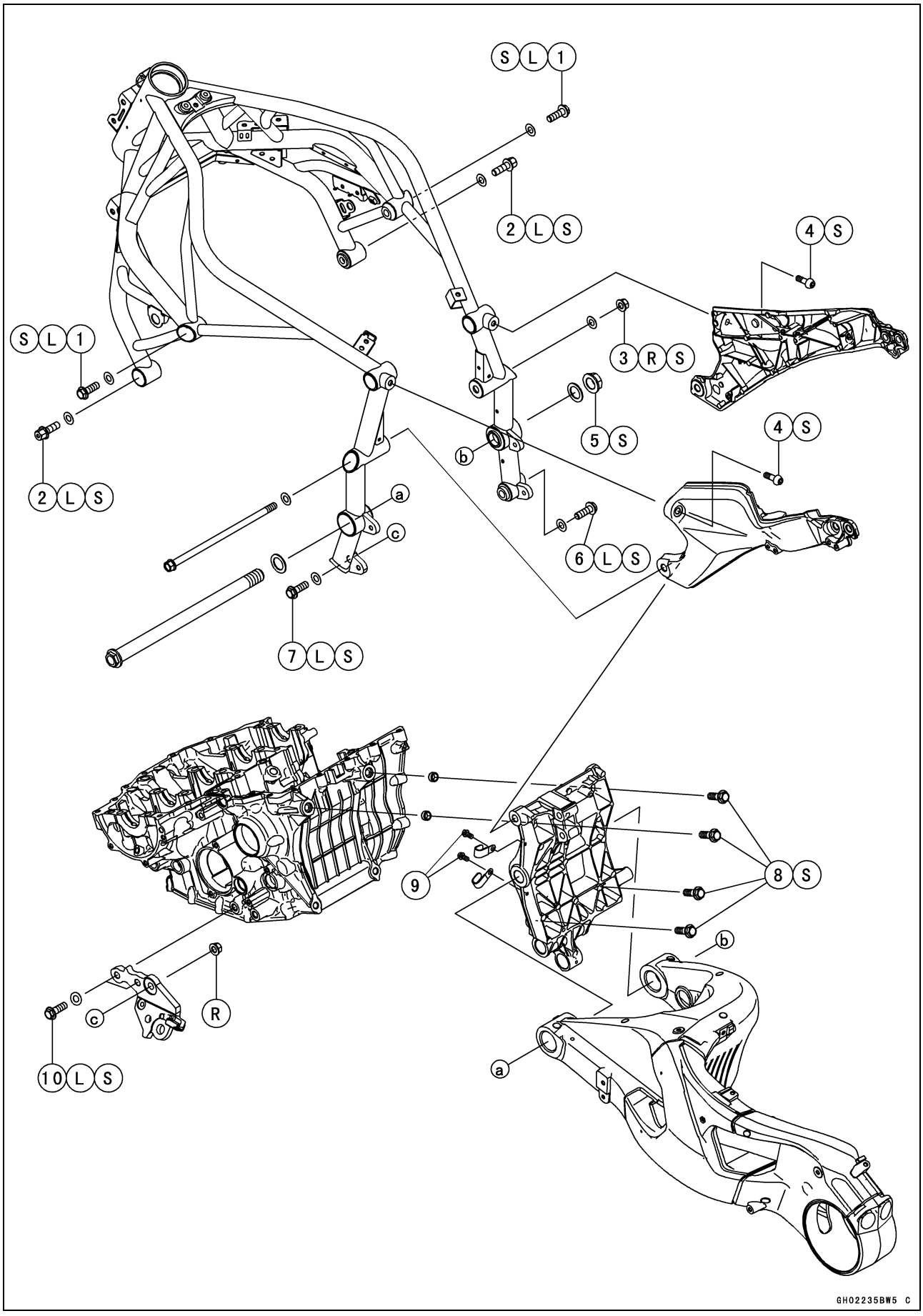

Exploded View

No.	Fastener	Torque			Remarks
		N·m	kgf·m	ft·lb	
1	Front Engine Mounting Bolts (Rear)	44	4.5	32	L, S
2	Front Engine Mounting Bolts (Front)	44	4.5	32	L, S
3	Swingarm Mounting Plate Nut (Upper)	44	4.5	32	R, S
4	Rear Frame Front Bolts	25	2.5	18	S
5	Swingarm Pivot Shaft Nut	108	11.0	79.7	S
6	Swingarm Mounting Plate Bolt (Lower)	44	4.5	32	L, S
7	Side Stand Bracket Bolt (Rear)	49	5.0	36	L, S
8	Rear Engine Mounting Bolts	44	4.5	32	S
9	Clamp Mounting Bolts	10	1.0	89 in·lb	
10	Side Stand Bracket Bolts (Front)	49	5.0	36	L, S

L: Apply a non-permanent locking agent.
R: Replacement Parts
S: Follow the specified tightening sequence.

Engine Removal/Installation

Engine Removal

- Support the front and rear of the motorcycle with the stands.

⚠ WARNING

Motorcycle may fall over unexpectedly resulting in an accident or injury. Be sure to use the front and rear stands when removing the engine.

NOTICE

Be sure to use the front and rear stands when removing the engine, or the motorcycle may fall over. The engine or the motorcycle could be damaged.

- Drain:
  Engine Oil (see Engine Oil Change in the Periodic Maintenance chapter)
  Coolant (see Coolant Change in the Periodic Maintenance chapter)
- Remove:
  Middle Fairings (see Middle Fairing Removal in the Frame chapter)
  Rear Intake Duct (see Intake Duct Removal in the Frame chapter)
  Fuel Tank (see Fuel Tank Removal in the Fuel System (DFI) chapter)
  Air Intake Chamber (see Air Intake Chamber Removal in the Fuel System (DFI) chapter)
  Throttle Body Assy (see Throttle Body Assy Removal in the Fuel System (DFI) chapter)
  Air Cleaner Housing (see Air Cleaner Housing Removal in the Fuel System (DFI) chapter)
  Air Switching Valve (see Air Switching Valve Removal in the Engine Top End chapter)
  Radiator (see Radiator and Radiator Fan Removal in the Cooling System chapter)
  Muffler Body (see Muffler Body Removal in the Engine Top End chapter)
  Exhaust Pipe (see Exhaust Pipe Removal in the Engine Top End chapter)
  Clutch Slave Cylinder (see Clutch Slave Cylinder Removal in the Clutch chapter)
  Right Footpeg Bracket Bolts (see Brake Pedal Removal in the Brakes chapter)
  Shift Lever (see Shift Pedal Removal in the Crankshaft/Transmission chapter)
  Engine Sprocket (see Engine Sprocket Removal in the Final Drive chapter)
  Oil Pressure Switch Terminal (see Oil Pressure Switch Removal in the Engine Lubrication System chapter)
- Disconnect
  Camshaft Position Sensor Connector (see Camshaft Position Sensor Removal in the Electrical System chapter)
  Stic Coil Connectors (Stic Coil Removal in the Electrical System chapter)

Engine Removal/Installation

- Remove:
  Knock Sensor Bolt [A]
  Knock Sensor [B]
- Disconnect:
  Gear Position Sensor Lead Connector [C]
  Quick Shifter Sensor Lead Connector [D]

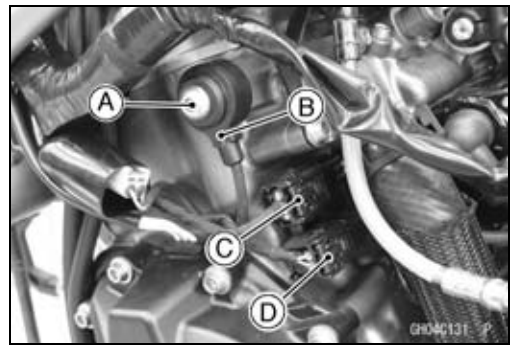

- Open the clamp [A] and free the oil pressure switch lead [B] and hoses [C].

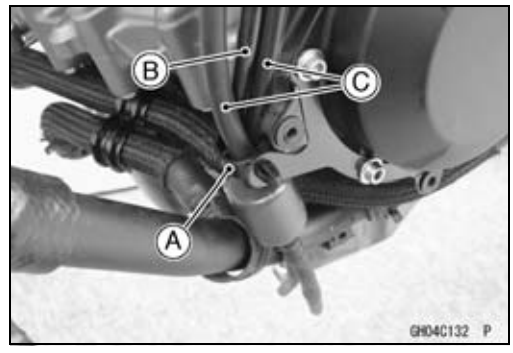

- Remove:
  Air Suction Valve Cover Bolt [A]
  Bracket [B]

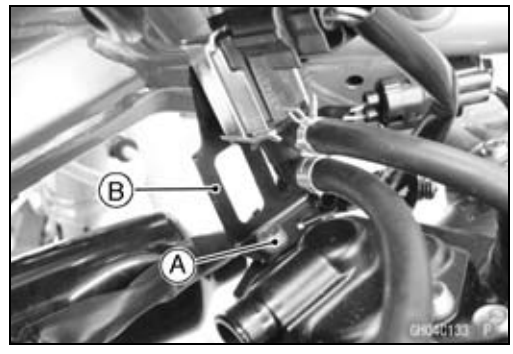

- Disconnect the crankshaft sensor lead connector [A], and remove the connector from the bracket.

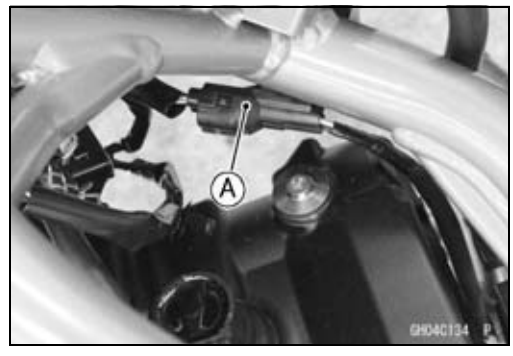

- Remove the clamp [A] and free the clutch pipe.
- Open the clamp [B] and free the main harness.

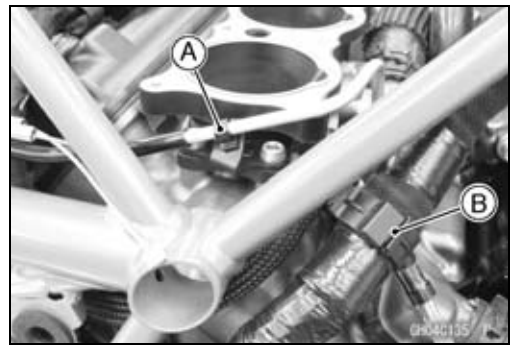

Engine Removal/Installation

- Remove:
  Clutch Pipe Fitting Bolt [A]
- Slide the clamp and disconnect the water hose [B].

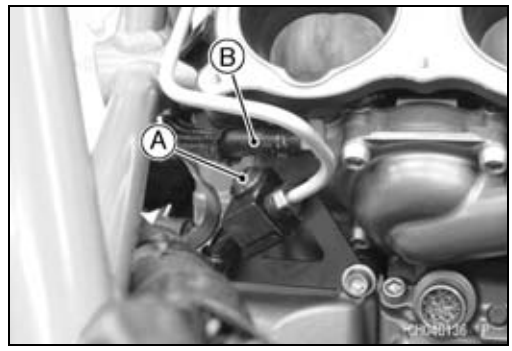

- Remove the water hose fitting [A] to prevent damage to the fitting.



- Disconnect:
  Water Temperature Sensor Connector [A].



- Remove the connector [A] from the bracket.
- Slide out the rubber cap [B].
- Remove the starter motor cable terminal nut [C].

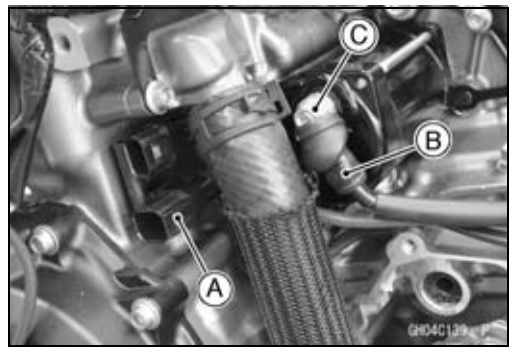

- Remove:
  Engine Ground Cable Terminal Bolt [A]
- Disconnect:
  Side Stand Switch Lead Connector [B]

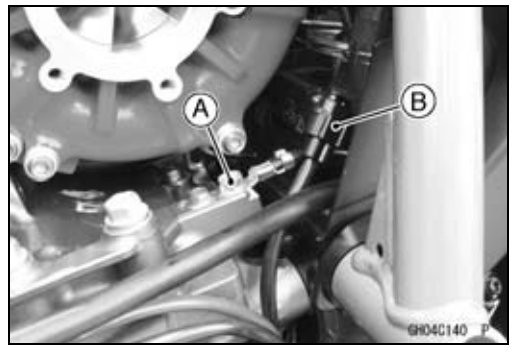

Engine Removal/Installation

● Open the clamps [A] and free the leads.



● Remove:
Side Stand Bracket Bolt (Rear) [A] and Nut
Side Stand Bracket Bolts (Front) [B] and Washers
Side Stand Bracket [C]

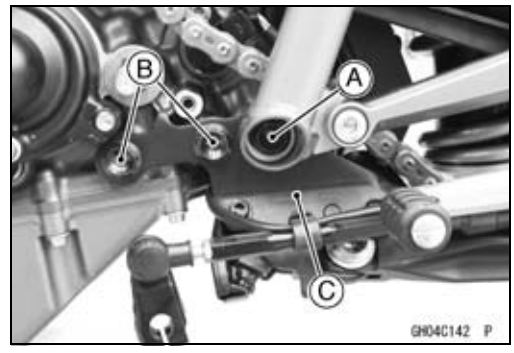

● Remove :
Radiator Stay Bolt [A]
Radiator Stay [B]

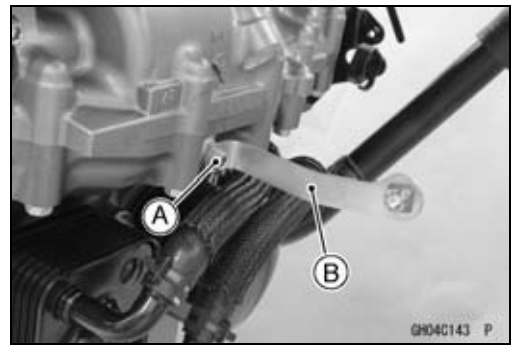

● Install the webbing sling [A] as shown.
○Do not hold the crankshaft sensor lead [B] and main harness [C] with the webbing sling.

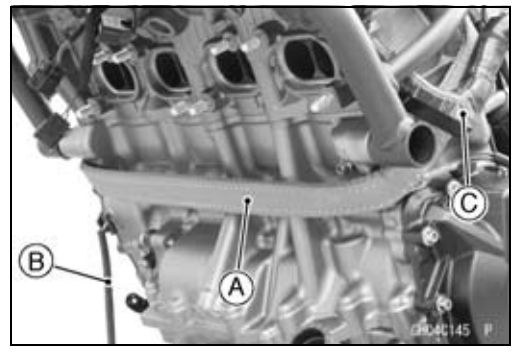

● Remove (Both Sides):
Front Engine Mounting Bolt (Front) [A]
Front Engine Mounting Bolt (Rear) [B]

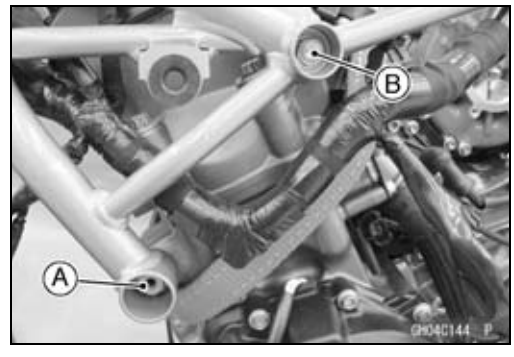

Engine Removal/Installation

● Loosen (Both Sides):
Rear Frame Front Bolt [A]



● Loosen:
Swingarm Mounting Plate Nut (Upper) [A]
Swingarm Pivot Shaft Nut [B]
Swingarm Mounting Plate Bolt (Lower) [C]
● Remove :
Rear Brake Reservoir Bolt [D]

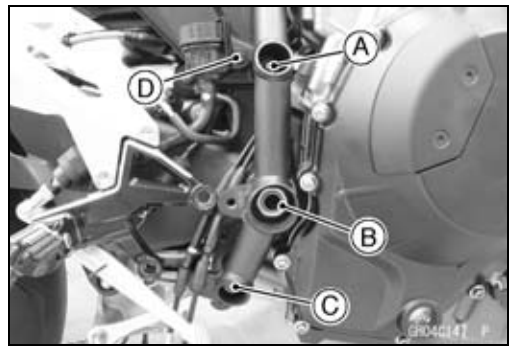

● Remove:
Rear Engine Mounting Bolts [A]

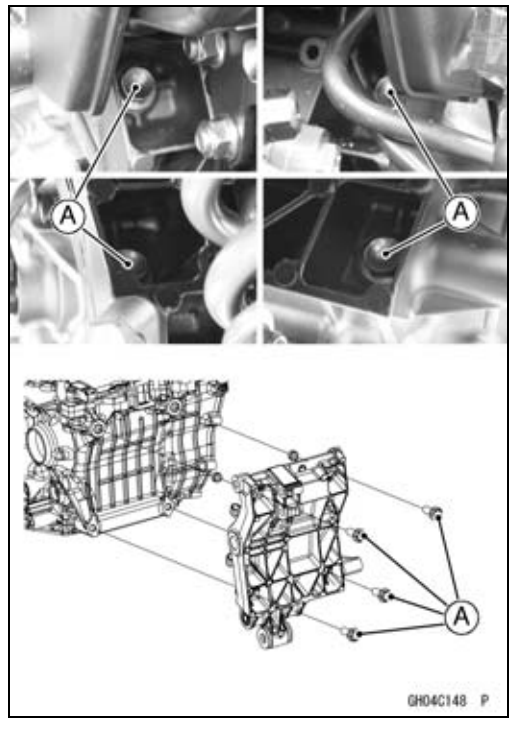

● Turn the engine by 180 degrees [A] to remove it.

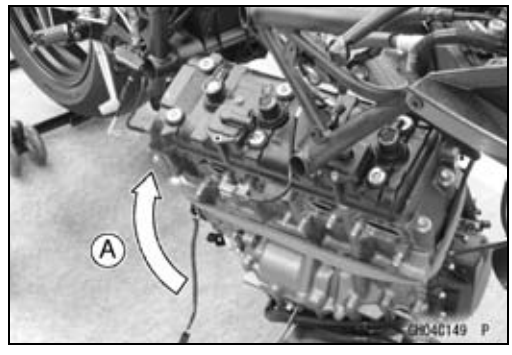

Engine Removal/Installation

- Remove the engine [A] from the frame.

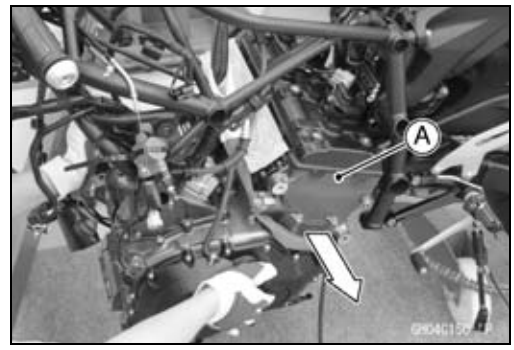

- If necessary, prepare a new swingarm mounting plate [A] to hold the engine with the engine stand.
  Swingarm Mounting Plate (Part Number: 32036-0353)

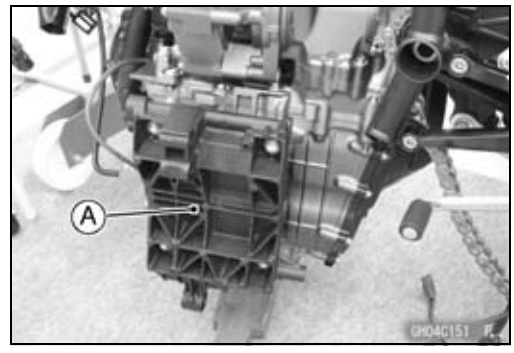

Engine Removal/Installation

Engine Installation

● Support the front and rear of the motorcycle with the stands.
● Install the dowel pins [A].
● Install the engine to the swingarm mounting plate [B] on the frame.
○Hang the drive chain to the output shaft.
● Tighten:

Torque - Rear Engine Mounting Bolts [C]: 44 N·m (4.5 kgf·m, 32 ft·lb)

● Replace the following nuts with new ones.
Swingarm Mounting Plate Nut (Upper) [D]
Side Stand Bracket Nut [E]
● Apply a non-permanent locking agent to the following bolts.
Front Engine Mounting Bolts (Front) [F]
Front Engine Mounting Bolts (Rear) [G]
Swingarm Mounting Plate Bolt (Lower) [H]
Side Stand Bracket Bolts (Front) [I]
Side Stand Bracket Bolt (Rear) [J]
● Install the bolts and nuts, following the specified tightening sequence.
○First, tighten the front engine mounting bolts (front) loosely.
○Second, tighten the front engine mounting bolts (rear) loosely.
○Third, tighten the swingarm mounting plate bolt (lower) loosely.
○Forth, tighten the following bolts and nuts temporarily.
Front Engine Mounting Bolts (Front)
Front Engine Mounting Bolts (Rear)
Swingarm Mounting Plate Nut (Upper)
Swingarm Mounting Plate Bolt (Lower)
Side Stand Bracket Bolt (Rear)
Rear Frame Front Bolts [K]
Side Stand Bracket Bolts (Front) with Washers
Swingarm Pivot Shaft Nut [L]
○Fifth, tighten the bolts and nuts to specified torque in the following order.

Torque - 1. Front Engine Mounting Bolt (Front, Left): 44 N·m (4.5 kgf·m, 32 ft·lb)
2. Front Engine Mounting Bolt (Front, Right): 44 N·m (4.5 kgf·m, 32 ft·lb)
3. Swingarm Pivot Shaft Nut: 108 N·m (11.0 kgf·m, 79.7 ft·lb)
4. Front Engine Mounting Bolt (Rear Left): 44 N·m (4.5 kgf·m, 32 ft·lb)
5. Front Engine Mounting Bolt (Rear Right): 44 N·m (4.5 kgf·m, 32 ft·lb)
6. Rear Frame Front Bolts: 25 N·m (2.5 kgf·m, 18 ft·lb)
7. Swingarm Mounting Plate Nut (Upper): 44 N·m (4.5 kgf·m, 32 ft·lb)
8. Side Stand Bracket Bolt (Front, Front Side Bolt): 49 N·m (5.0 kgf·m, 36 ft·lb)
9. Side Stand Bracket Bolt (Front, Rear Side Bolt): 49 N·m (5.0 kgf·m, 36 ft·lb)
10. Side Stand Bracket Bolt (Rear): 49 N·m (5.0 kgf·m, 36 ft·lb)
11. Swingarm Mounting Plate Bolt (Lower): 44 N·m (4.5 kgf·m, 32 ft·lb)
12. Front Engine Mounting Bolt (Front, Left): 44 N·m (4.5 kgf·m, 32 ft·lb)
13. Front Engine Mounting Bolt (Front, Right): 44 N·m (4.5 kgf·m, 32 ft·lb)

Engine Removal/Installation

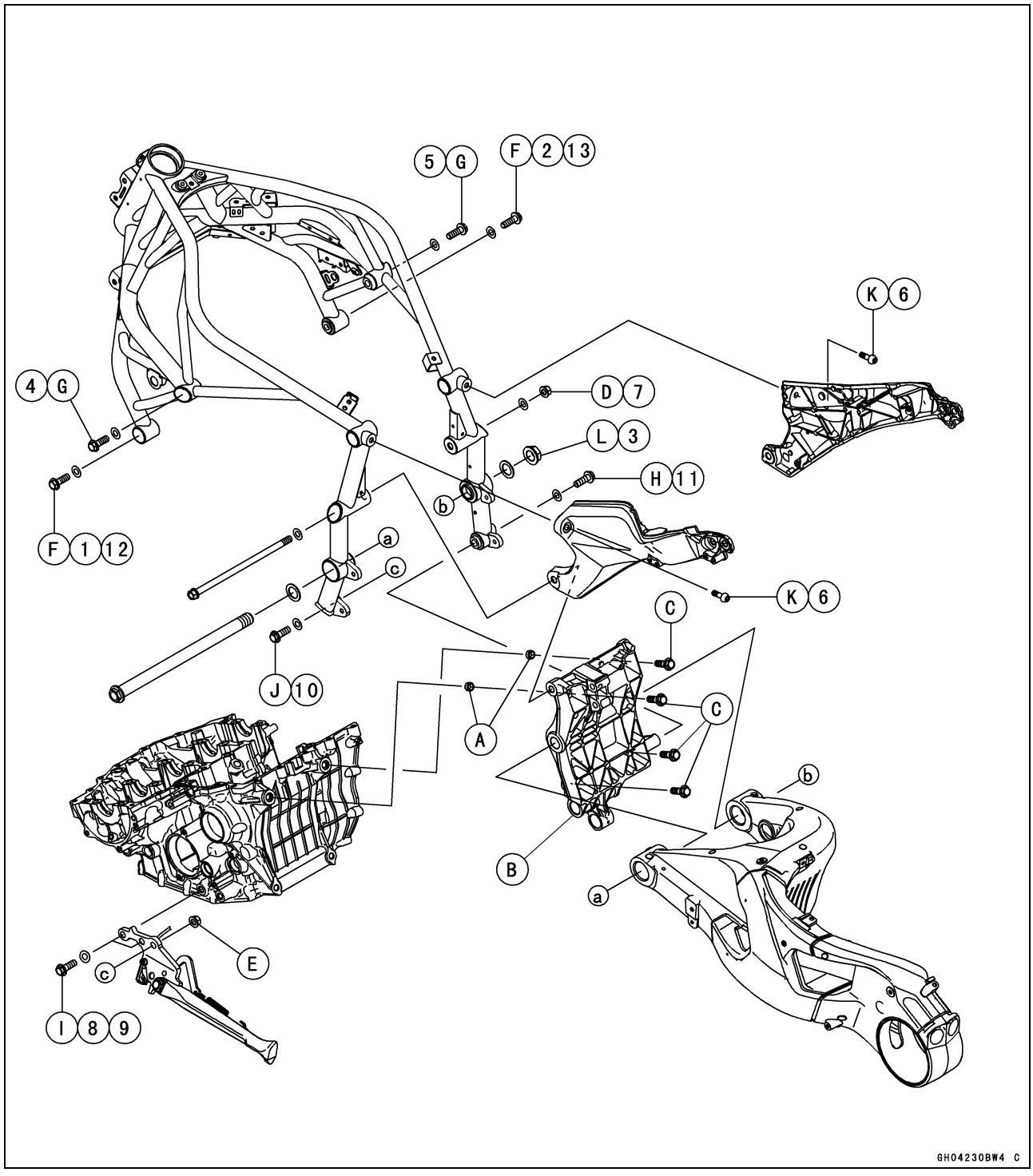

- Run the leads, cables and hoses correctly (see Cable, Wire, and Hose Routing section in the Appendix chapter).
- Install the removed parts (see appropriate chapters).
- Adjust:
  Throttle Cables (see Throttle Control System Inspection in the Periodic Maintenance chapter)
  Drive Chain (see Drive Chain Slack Inspection in the Periodic Maintenance chapter)
- Fill the engine with engine oil (see Engine Oil Change in the Periodic Maintenance chapter).
- Fill the engine with coolant (see Coolant Change in the Periodic Maintenance chapter).

Engine Removal/Installation

Swingarm Mounting Plate Removal

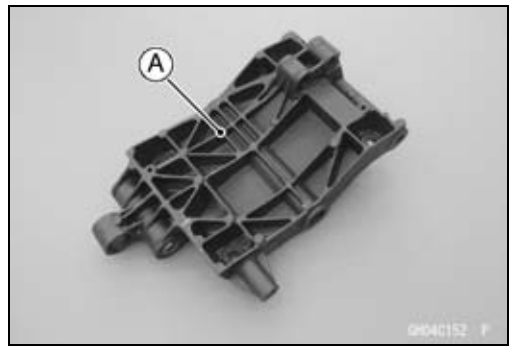

- Remove:
  Engine (see Engine Removal)
  Swingarm (see Swingarm Removal in the Suspension chapter)
- Remove the swingarm mounting plate [A] from the frame.

Swingarm Mounting Plate Installation

- Install the swingarm mounting plate, and tighten its bolts and nuts temporarily.
- Install the swingarm (see Swingarm Installation in the Suspension chapter).

○Tighten the swingarm pivot shaft nut temporarily.

- Install the engine (see Engine Installation).

Crankshaft/Transmission

Table of Contents

Exploded View 9-2
Specifications 9-6
Special Tools and Sealants 9-9
Crankcase 9-10
  Crankcase Splitting 9-10
  Crankcase Assembly 9-11
Crankshaft and Connecting Rods 9-17
  Crankshaft Removal 9-17
  Crankshaft Installation 9-17
  Connecting Rod Removal 9-18
  Connecting Rod Installation 9-19
  Crankshaft/Connecting Rod Cleaning 9-22
  Connecting Rod Bend Inspection 9-22
  Connecting Rod Twist Inspection. 9-23
  Connecting Rod Big End Side Clearance Inspection 9-23
  Connecting Rod Big End Bearing Insert/Crankpin Wear Inspection 9-23
  Crankshaft Side Clearance Inspection 9-25
  Crankshaft Runout Inspection 9-25
  Crankshaft Main Bearing Insert/Journal Wear Inspection . 9-26
Pistons 9-28
  Piston Removal 9-28
  Piston Installation 9-29
  Cylinder (Upper Crankcase) Wear Inspection 9-30
  Piston Wear Inspection 9-30
  Piston Ring, Piston Ring Groove Wear Inspection 9-30
  Piston Ring Groove Width Inspection 9-31
  Piston Ring Thickness Inspection 9-31
  Piston Ring End Gap Inspection .. 9-31
Balancer 9-32
  Front Balancer Removal 9-32
  Front Balancer Installation 9-32
  Rear Balancer Removal 9-34
  Rear Balancer Installation 9-34
  Balancer Adjustment 9-37
  Balancer Damper Inspection 9-38
Starter Motor Clutch and Torque Limiter 9-39
  Starter Motor Clutch Removal 9-39
  Starter Motor Clutch Installation ... 9-39
  Starter Motor Clutch Disassembly 9-39
  Starter Motor Clutch Assembly 9-40
  Starter Motor Clutch Damper Inspection 9-41
  Starter Clutch Inspection 9-41
  Torque Limiter Removal 9-41
  Torque Limiter Installation 9-41
Transmission 9-42
  Transmission Assy Removal 9-42
  Transmission Assy Disassembly . 9-43
  Transmission Assy Assembly 9-44
  Transmission Assy Installation 9-45
  Transmission Shaft Removal 9-46
  Transmission Shaft Installation 9-46
  Transmission Shaft Disassembly . 9-46
  Shift Drum and Fork Removal 9-46
  Shift Drum and Fork Installation ... 9-47
  Shift Drum Disassembly/Assembly 9-47
  Shift Fork Bending Inspection 9-47
  Shift Fork/Shifter Groove Wear Inspection 9-47
  Shift Fork Guide Pin/Drum Groove Wear Inspection 9-47
External Shift Mechanism 9-48
  Shift Pedal Removal 9-48
  Shift Pedal Installation 9-49
  External Shift Mechanism Removal 9-51
  External Shift Mechanism Installation 9-51
  External Shift Mechanism Inspection 9-52

Exploded View

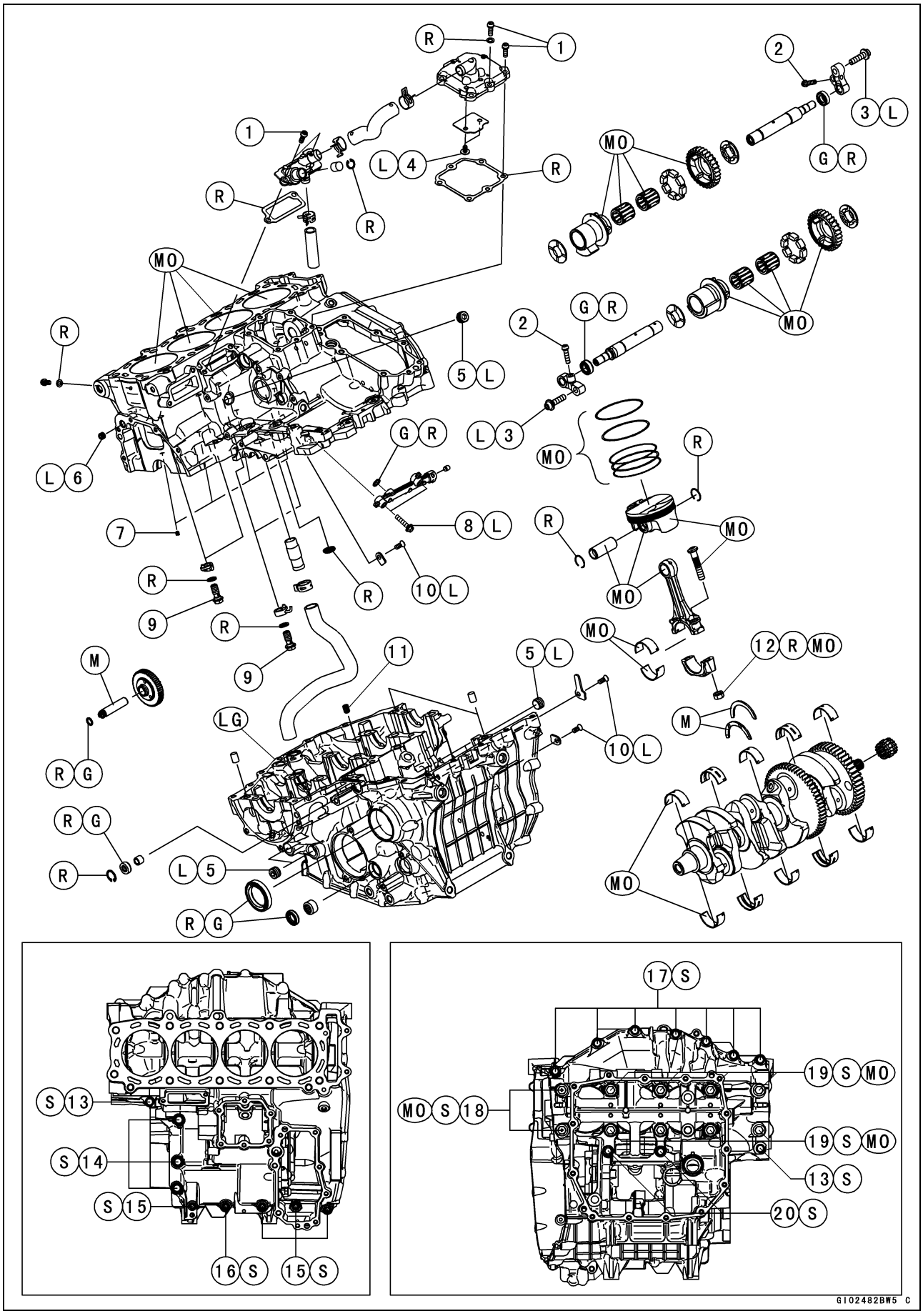

Exploded View

No.	Fastener	Torque			Remarks
		N·m	kgf·m	ft·lb	
1	Breather Cover Bolts	10	1.0	89 in·lb	
2	Balancer Shaft Clamp Bolts	10	1.0	89 in·lb	
3	Balancer Shaft Clamp Lever Bolts	33	3.4	24	L
4	Breather Plate Bolts	10	1.0	89 in·lb	L
5	Oil Passage Plugs	20	2.0	15	L
6	Crankcase Oil Nozzle	10	1.0	89 in·lb	L
7	Oil Nozzles (M5)	3.0	0.31	27 in·lb	
8	Transmission Oil Nozzle Pipe Bolts	10	1.0	89 in·lb	L
9	Crankcase Oil Nozzle Bolts	25	2.5	18	
10	Bearing Holder Screws	10	1.0	89 in·lb	L
11	Oil Nozzle (M8)	5.0	0.51	44 in·lb	
12	Connecting Rod Big End Nuts	see the text	←	←	MO, R
13	Crankcase Bolts (M7, L = 60 mm)	20	2.0	15	S
14	Crankcase Bolts (M8)	27	2.8	20	S
15	Crankcase Bolts (M6, L = 40 mm)	12	1.2	106 in·lb	S
16	Crankcase Bolt (M6, L = 30 mm)	12	1.2	106 in·lb	S
17	Crankcase Bolts (M7, L = 45 mm)	20	2.0	15	S
18	Crankcase Bolts (M10, L = 120 mm), First	12	1.2	106 in·lb	MO, S
	Crankcase Bolts (M10, L = 120 mm), Final	48	4.9	35	MO, S
19	Crankcase Bolts (M10, L = 100 mm), First	12	1.2	106 in·lb	MO, S
	Crankcase Bolts (M10, L = 100 mm), Final	48	4.9	35	MO, S
20	Crankcase Bolts (M7, L = 85 mm)	20	2.0	15	S

G: Apply grease.
L: Apply a non-permanent locking agent.
LG: Apply liquid gasket.
M: Apply molybdenum disulfide grease.
MO: Apply molybdenum disulfide oil solution.
(mixture of the engine oil and molybdenum disulfide grease in a weight ratio 10:1)
R: Replacement Parts
S: Follow the specified tightening sequence.

Exploded View

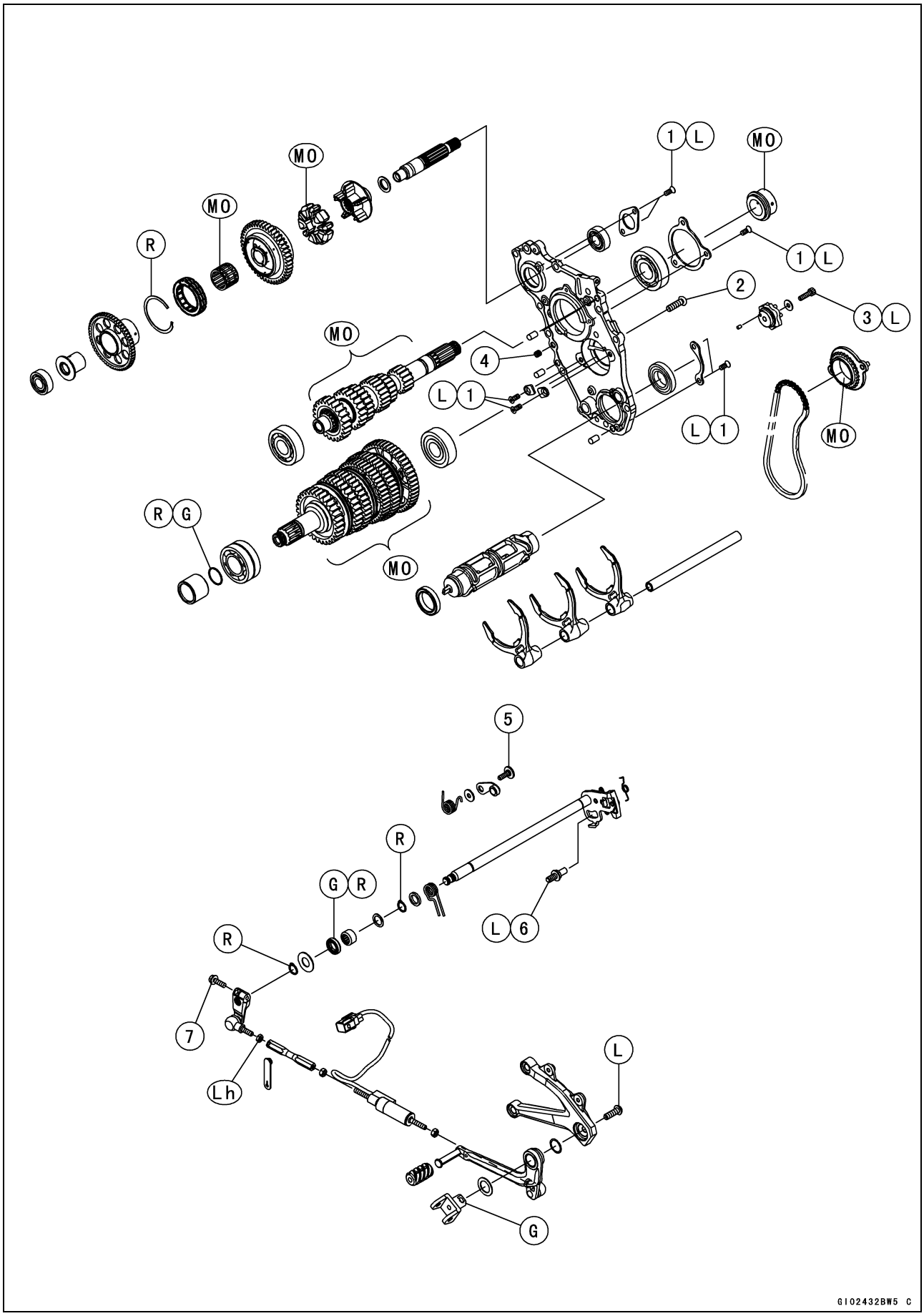

Exploded View

No.	Fastener	Torque			Remarks
		N·m	kgf·m	ft·lb	
1	Bearing Holder Screws	10	1.0	89 in·lb	L
2	Transmission Case Bolts	20	2.0	15	
3	Shift Drum Cam Holder Bolt	12	1.2	106 in·lb	L
4	Oil Nozzles (M8)	5.0	0.51	44 in·lb	
5	Gear Positioning Lever Bolt	12	1.2	106 in·lb	
6	Shift Shaft Return Spring Pin	29	3.0	21	L
7	Shift Lever Clamp Bolt	9.8	1.0	87 in·lb	

G: Apply grease.
L: Apply a non-permanent locking agent.
Lh: Left-hand Threads
MO: Apply molybdenum disulfide oil solution.
(mixture of the engine oil and molybdenum disulfide grease in a weight ratio 10:1)
R: Replacement Parts

Specifications

Item	Standard	Service Limit
Crankcase, Crankshaft, Connecting Rods		
Connecting Rod Bend	– – –	TIR 0.2/100 mm (0.008/3.94 in.)
Connecting Rod Twist	– – –	TIR 0.2/100 mm (0.008/3.94 in.)
Connecting Rod Big End Side Clearance	0.13 ~ 0.38 mm (0.0051 ~ 0.0150 in.)	0.6 mm (0.02 in.)
Connecting Rod Big End Bearing Insert/Crankpin Clearance	0.030 ~ 0.060 mm (0.0012 ~ 0.0024 in.)	0.10 mm (0.0039 in.)
Crankpin Diameter:	34.484 ~ 34.500 mm (1.3576 ~ 1.3583 in.)	34.47 mm (1.357 in.)
Marking:		
None	34.484 ~ 34.492 mm (1.3576 ~ 1.35795 in.)	– – –
○	34.493 ~ 34.500 mm (1.35799 ~ 1.3583 in.)	– – –
Connecting Rod Big End Inside Diameter:	37.500 ~ 37.516 mm (1.4764 ~ 1.4770 in.)	37.54 mm (1.478 in.)
Marking:		
None	37.500 ~ 37.508 mm (1.4764 ~ 1.47669 in.)	– – –
○	37.509 ~ 37.516 mm (1.47673 ~ 1.4770 in.)	– – –
Connecting Rod Big End Bearing Insert Thickness:		
Brown	1.478 ~ 1.483 mm (0.05819 ~ 0.05839 in.)	– – –
Black	1.483 ~ 1.488 mm (0.05839 ~ 0.05858 in.)	– – –
Blue	1.488 ~ 1.493 mm (0.05858 ~ 0.05878 in.)	– – –
Connecting Rod Bolt Stretch	(Usable Range)	
	0.28 ~ 0.38 mm (0.0110 ~ 0.0150 in.)	– – –
Crankshaft Side Clearance	0.05 ~ 0.25 mm (0.0020 ~ 0.0098 in.)	0.45 mm (0.0177 in.)
Crankshaft #3 Main Journal Width	23.49 ~ 23.54 mm (0.925 ~ 0.927 in.)	– – –
Crankshaft Runout	TIR 0.03 mm (0.001 in.) or less	TIR 0.08 mm (0.003 in.)
Crankshaft Main Bearing Insert/Journal Clearance	0.010 ~ 0.034 mm (0.0004 ~ 0.0013 in.)	0.06 mm (0.0024 in.)
Crankshaft Main Journal Diameter	37.984 ~ 38.000 mm (1.4954 ~ 1.4961 in.)	37.96 mm (1.4945 in.)
Marking:		
None	37.984 ~ 37.992 mm (1.4954 ~ 1.49575 in.)	– – –
1	37.993 ~ 38.000 mm (1.49578 ~ 1.4961 in.)	– – –
Crankcase Main Bearing Inside Diameter:	41.000 ~ 41.016 mm (1.6142 ~ 1.6148 in.)	– – –
Marking		
○	41.000 ~ 41.008 mm (1.6142 ~ 1.61448 in.)	– – –
None	41.009 ~ 41.016 mm (1.61452 ~ 1.6148 in.)	– – –

Specifications

Item	Standard	Service Limit
Crankshaft Main Bearing Insert Thickness:		
Brown	1.491 ~ 1.495 mm (0.05870 ~ 0.05886 in.)	– – –
Black	1.495 ~ 1.499 mm (0.05886 ~ 0.05902 in.)	– – –
Blue	1.499 ~ 1.503 mm (0.05902 ~ 0.05917 in.)	– – –
Cylinders, Pistons		
Cylinder Inside Diameter	75.994 ~ 76.006 mm (2.9919 ~ 2.9924 in.)	76.09 mm (2.996 in.)
Piston Diameter	75.939 ~ 75.954 mm (2.9897 ~ 2.9903 in.)	75.79 mm (2.984 in.)
Piston/Cylinder Clearance	0.040 ~ 0.067 mm (0.0016 ~ 0.0026 in.)	– – –
Piston Ring/Groove Clearance:		
Top	0.030 ~ 0.070 mm (0.00118 ~ 0.00276 in.)	0.17 mm (0.0067 in.)
Second	0.030 ~ 0.070 mm (0.00118 ~ 0.00276 in.)	0.17 mm (0.0067 in.)
Piston Ring Groove Width:		
Top	0.82 ~ 0.84 mm (0.0323 ~ 0.0331 in.)	0.92 mm (0.0362 in.)
Second	0.82 ~ 0.84 mm (0.0323 ~ 0.0331 in.)	0.92 mm (0.0362 in.)
Piston Ring Thickness:		
Top	0.770 ~ 0.790 mm (0.0303 ~ 0.0311 in.)	0.70 mm (0.028 in.)
Second	0.770 ~ 0.790 mm (0.0303 ~ 0.0311 in.)	0.70 mm (0.028 in.)
Piston Ring End Gap:		
Top	0.175 ~ 0.275 mm (0.0069 ~ 0.0108 in.)	0.6 mm (0.02 in.)
Second	0.325 ~ 0.425 mm (0.0128 ~ 0.0167 in.)	0.7 mm (0.03 in.)
Transmission		
Shift Fork Ear Thickness	3.4 ~ 3.5 mm (0.13 ~ 0.14 in.)	3.3 mm (0.13 in.)
Shifter Groove Width	3.55 ~ 3.65 mm (0.140 ~ 0.144 in.)	3.8 mm (0.15 in.)
Shift Fork Guide Pin Diameter	6.9 ~ 7.0 mm (0.27 ~ 0.28 in.)	6.8 mm (0.27 in.)
Shift Drum Groove Width	7.05 ~ 7.20 mm (0.278 ~ 0.283 in.)	7.3 mm (0.29 in.)

Specifications

Connecting Rod Big End Bearing Insert Selection

Con-rod Big End Inside Diameter Marking	Crankpin Diameter Marking	Bearing Insert	
		Size Color	Part Number
None	○	Brown	92139-0820
None	None	Black	92139-0819
○	○		
○	None	Blue	92139-0818

Crankshaft Main Bearing Insert Selection

Crankcase Main Bearing Inside Diameter Marking	Crankshaft Main Journal Diameter Marking	Bearing Insert*		
		Size Color	Part Number	Journal Nos.
○	1	Brown	92139-0823	1, 3, 5
			92139-0826	2, 4
None	1	Black	92139-0822	1, 3, 5
			92139-0825	2, 4
○	None	Black	92139-0822	1, 3, 5
			92139-0825	2, 4
None	None	Blue	92139-0821	1, 3, 5
			92139-0824	2, 4

*: The bearing inserts for Nos. 2 and 4 journals have an oil groove, respectively.

Special Tools and Sealants

Inside Circlip Pliers:
57001-143

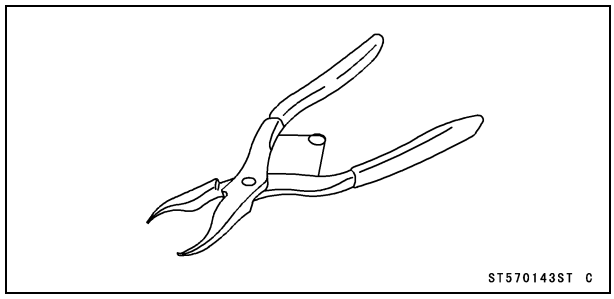

Outside Circlip Pliers:
57001-144

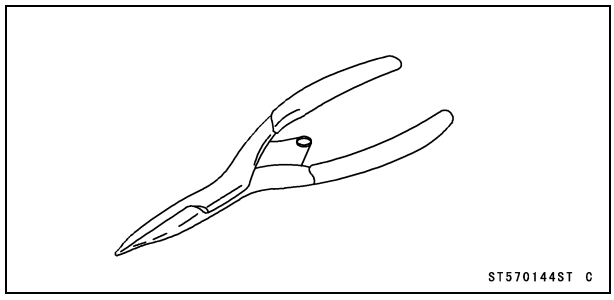

Piston Pin Puller Assembly:
57001-910

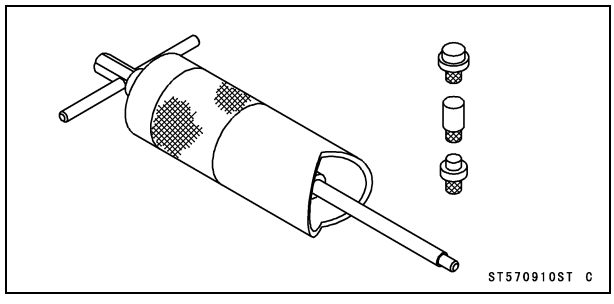

Piston Ring Compressor Grip:
57001-1095

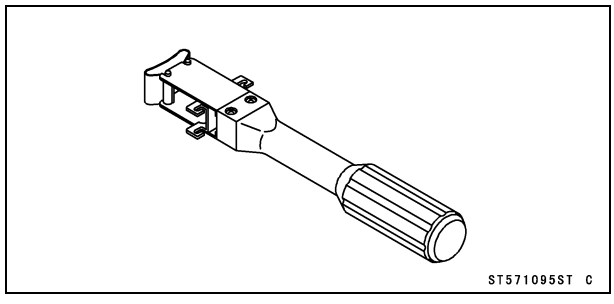

Piston Ring Compressor Belt, ϕ67 ~ ϕ79:
57001-1097

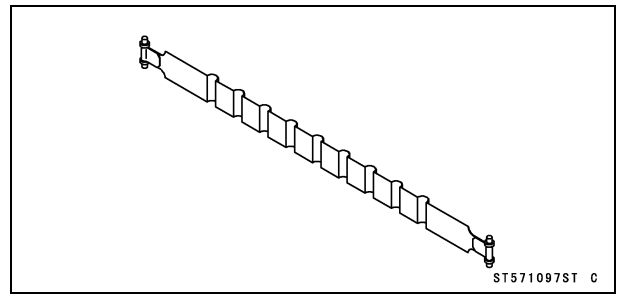

Bearing Driver Set:
57001-1129

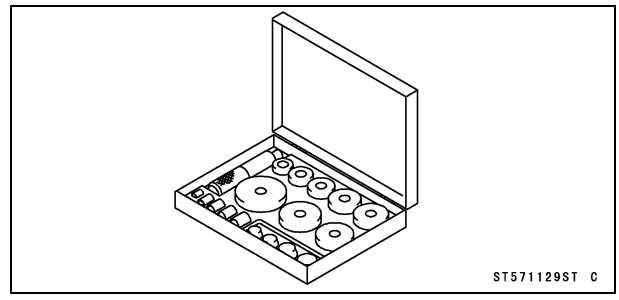

Liquid Gasket, TB1216B:
92104-1064

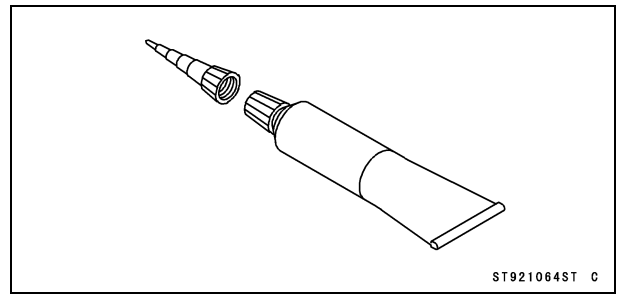

Crankcase

Crankcase Splitting

- Remove the engine (see Engine Removal in the Engine Removal/Installation chapter).
- Set the engine on a clean surface and hold the engine steady while parts are being removed.
- Remove:
  Cylinder Head (see Cylinder Head Removal in the Engine Top End chapter)
  Clutch (see Clutch Removal in the Clutch chapter)
  Supercharger (see Supercharger Removal in the Fuel System (DFI) chapter)
  Rear Balancer (see Rear Balancer Removal)
  Starter Motor (see Starter Motor Removal in the Electrical System chapter)
  Transmission Assy (see Transmission Assy Removal)
  Alternator Rotor (see Alternator Rotor Removal in the Electrical System chapter)
  Oil Pump (see Oil Pump Removal in the Engine Lubrication System chapter)
  Oil Cooler (see Oil Cooler Removal in the Engine Lubrication System chapter)
  Oil Filter (see Oil Filter Replacement in the Periodic Maintenance chapter)
  Oil Pan (see Oil Pan Removal in the Engine Lubrication System chapter)
  Oil Screen (see Oil Screen Removal in the Engine Lubrication System chapter)

- Side the clamp [A].
- Remove the oil pipe [B].

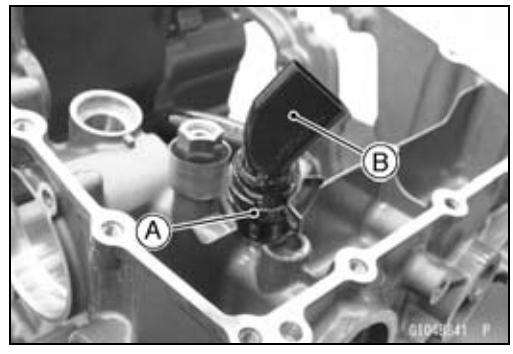

- Remove:
  Bearing Holder Bolt [A]
  Bearing Holder [B]

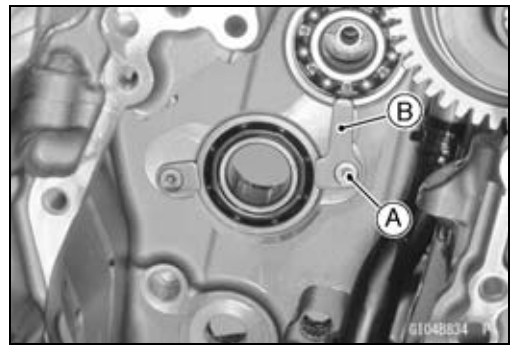

Crankcase

- Remove the upper crankcase bolts, following the specified sequence.

○Firstly, loosen the M6 bolts [A].
○Secondly, loosen the M7 bolt [B].
○Lastly, loosen the M8 bolts [C].

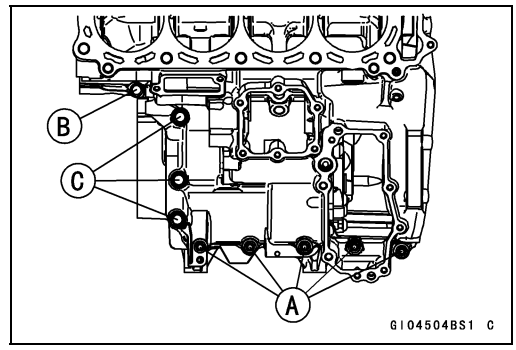

- Remove the lower crankcase bolts, following the specified sequence.

○Firstly, loosen the M7 bolts [A].
○Lastly, loosen the M10 bolts as shown sequence [1 ~ 10].

- Tap lightly around the crankcase mating surface with a plastic mallet, and split the crankcase.

○Take care not to damage the crankcase.

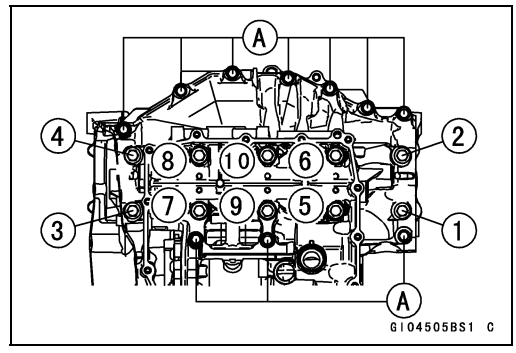

Crankcase Assembly

NOTICE
The upper and lower crankcase halves are machined at the factory in the assembled state, so the crankcase halves must be replaced as a set.

- With a high flash-point solvent, clean off the mating surfaces of the crankcase halves and wipe dry.

⚠ WARNING
Gasoline and low flash-point solvents can be flammable and/or explosive and cause severe burns. Clean the crankcase in a well-ventilated area, and take care that there are no sparks or flame anywhere near the working area; this includes any appliance with a pilot light. Do not use gasoline or a low flash-point solvent to clean the crankcase.

- Using compressed air, blow out the oil passages in the crankcase halves.

Upper Crankcase Assembly

- Press the fitting [A] until it is bottomed.

Special Tool - Bearing Driver Set: 57001-1129

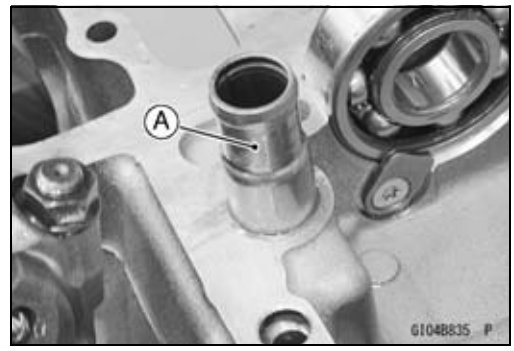

Crankcase

● Install the clamp and breather hose [A] as shown.
○Face the knob [B] of the clamp to the left side [C].

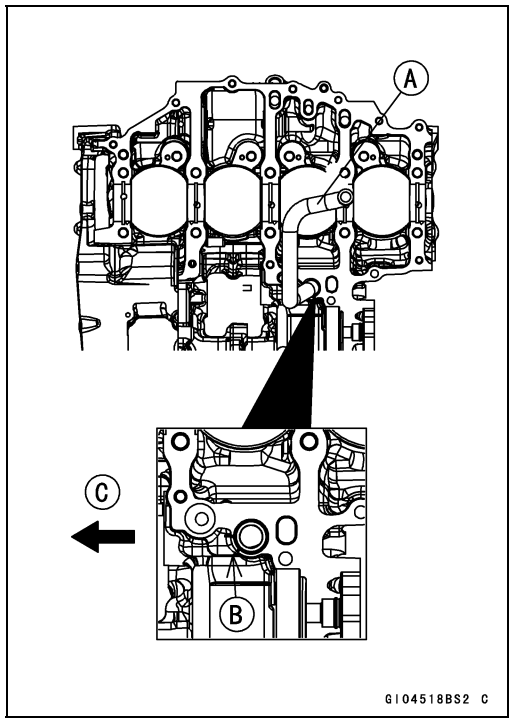

● Press the new ball bearing [A] until it is bottomed.
○Face the oil seal side of the bearing to the bottom.

Special Tool - Bearing Driver Set: 57001-1129

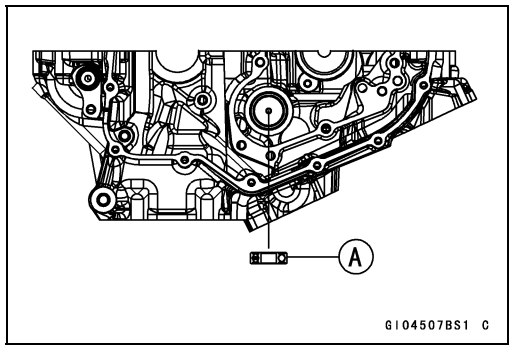

● Replace the O-ring [A] with a new one.
● Apply grease to the new O-ring.
○Apply a small amount of grease to the O-ring so that grease should not close the oil hole of the transmission oil nozzle pipe.
● Apply a non-permanent locking agent to the threads of the transmission oil nozzle pipe bolts.
● Tighten:

Torque - Transmission Oil Nozzle Pipe Bolts: 10 N·m (1.0 kgf·m, 89 in·lb)

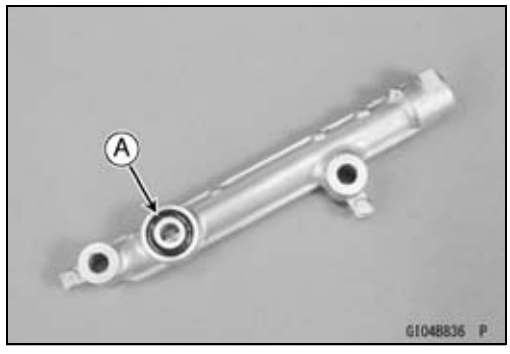

● Replace the washers with new ones.
● Insert the pin [A] to the hole [B].
● Tighten the crankcase oil nozzle bolt with the washer.

Torque - Crankcase Oil Nozzle Bolt: 25 N·m (2.5 kgf·m, 18 ft·lb)

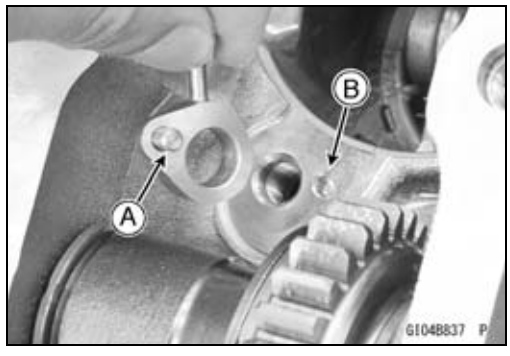

Crankcase

- Install the bearing [A].

○Face the oil seal side of the bearing to the outside of the engine.

- Install the bearing holder [B] so that the tapered side faces outside.
- Apply a non-permanent locking agent to the threads of the bearing holder screw [C].
- Tighten:

Torque - Bearing Holder Screw: 10 N·m (1.0 kgf·m, 89 in·lb)

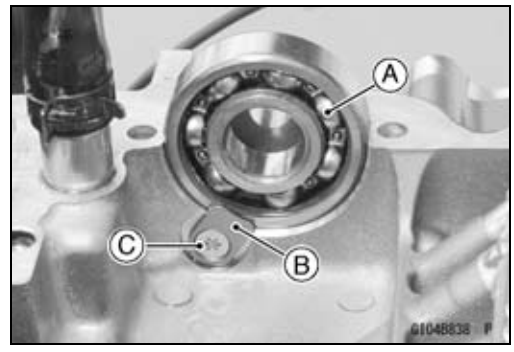

- Install the removed parts from the upper crankcase (see appropriate chapters).

Lower Crankcase Assembly

- Press the new ball bearing [A] until it is bottomed.

○Face the marked side of the bearing to the engine inside.

Special Tool - Bearing Driver Set: 57001-1129

- Install the bearing holder [B] so that the tapered side faces engine inside.
- Apply a non-permanent locking agent to the threads of the bearing holder screw [C].
- Tighten:

Torque - Bearing Holder Screw: 10 N·m (1.0 kgf·m, 89 in·lb)

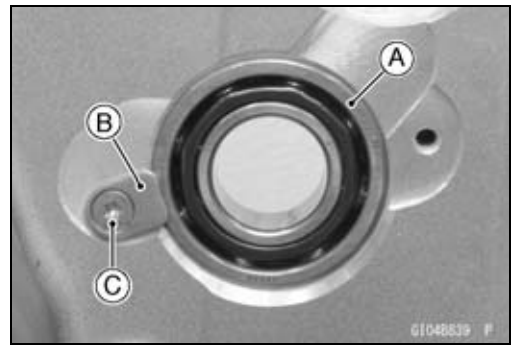

- Install the new oil seal [A] so that its surface [B] is flush with the end of the hole.

Special Tool - Bearing Driver Set: 57001-1129

- Apply grease to the oil seal lips.
- Press the new needle bearing [C] for the shift shaft so that its marked side faces outside and its surface [D] are flush with the end of the hole.

Special Tool - Bearing Driver Set: 57001-1129

- Install the new oil seal [E] so that its surface [F] is flush with the end of the hole.

Special Tool - Bearing Driver Set: 57001-1129

- Apply grease to the oil seal lips.

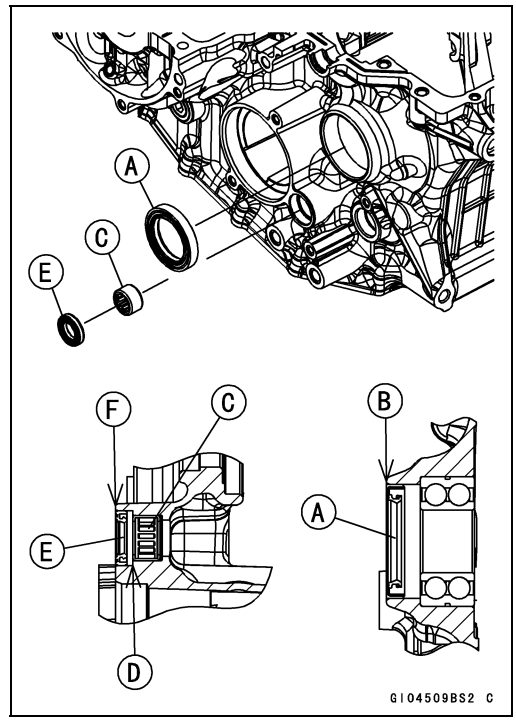

Crankcase

Crankcase Halves Assembly

- Replace the O-ring [A] with a new one.
- Install the O-ring to the upper crankcase [B] as shown.
- Install the dowel pins [C].

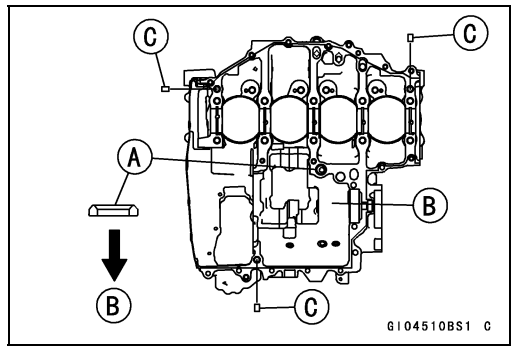

- Using a high flash-point solvent, clean off any oil or dirt that may be on the liquid gasket coating area. Dry them with a clean cloth.
- Apply liquid gasket [A] to the mating surface of the lower crankcase half.

Sealant - Liquid Gasket, TB1216B: 92104-1064

NOTE

○*Do not apply liquid gasket to the inside of the grooves [B].*

○*When the liquid gasket is applied to the parts, finish the part assembling before the liquid gasket starts curing (within 20 minutes after the liquid gasket is applied).*

○*Moreover fit the case and tighten the bolts just after application of the liquid gasket.*

NOTICE
Do not apply liquid gasket around the crankshaft main bearing inserts and oil passage.

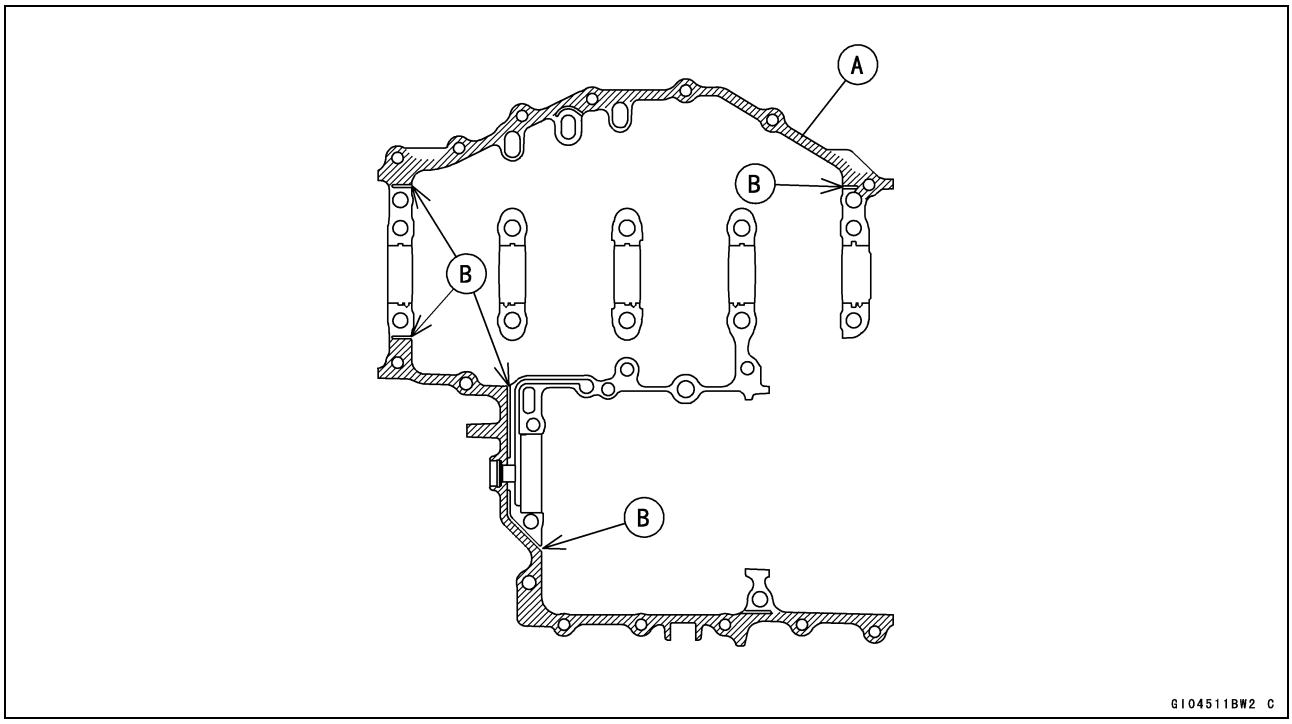

Crankcase

- Run the breather hose [A] into the hole [B] of the lower crankcase.
- Fit the lower crankcase half to the upper crankcase half.

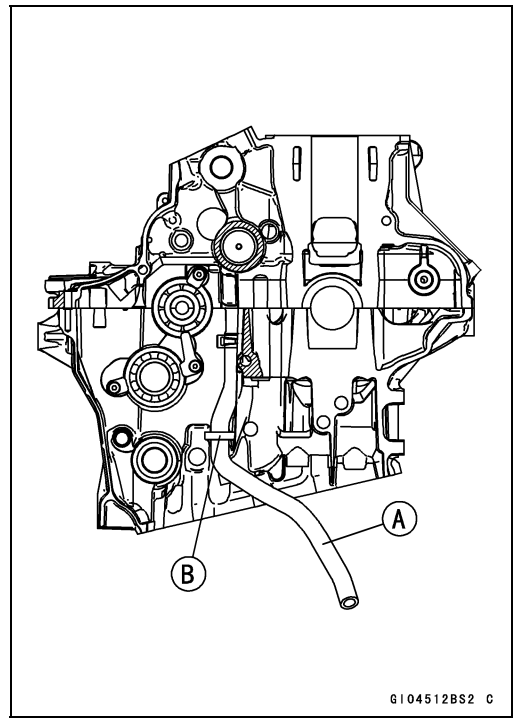

- The M10 bolts [A] has a copper plated washers [B], replace them with new ones.
- Apply molybdenum disulfide oil solution to both sides [C] of the washers and threads [D] of M10 bolts.

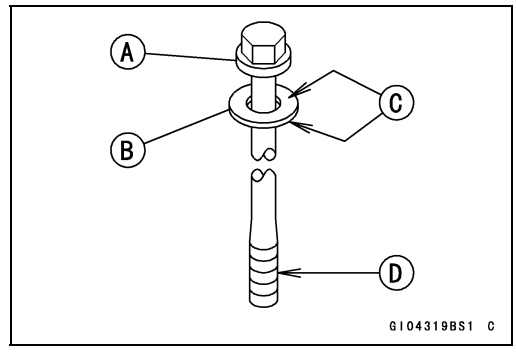

- Tighten the lower crankcase bolts using the following steps.

○Following the sequence numbers on the lower crankcase half, tighten M10 bolts [1 ~ 10] with copper plated washers.

L = 100 mm (3.9 in.) [1 ~ 6, 9, 10]
L = 120 mm (4.7 in.) [7 ~ 8]

Torque - Crankcase Bolts (M10):
First: 12 N·m (1.2 kgf·m, 106 in·lb)
Final: 48 N·m (4.9 kgf·m, 35 ft·lb)

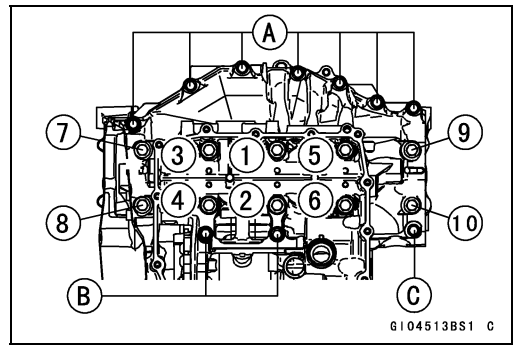

○Tighten the M7 bolts.

L = 45 mm (1.8 in.) [A]
L = 85 mm (3.3 in.) [B]
L = 60 mm (2.4 in.) [C]

Torque - Crankcase Bolts (M7): 20 N·m (2.0 kgf·m, 15 ft·lb)

Crankcase

● Tighten the upper crankcase bolts using the following steps.
○Replace the M8 bolt washers [A] with new ones.
○Tighten the M8 bolts with washers.

Torque - Crankcase Bolts (M8): 27 N·m (2.8 kgf·m, 20 ft·lb)

○Tighten the M7 bolt [B].
L = 60 mm (2.4 in.)

Torque - Crankcase Bolt (M7): 20 N·m (2.0 kgf·m, 15 ft·lb)

○Tighten the M6 bolts.
L = 40 mm (1.6 in.) [C]
L = 30 mm (1.2 in.) [D]

Torque - Crankcase Bolts (M6): 12 N·m (1.2 kgf·m, 106 in·lb)

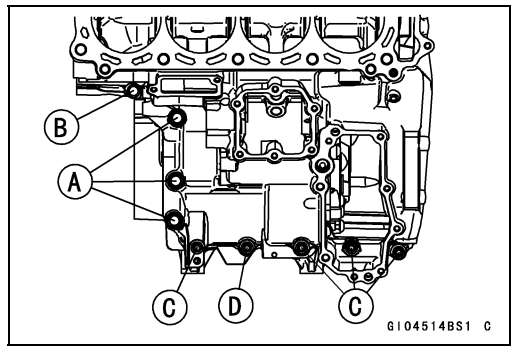

● After tightening all crankcase bolts, check the following items.
○Wipe up the liquid gasket that seeps out around the crankcase mating surface.
○Crankshaft turns freely.

● Install the bearing holder [A] so that the tapered side faces engine inside.
● Apply a non-permanent locking agent to the threads of the bearing holder screw [B].
● Tighten:

Torque - Bearing Holder Screw: 10 N·m (1.0 kgf·m, 89 in·lb)

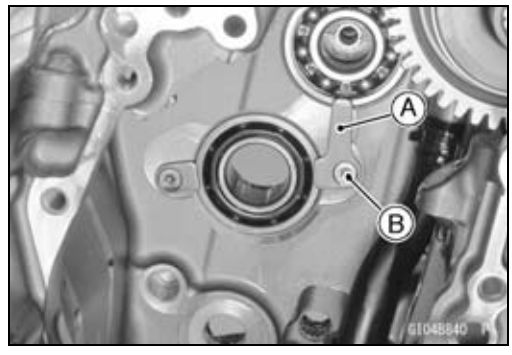

● Press the bushing [A] into crankcase so that its surface is flush [B] with the end of hole.

Special Tool - Bearing Driver Set: 57001-1129

● Replace the oil seal [C] with a new one.
● Press the oil seal so that its marked side faces outside.

Special Tool - Bearing Driver Set: 57001-1129

● Apply grease to the oil seal lips.
● Replace the circlip [D] with a new one.
● Install the circlip.

Special Tool - Inside Circlip Pliers: 57001-143

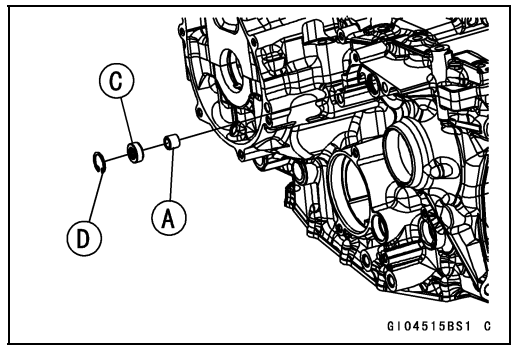

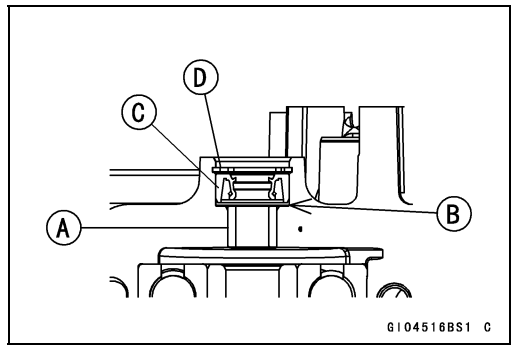

● Install the removed parts (see appropriate chapters).

Crankshaft and Connecting Rods

Crankshaft Removal

- Split the crankcase (see Crankcase Splitting).
- Remove:
  Connecting Rod Big End Nuts [A]
  Connecting Rod Big End Caps [B]

NOTE

○*Mark and record the locations of the connecting rods and their big end caps so that they can be reassembled in their original positions.*

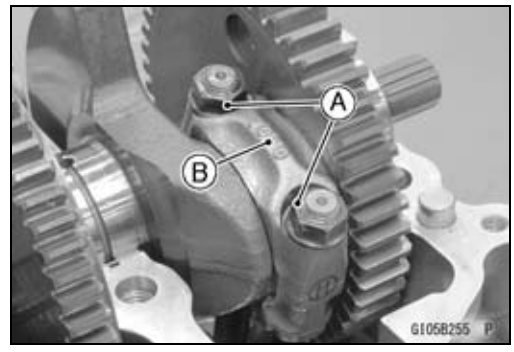

- Remove the crankshaft [A].

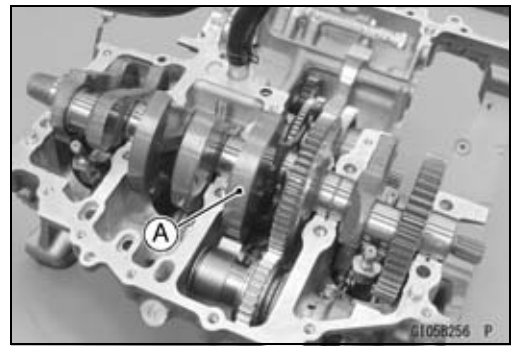

- Remove the thrust washers [A] from the #3 main journal of the upper crankcase half as follows.

○Slide the thrust washers upward and remove them.

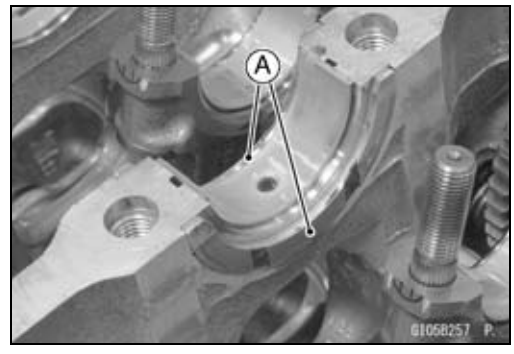

Crankshaft Installation

NOTE

○*If the crankshaft is replaced with a new one, refer to the Connecting Rod Big End Bearing/Crankshaft Main Bearing Insert Selection in the Specifications.*

NOTICE
If the crankshaft, bearing inserts, or crankcase halves are replaced with new ones, select the bearing inserts and check clearance with a plastigage (press gauge) before assembling engine to be sure the correct bearing inserts are installed.

Crankshaft and Connecting Rods

- Apply molybdenum disulfide oil solution to the crankshaft main bearing inserts.

NOTE

○*The thrust washer [A] has oil grooves [B] on the one side.*

○*The thrust washers are identical.*

- Apply molybdenum disulfide grease [C] to the oil groove side [D] of the thrust washers.
- Slide the thrust washer of the one side into the groove of the #3 main journal so that the oil grooves face outward.
- Move the crankshaft to the left or right, and then slide the thrust washer of the other side into the groove of the #3 main journal in the same way.
- After installation, confirm that the red-painted edges [E] of the thrust washers are positioned as shown.
  Front [F]
- Install the connecting rod big end caps (see Connecting Rod Installation).

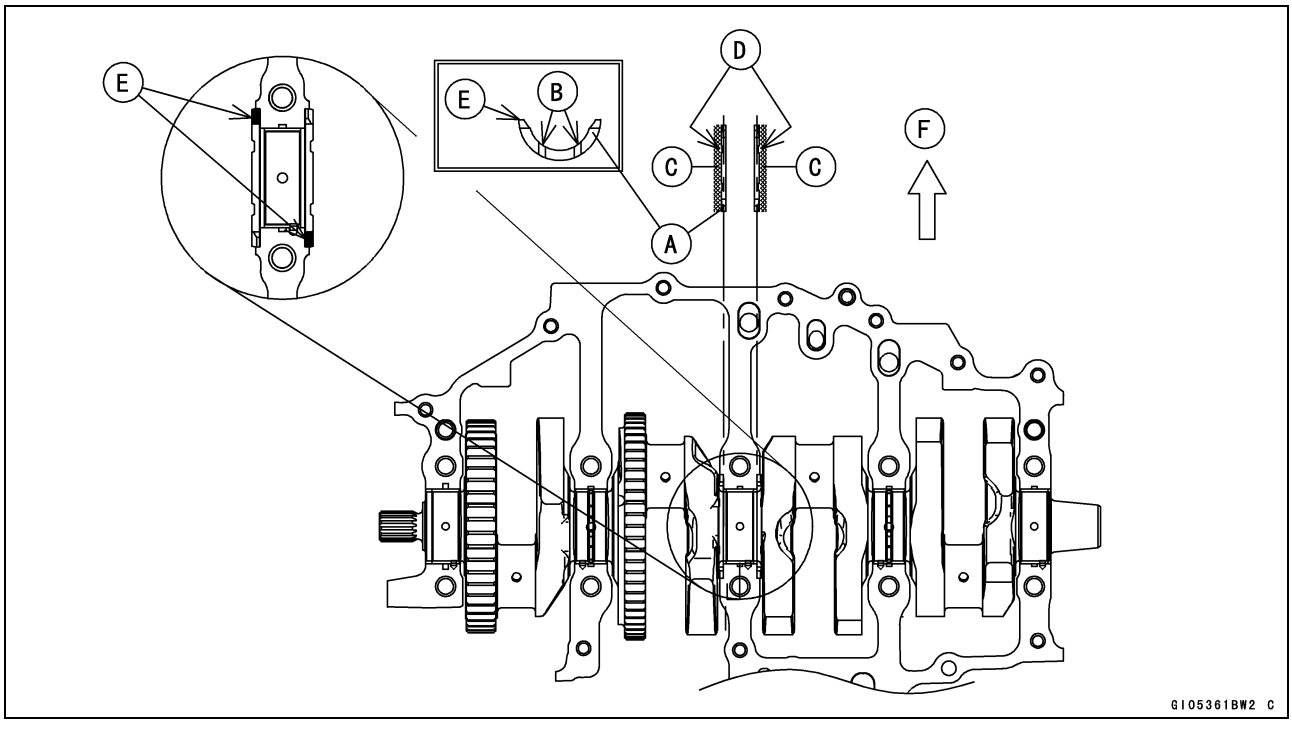

Connecting Rod Removal

- Refer to the Piston Removal.

Crankshaft and Connecting Rods

Connecting Rod Installation

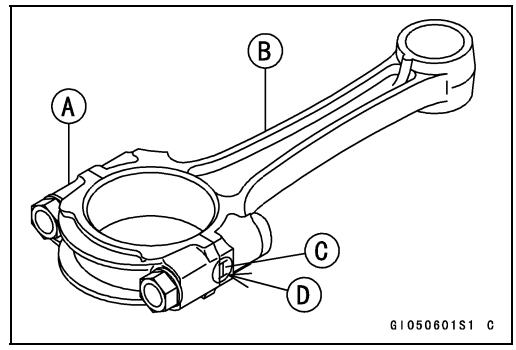

NOTE

○*If the crankshaft is replaced with a new one, refer to the Connecting Rod Big End Bearing/Crankshaft Main Bearing Insert Selection in the Specifications.*

NOTICE

To minimize vibration, the connecting rods should have the same weight mark.

Big End Cap [A]
Connecting Rod [B]
Weight Mark, Alphabet [C]
Diameter Mark [D]: "○" or no mark

NOTICE

If the connecting rods, big end bearing inserts, or crankshaft are replaced with new ones, select the bearing insert and check clearance with a plastigage (press gauge) before assembling engine to be sure the correct bearing inserts are installed.

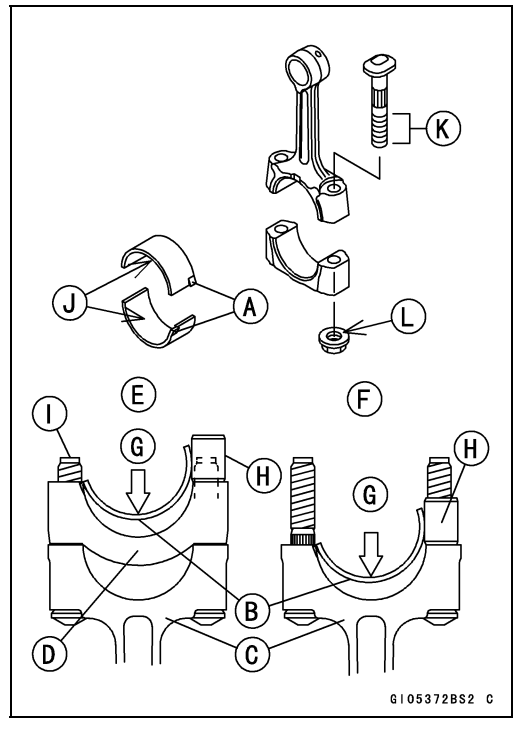

- Remove dust and clean the inserts installation surface of the connecting rod.
- Install the inserts so that their nails [A] are on the same side and fit them into the recess of the connecting rod and cap.
- When installing the inserts [B], be careful not to damage the insert surface with the edge of the connecting rod [C] or the cap [D]. One way to install inserts is as follows.
  Installation [E] to Cap
  Installation [F] to Connecting Rod
  Push [G]
  Spare Dowel Pin [H]
  Connecting Rod Bolts [I]
- Remove dust and clean the surface of the inserts.
- Apply molybdenum disulfide oil solution to the inner surface [J] of the upper and lower bearing inserts.

NOTICE

Wrong application of oil and grease could cause bearing damage. Be careful to part of the application.

- Apply molybdenum disulfide oil solution to the threads [K] and seating surface [L] of the connecting rod nuts.
- Install the crankshaft (see Crankshaft Installation).
- Install each connecting rod on its original crankpin, aligning the weight and diameter marks.

Crankshaft and Connecting Rods

○The connecting rod big end is bolted using the “plastic region fastening method.”
○This method precisely achieves the needed clamping force without exceeding it unnecessarily, allowing the use of thinner, lighter bolts further decreasing connecting rod weight.
○There are two types of the plastic region fastening. One is a bolt length measurement method and other is a rotation angle method. Observe one of the following two, but the bolt length measurement method is preferable because this is a more reliable way to tighten the big end nuts.

NOTICE

The connecting rod bolts are designed to stretch when tightened. Never reuse the connecting rod bolts. See the table below for correct bolt and nut usage.

NOTICE

Be careful not to overtighten the nuts.
The bolts must be positioned on the seating surface correctly to prevent the bolt heads from hitting the crankcase.

(1) Bolt Length Measurement Method
● Be sure to clean the bolts, nuts, and connecting rods thoroughly with a high flash-point solvent, because the new connecting rods, bolts, and nuts are treated with an anti-rust solution.

⚠ WARNING

Gasoline and low flash-point solvents can be flammable and/or explosive and cause severe burns. Clean the bolts, nuts, and connecting rods in a well-ventilated area, and take care that there are no sparks or flame anywhere near the working area; this includes any appliance with a pilot light. Do not use gasoline or a low flash-point solvent to clean them.

NOTICE

Immediately dry the bolts and nuts with compressed air after cleaning. Clean and dry the bolts and nuts completely.

Crankshaft and Connecting Rods

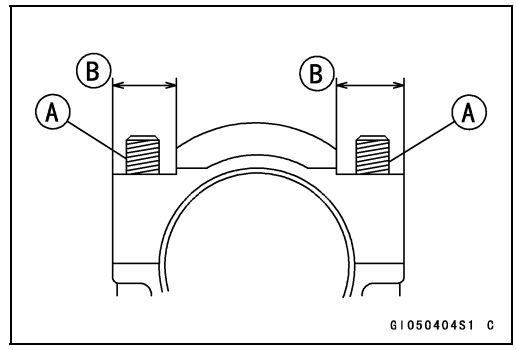

- Apply a small amount of molybdenum disulfide oil solution to the following portions.
  Threads [A] of Nuts and Bolts
  Seating Surfaces [B] of Nuts and Connecting Rods
- Install new bolts and nuts in reused connecting rod.

★If the connecting rod assembly was replaced, use the bolts and nuts attached to the new connecting rod assembly.

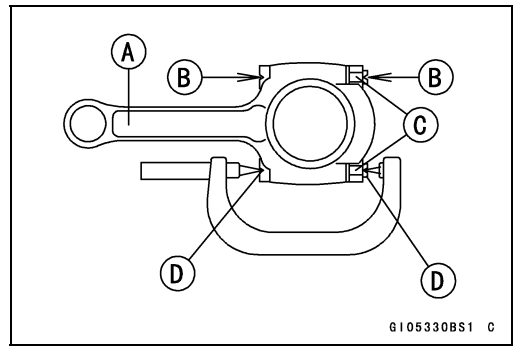

- Dent both bolt head and bolt tip with a punch as shown.
- Before tightening, use a point micrometer to measure the length of new connecting rod bolts and record the values to find the bolt stretch.
  Connecting Rod [A]
  Dent here with a punch [B].
  Nuts [C]
  Fit micrometer pins into dents [D].
- Tighten the big end nuts until the bolt elongation reaches the length specified as follows.

Bolt Length after tightening – Bolt Length before tightening = Bolt Stretch

Connecting Rod Bolt Stretch
Usable Range: 0.28 ~ 0.38 mm (0.0110 ~ 0.0150 in.)

- Check the length of the connecting rod bolts.

★If the stretch is more than the usable range, the bolt has stretched too much. An overelongated bolt may break in use.

(2) Rotation Angle Method

★If you don't have a point micrometer, you may tighten the nuts using the "Rotation Angle Method."

- Be sure to clean the bolts, nuts and connecting rods thoroughly with a high flash-point solvent, because the new connecting rods, bolts and nuts are treated with an anti-rust solution.

⚠ WARNING

Gasoline and low flash-point solvents can be flammable and/or explosive and cause severe burns. Clean the bolts, nuts, and connecting rods in a well-ventilated area, and take care that there are no sparks or flame anywhere near the working area; this includes any appliance with a pilot light. Do not use gasoline or a low flash-point solvent to clean them.

NOTICE

Immediately dry the bolts and nuts with compressed air after cleaning.
Clean and dry the bolts and nuts completely.

Crankshaft and Connecting Rods

- Apply a small amount of molybdenum disulfide oil solution to the following portions.
  Threads [A] of Nuts and Bolts
  Seating Surfaces [B] of Nuts and Connecting Rods
- Install new bolts and nuts in reused connecting rod.

★If the connecting rod assembly was replaced, use the bolts and nuts attached to the new connecting rod assembly.

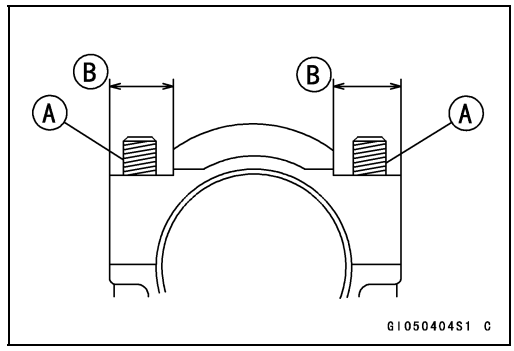

- First, tighten the nuts with **26 N·m (2.7 kgf·m, 19 ft·lb)** of torque.
- Next, tighten the nuts **135°**.

○Using a torque angle gauge [A], tighten the nuts specified angle.

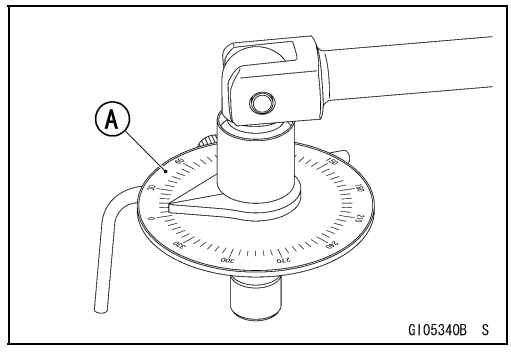

Connecting Rod Assy	Bolt	Nut	Torque + Angle N·m (kgf·m, ft·lb)
New	Attached to new con-rod	Attached to new con-rod	26 (2.7, 19) + 135°
	New	New	
Used	Replace the bolts with new ones	Replace the nuts with new ones	26 (2.7, 19) + 135°

Crankshaft/Connecting Rod Cleaning

- After removing the connecting rods from the crankshaft, clean them with a high flash-point solvent.
- Blow the crankshaft oil passages with compressed air to remove any foreign particles or residue that may have accumulated in the passages.

Connecting Rod Bend Inspection

- Remove the connecting rod big end bearing inserts, and reinstall the connecting rod big end cap.
- Select an arbor [A] of the same diameter as the connecting rod big end, and insert the arbor through the connecting rod big end.
- Select an arbor of the same diameter as the piston pin and at least 100 mm (3.94 in.) long, and insert the arbor [B] through the connecting rod small end.
- On a surface plate, set the big-end arbor on V block [C].
- With the connecting rod held vertically, use a height gauge to measure the difference in the height of the arbor above the surface plate over a 100 mm (3.94 in.) length to determine the amount of connecting rod bend.

★If the connecting rod bend exceeds the service limit, the connecting rod must be replaced.

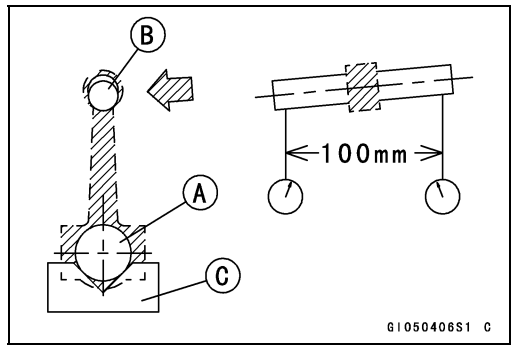

Connecting Rod Bend
Service Limit: TIR 0.2/100 mm (0.008/3.94 in.)

Crankshaft and Connecting Rods

Connecting Rod Twist Inspection

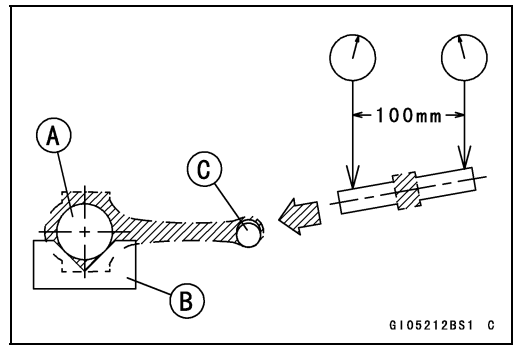

- With the big-end arbor [A] still on V block [B], hold the connecting rod horizontally and measure the amount that the arbor [C] varies from being paralleled with the surface plate over a 100 mm (3.94 in.) length of the arbor to determine the amount of connecting rod twist.

★If the connecting rod twist exceeds the service limit, the connecting rod must be replaced.

Connecting Rod Twist
Service Limit: TIR 0.2/100 mm (0.008/3.94 in.)

Connecting Rod Big End Side Clearance Inspection

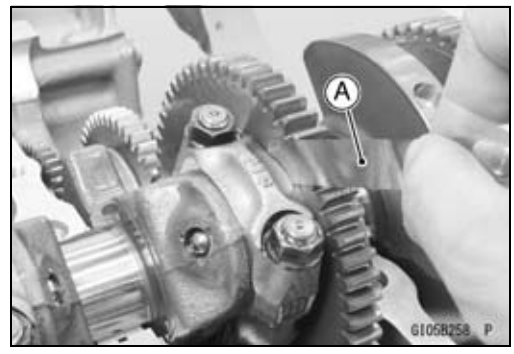

- Measure the connecting rod big end side clearance.

○Insert a thickness gauge [A] between the big end and either crank web to determine clearance.

Connecting Rod Big End Side Clearance
Standard: 0.13 ~ 0.38 mm (0.0051 ~ 0.0150 in.)
Service Limit: 0.6 mm (0.02 in.)

★If the clearance exceeds the service limit, replace the connecting rod with new one and then check clearance again. If the clearance is too large after connecting rod replacement, the crankshaft also must be replaced.

Connecting Rod Big End Bearing Insert/Crankpin Wear Inspection

- Remove the connecting rod big end (see Connecting Rod Removal).
- Cut strips of plastigage (press gauge) to crankpin width. Place a strip on the crankpin parallel to the crankshaft installed in the correct position.
- Tighten the connecting rod big end nuts to the specified torque (see Connecting Rod Installation).

NOTE

○*Do not move the connecting rod and crankshaft during clearance measurement.*

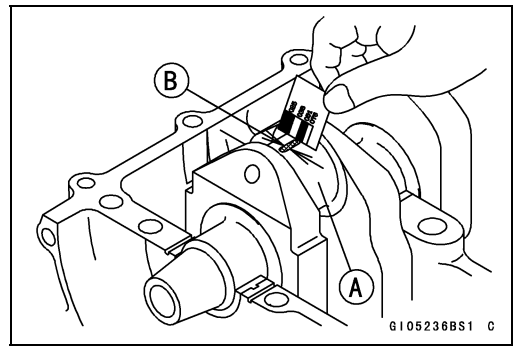

- Remove the connecting rod big end again, measure each clearance between the bearing insert and crankpin [A] using plastigage (press gauge) [B].

NOTICE
After measurement, replace the connecting rod bolts and nuts.

Connecting Rod Big End Bearing Insert/Crankpin Clearance
Standard: 0.030 ~ 0.060 mm (0.0012 ~ 0.0024 in.)
Service Limit: 0.10 mm (0.0039 in.)

Crankshaft and Connecting Rods

★If the clearance is within the standard, no bearing replacement is required.
★If the clearance is between 0.061 mm (0.0024 in.) and the service limit (0.10 mm, 0.0039 in.), replace the bearing inserts [A] with inserts painted blue [B]. Check insert/crankpin clearance with the plastigage. The clearance may exceed the standard slightly, but it must not be less than the minimum in order to avoid bearing seizure.
★If the clearance exceeds the service limit, measure the diameter of the crankpins.

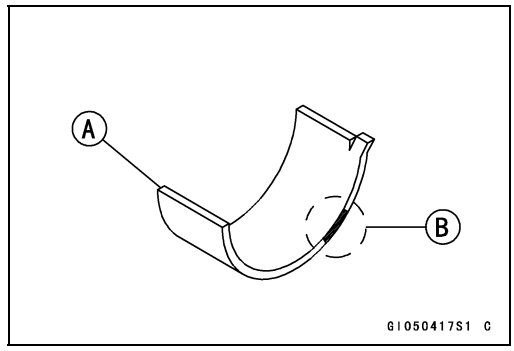

Crankpin Diameter
Standard: 34.484 ~ 34.500 mm (1.3576 ~ 1.3583 in.)
Service Limit: 34.47 mm (1.357 in.)

★If any crankpin has worn past the service limit, replace the crankshaft with a new one.
★If the measured crankpin diameters [A] are not less than the service limit, but do not coincide with the original diameter markings [B] on the crankshaft, make new markings on it.

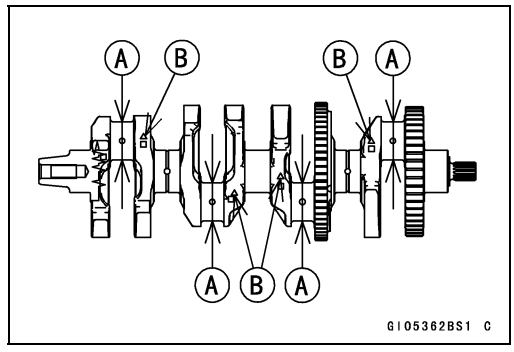

Crankpin Diameter Markings
None 34.484 ~ 34.492 mm (1.3576 ~ 1.35795 in.)
○ 34.493 ~ 34.500 mm (1.35799 ~ 1.3583 in.)
△: Crankpin Diameter Markings, "○" or no mark.

● Measure the connecting rod big end inside diameter, and mark each connecting rod big end in accordance with the inside diameter.
● Tighten the connecting rod big end nuts to the specified torque (see Connecting Rod Installation).

NOTE
○*The marking already on the big end should almost coincide with the measurement.*

Connecting Rod Big End Inside Diameter Markings
None 37.500 ~ 37.508 mm (1.4764 ~ 1.47669 in.)
○ 37.509 ~ 37.516 mm (1.47673 ~ 1.4770 in.)

Big End Cap [A]
Connecting Rod [B]
Weight Marking, Alphabet [C]
Diameter Marking (Around Weight Marking) [D]: "○" or no mark

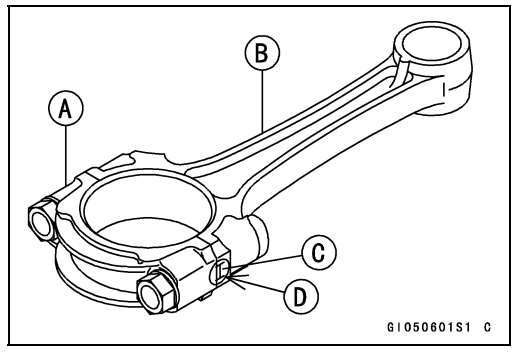

Crankshaft and Connecting Rods

● Select the proper bearing insert [A] in accordance with the combination of the connecting rod and crankshaft coding.
Size Color [B]

Con-rod Big End Inside Diameter Marking	Crankpin Diameter Marking	Bearing Insert	
		Size Color	Part Number
None	○	Brown	92139-820
None	None	Black	92139-819
○	○		
○	None	Blue	92139-818

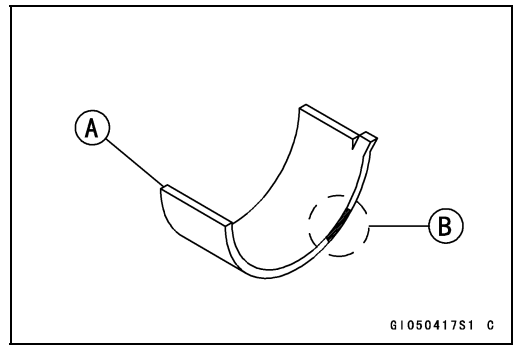

● Install the new inserts in the connecting rod and check insert/crankpin clearance with the plastigage.

Crankshaft Side Clearance Inspection

● Insert a thickness gauge [A] between the thrust washer [B] on the crankcase and the crank web [C] at the #3 main journal to determine clearance.

★If the clearance exceeds the service limit, replace the thrust washers as a set and check the width of the crankshaft #3 main journal.

Crankshaft Side Clearance
Standard: 0.05 ~ 0.25 mm (0.0020 ~ 0.0098 in.)
Service Limit: 0.45 mm (0.0177 in.)

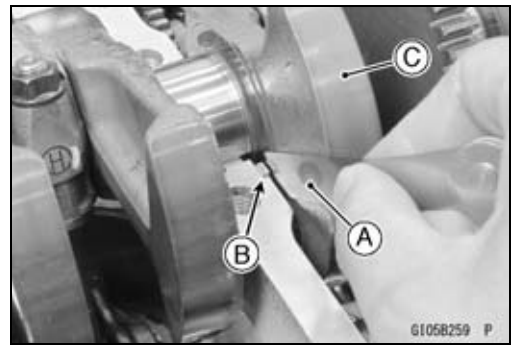

● Measure the width [A] of the crankshaft #3 main journal [B].

★If the measurement exceeds the standard, replace the crankshaft.

Crankshaft #3 Main Journal Width
Standard: 23.49 ~ 23.54 mm (0.925 ~ 0.927 in.)

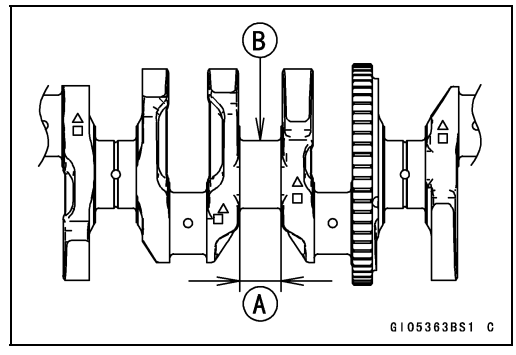

Crankshaft Runout Inspection

● Measure the crankshaft runout.

★If the measurement exceeds the service limit, replace the crankshaft.

Crankshaft Runout
Standard: TIR 0.03 mm (0.001 in.) or less
Service Limit: TIR 0.08 mm (0.003 in.)

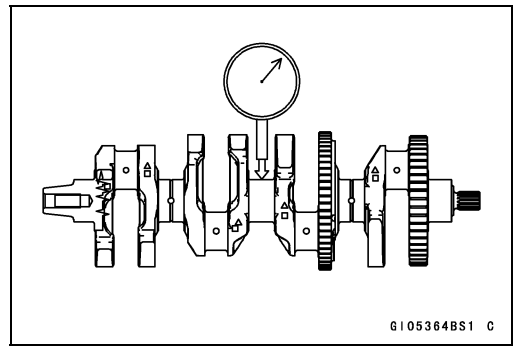

Crankshaft and Connecting Rods

Crankshaft Main Bearing Insert/Journal Wear Inspection

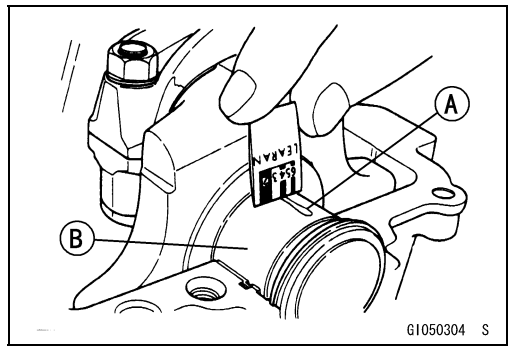

- Split the crankcase (see Crankcase Splitting).
- Cut strips of plastigage (press gauge) to journal width.
- Place a strip on each journal parallel to the crankshaft installed in the correct position.
- Tighten the crankcase bolts to the specified torque (see Crankcase Assembly).

NOTE

○*Do not turn the crankshaft during clearance measurement.*

○*Journal clearance less than 0.025 mm (0.00098 in.) can not be measured by plastigage [A], however, using genuine parts maintains the minimum standard clearance.*

- Split the crankcase again, measure each clearance between the bearing insert and journal [B] using plastigage (press gauge).

Crankshaft Main Bearing Insert/Journal Clearance
Standard: 0.010 ~ 0.034 mm (0.0004 ~ 0.0013 in.)
Service Limit: 0.06 mm (0.0024 in.)

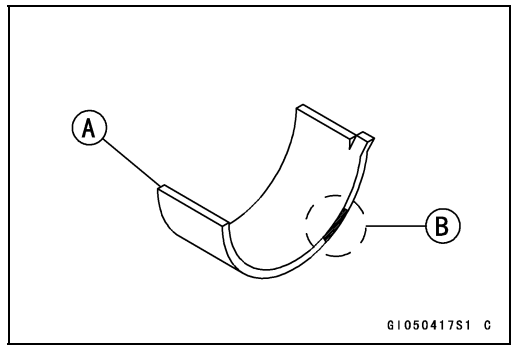

★If the clearance is within the standard, no bearing replacement is required.

★If the clearance is between 0.035 mm (0.0014 in.) and the service limit (0.06 mm, 0.0024 in.), replace the bearing inserts [A] with inserts painted blue [B]. Check insert/journal clearance with the plastigage. The clearance may exceed the standard slightly, but it must not be less than the minimum in order to avoid bearing seizure.

★If the clearance exceeds the service limit, measure the diameter of the crankshaft main journal.

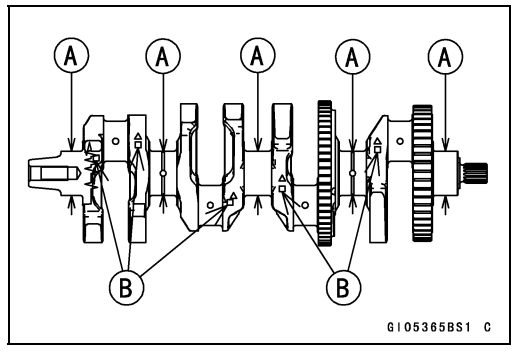

Crankshaft Main Journal Diameter [A]
Standard: 37.984 ~ 38.000 mm (1.4954 ~ 1.4961 in.)
Service Limit: 37.96 mm (1.4945 in.)

★If any journal has worn past the service limit, replace the crankshaft with a new one.

★If the measured journal diameters are not less than the service limit, but do not coincide with the original diameter markings [B] on the crankshaft, make new markings on it.

Crankshaft Main Journal Diameter Markings
None 37.984 ~ 37.992 mm (1.4954 ~ 1.49575 in.)
1 37.993 ~ 38.000 mm (1.49578 ~ 1.4961 in.)

□: Crankshaft Main Journal Diameter Markings, “1” or no mark.

Crankshaft and Connecting Rods

- Measure the main bearing inside diameter, and mark the upper crankcase half in accordance with the inside diameter.
  [A]: Crankcase Main Bearing Inside Diameter Markings, "○" or no mark.
- Tighten the crankcase bolts to the specified torque (see Crankcase Assembly).

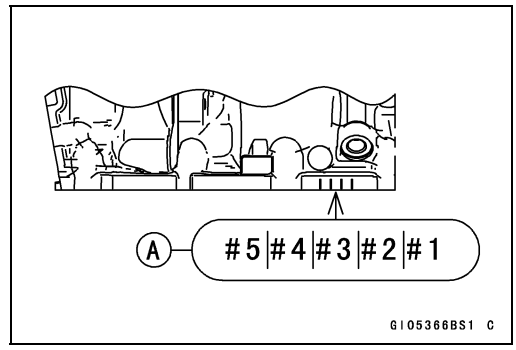

NOTE

○*The marking already on the upper crankcase half should almost coincide with the measurement.*

Crankcase Main Bearing Inside Diameter Markings

○ 41.000 ~ 41.008 mm (1.6142 ~ 1.61448 in.)

None 41.009 ~ 41.016 mm (1.61452 ~ 1.6148 in.)

- Select the proper bearing insert [A] in accordance with the combination of the crankcase and crankshaft coding.
  Size Color [B]

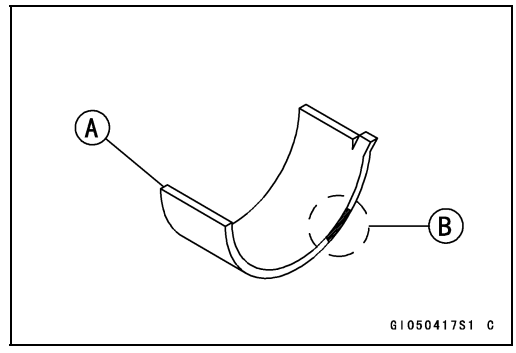

Crankcase Main Bearing Inside Diameter Marking	Crankshaft Main Journal Diameter Marking	Bearing Insert*		
		Size Color	Part Number	Journal Nos.
○	1	Brown	92139-0823	1, 3, 5
			92139-0826	2, 4
None	1	Black	92139-0822	1, 3, 5
			92139-0825	2, 4
○	None	Black	92139-0822	1, 3, 5
			92139-0825	2, 4
None	None	Blue	92139-0821	1, 3, 5
			92139-0824	2, 4

*: The bearing inserts for Nos. 2 and 4 journals have an oil groove, respectively.

- Install the new inserts in the crankcase halves and check insert/journal clearance with the plastigage.

Pistons

Piston Removal

- Remove:
  Crankshaft (see Crankshaft Removal)
- Remove the piston together with the connecting rod to the cylinder head side.

NOTICE
Discard the connecting rod bolts and nuts. To prevent damage to the crankpin surfaces, do not allow the connecting rod bolts to bump against the crankpins.

- Remove the piston pin snap ring [A] (Both Sides).

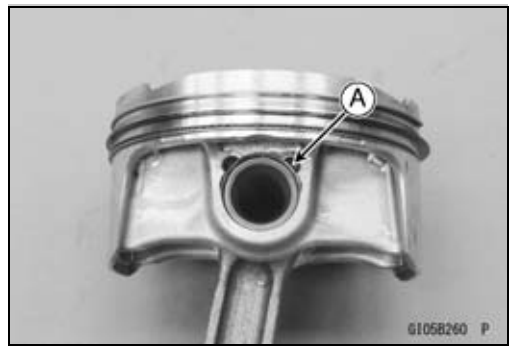

- Using the piston pin puller assembly [A], remove the piston pin.

  Special Tool - Piston Pin Puller Assembly: 57001-910

- Remove the piston from the connecting rod.

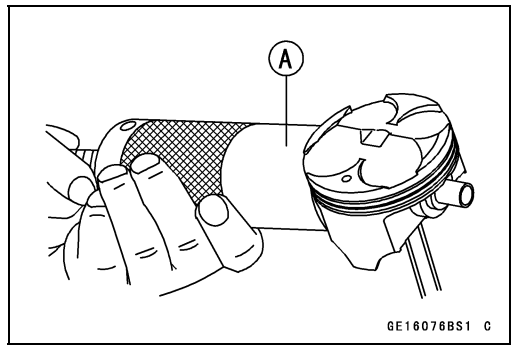

- Remove the piston rings if necessary.
- Carefully spread the ring opening with your thumbs and then push up on the opposite side of the ring [A] to remove it.
- Remove the 3-piece oil ring with your thumbs in the same manner.

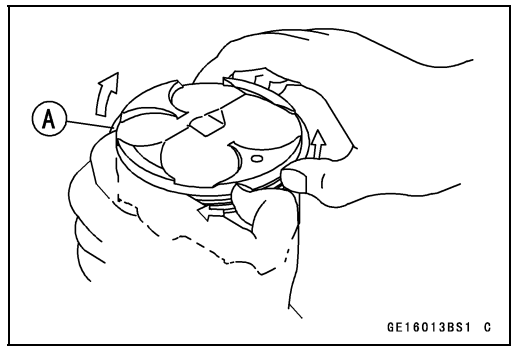

Pistons

Piston Installation

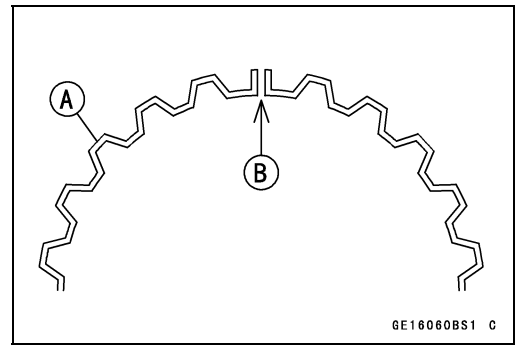

NOTE

○*If a new piston is used, use new piston ring.*

- Apply molybdenum disulfide oil solution to the oil ring expander, and install the oil ring expander [A] in the bottom piston ring groove so the ends [B] not butt together.
- Apply molybdenum disulfide oil solution to the oil ring steel rails, and install the oil ring steel rails, one above the expander and one below it.

○Spread the rail with your thumbs, but only enough to fit the rail over the piston.

○Release the rail into the bottom piston ring groove.

NOTE

○*The oil ring rails have no "top" or "bottom."*

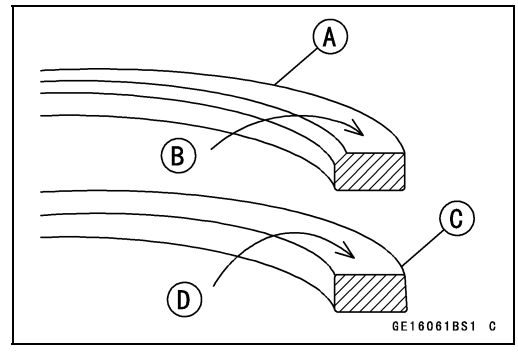

- Apply molybdenum disulfide oil solution to the piston rings.

NOTE

○*Do not mix up the top and second ring.*

- Install the top ring [A] so that the "1T" mark [B] faces up.
- Install the second ring [C] so that the "T2" mark [D] faces up.

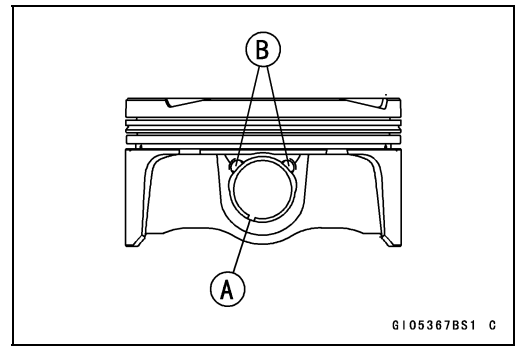

- Apply molybdenum disulfide oil solution to the piston pins and piston journals.
- Fit a new piston pin snap ring into the side of the piston so that the ring opening [A] does not coincide with the slits [B] of the piston pin hole.

○When installing the piston pin snap ring, compress it only enough to install it and no more.

NOTICE

Do not reuse snap rings, as removal weakens and deforms them. They could fall out and score the cylinder wall.

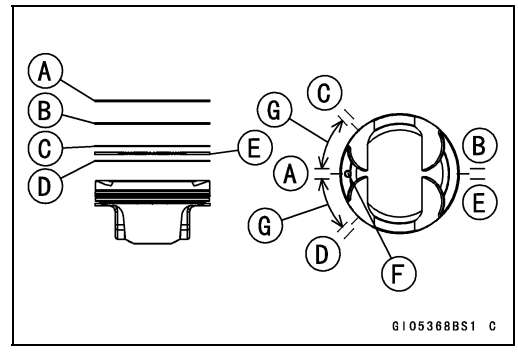

- The piston ring openings must be positioned as shown. The openings of the oil ring steel rails must be about 45° of angle from the opening of the top ring.

  Top Ring [A]
  Second Ring [B]
  Upper Oil Ring Steel Rail [C]
  Lower Oil Ring Steel Rail [D]
  Oil Ring Expander [E]
  Dent [F]
  45° [G]

Pistons

- Apply molybdenum disulfide oil solution to the cylinder bore and piston skirt.
- Install the piston with its dent mark [A] facing exhaust side.
- Using the piston ring compressor assembly [B] to install the piston from the cylinder head side.

Special Tools - Piston Ring Compressor Grip: 57001-1095
Piston Ring Compressor Belt, ϕ67 ~ ϕ79: 57001-1097

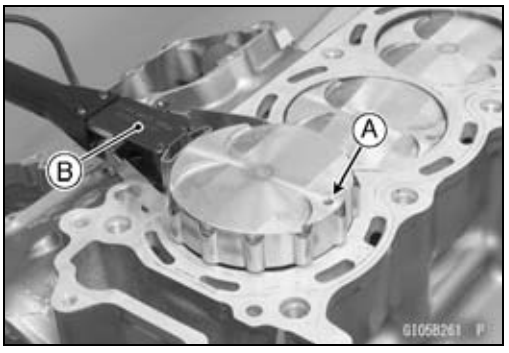

- Install:
  Crankshaft (see Crankshaft Installation)
  Connecting Rod Big End Caps (see Connecting Rod Installation)

Cylinder (Upper Crankcase) Wear Inspection

- Since there is a difference in cylinder wear (upper crankcase) in different directions, take a side-to-side and a front-to-back measurement at each of the two locations (total of four measurements) as shown.

★If any of the cylinder inside diameter measurements exceeds the service limit, replace the crankcase.
10 mm (0.39 in.) [A]
60 mm (2.36 in.) [B]

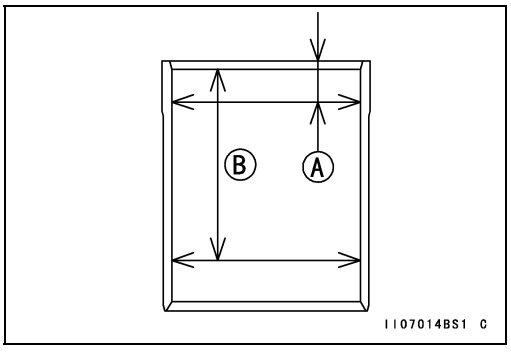

Cylinder (Upper Crankcase) Inside Diameter
Standard: 75.994 ~ 76.006 mm (2.9919 ~ 2.9924 in.)
Service Limit: 76.09 mm (2.996 in.)

Piston Wear Inspection

- Measure the outside diameter [A] of each piston 5 mm (0.20 in.) [B] up from the bottom of the piston at a right angle to the direction of the piston pin.

★If the measurement is under service limit, replace the piston.

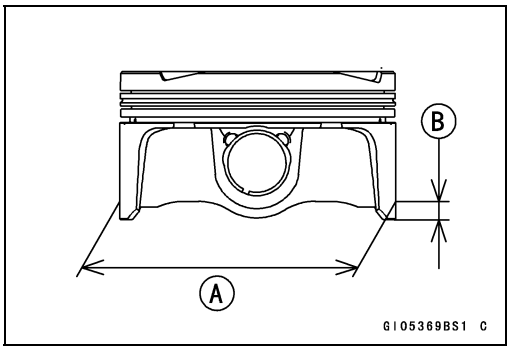

Piston Diameter
Standard: 75.939 ~ 75.954 mm (2.9897 ~ 2.9903 in.)
Service Limit: 75.79 mm (2.984 in.)

Piston Ring, Piston Ring Groove Wear Inspection

- Check for uneven groove wear by inspecting the ring seating.

★The rings should fit perfectly parallel to groove surfaces. If not, replace the piston and all the piston rings.

- With the piston rings in their grooves, make several measurements with a thickness gauge [A] to determine piston ring/groove clearance.

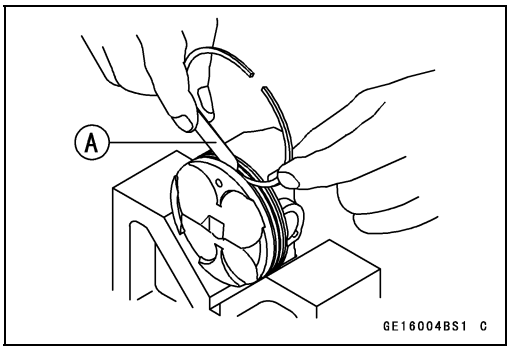

Piston Ring/Groove Clearance
Standard:
Top 0.030 ~ 0.070 mm (0.00118 ~ 0.00276 in.)
Second 0.030 ~ 0.070 mm (0.00118 ~ 0.00276 in.)
Service Limit:
Top 0.17 mm (0.0067 in.)
Second 0.17 mm (0.0067 in.)

Pistons

Piston Ring Groove Width Inspection

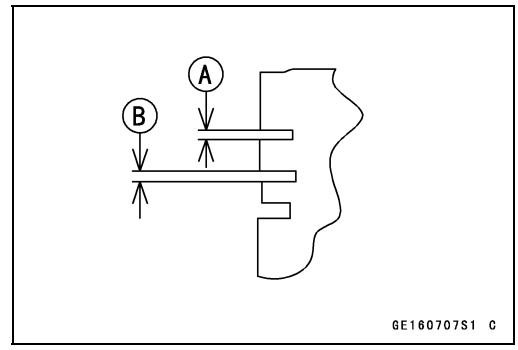

● Measure the piston ring groove width.
○Use a vernier caliper at several points around the piston.

Piston Ring Groove Width
Standard:
Top [A] 0.82 ~ 0.84 mm (0.0323 ~ 0.0331 in.)
Second [B] 0.82 ~ 0.84 mm (0.0323 ~ 0.0331 in.)
Service Limit:
Top 0.92 mm (0.0362 in.)
Second 0.92 mm (0.0362 in.)

★If the width of any of the two grooves is wider than the service limit at any point, replace the piston.

Piston Ring Thickness Inspection

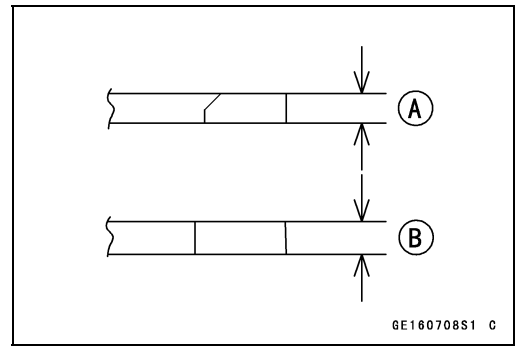

● Measure the piston ring thickness.
○Use the micrometer to measure at several points around the ring.

Piston Ring Thickness
Standard:
Top [A] 0.770 ~ 0.790 mm (0.0303 ~ 0.0311 in.)
Second [B] 0.770 ~ 0.790 mm (0.0303 ~ 0.0311 in.)
Service Limit:
Top 0.70 mm (0.028 in.)
Second 0.70 mm (0.028 in.)

★If any of the measurements is less than the service limit on either of the rings, replace all the rings.

NOTE

○*When using new rings in a used piston, check for uneven groove wear. The rings should fit perfectly parallel to the groove sides. If not, replace the piston.*

Piston Ring End Gap Inspection

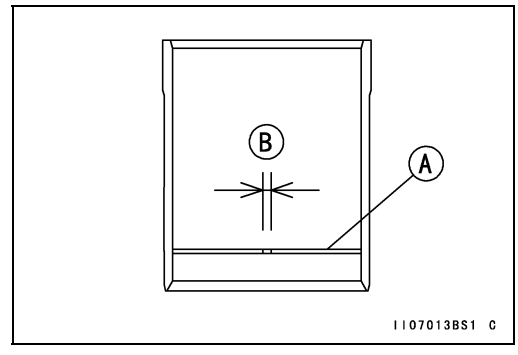

● Place the piston ring [A] inside the cylinder (upper crankcase), using the piston to locate the ring squarely in place. Set it close to the bottom of the cylinder, where cylinder wear is low.
● Measure the gap [B] between the ends of the ring with a thickness gauge.

Piston Ring End Gap
Standard:
Top 0.175 ~ 0.275 mm (0.0069 ~ 0.0108 in.)
Second 0.325 ~ 0.425 mm (0.0128 ~ 0.0167 in.)
Service Limit:
Top 0.6 mm (0.02 in.)
Second 0.7 mm (0.03 in.)

★If the end gap of either ring is greater than the service limit, replace all the rings.

Balancer

Front Balancer Removal

- Split the crankcase (see Crankcase Splitting).
- Remove the balancer shaft clamp lever bolt [A].

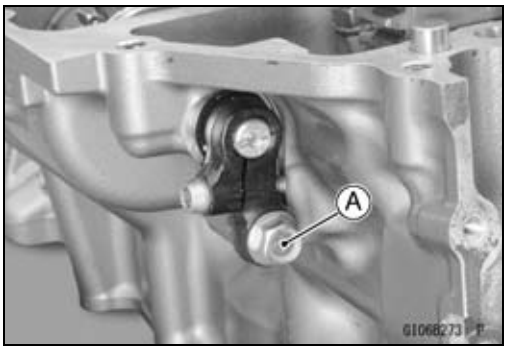

- Remove the clamp lever [A] with the oil seal [B] and balancer shaft [C] from the crankcase. The balancer weight and gear assembly [D] come off with needle bearings and washers.
- Remove the balancer shaft clamp bolt, and remove the balancer shaft clamp lever and oil seal from the balancer shaft.

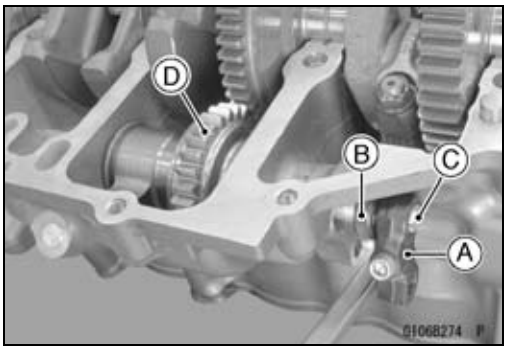

Front Balancer Installation

- Apply molybdenum disulfide oil solution to the ribs [A] of the balancer gear.
- Check that the rubber dampers [B] are in place.

○Face the linked portion [C] to the bottom.

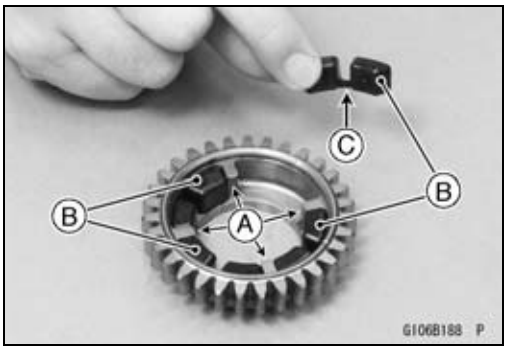

- Apply molybdenum disulfide oil solution to the ribs [A] of the balancer weight.

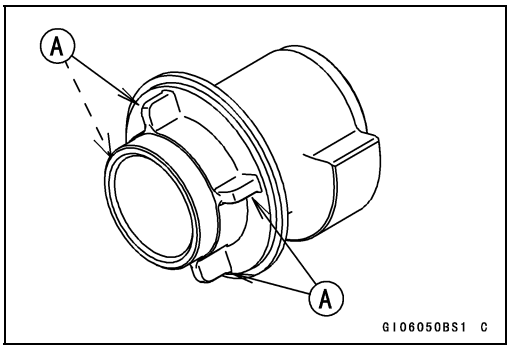

- Install the balancer weight [A] into the gear [B].

○Align the punch mark [C] of the balancer weight to the groove [D] of the gear.

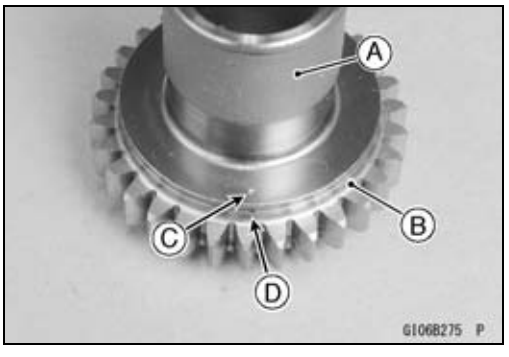

Balancer

- Apply molybdenum disulfide oil solution to the needle bearings. Install the needle bearings.
- Fit the washers [A] on both ends of the weight and gear assembly.

○The projected sides [B] face inward.

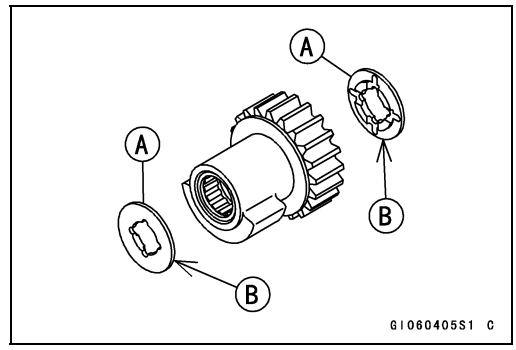

- Position the crankshaft at #2, 3 position TDC.
- Set the front balancer on the upper crankcase half.

○Align the punch mark [A] on the balancer gear with the mark [B] on the balancer drive gear of crankshaft.

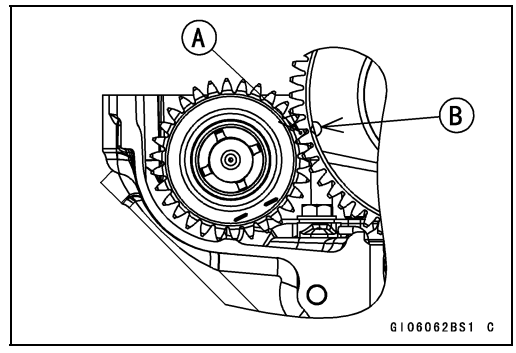

- Apply molybdenum disulfide oil solution to the balancer shaft [A].
- Install the balancer shaft to the crankcase until it is bottomed.
- Install the new oil seal [B] as shown.

○Fill the oil seal lips with grease.

- Install the balancer shaft clamp lever [C].
- Check that the lever is in contact with the crankcase.
- Apply a non-permanent locking agent to the threads of the balancer shaft clamp lever bolt [D].
- Tighten:

Torque - Balancer Shaft Clamp Lever Bolt: 33 N·m (3.4 kgf·m, 24 ft·lb)

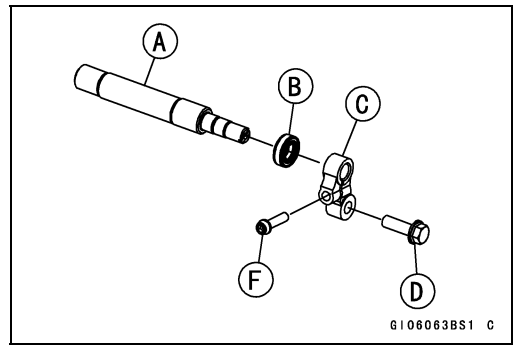

- Turn the balancer shaft so that its marks [E] is in position as shown.
- Tighten:

Torque - Balancer Shaft Clamp Bolt [F]: 10 N·m (1.0 kgf·m, 89 in·lb)

- Install the removed parts (see appropriate chapters).

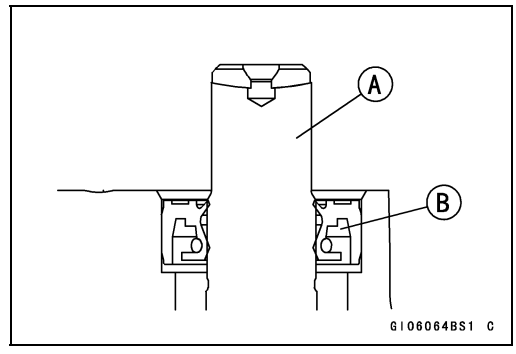

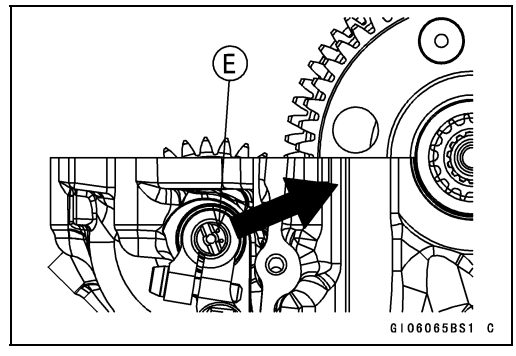

Balancer

Rear Balancer Removal

- Remove:
  Thermostat (see Thermostat Removal in the Cooling System chapter)
  Right Throttle Body Assy Holder [A] (see Throttle Body Assy Holder Removal in the Engine Top End chapter)
- Disconnect the water temperature sensor lead connector [B].
- Slide the clamp [C].
- Remove the water hose [D] with the thermostat housing cover.

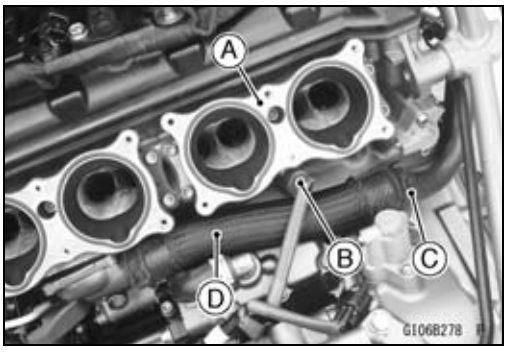

- Remove:
  Breather Cover Bolts [A]
  Breather Cover Bolt and Washer [B]
  Breather Covers [C]
  Breather Cover Gaskets

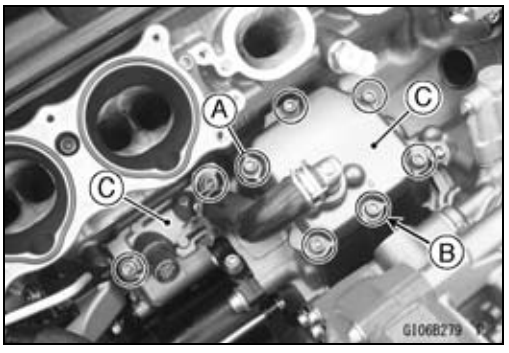

- Remove the balancer shaft clamp lever bolt [A].

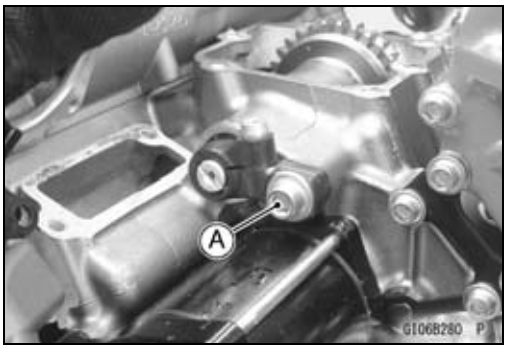

- Remove the clamp lever [A] with the oil seal [B] and balancer shaft [C] from the crankcase. The balancer weight and gear assembly [D] come off with needle bearings and washers.
- Remove the balancer shaft clamp bolt, and remove the balancer shaft clamp lever and oil seal from the balancer shaft.

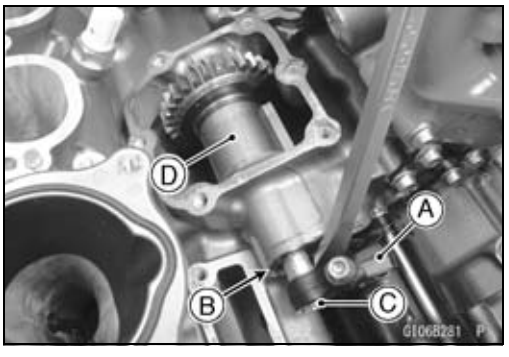

Rear Balancer Installation

- Apply molybdenum disulfide oil solution to the ribs [A] of the balancer gear.
- Check that the rubber dampers [B] are in place.

○Face the linked portion [C] to the bottom.

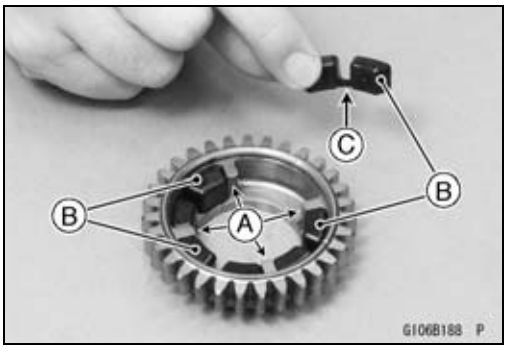

Balancer

- Apply molybdenum disulfide oil solution to the ribs [A] of the balancer weight.

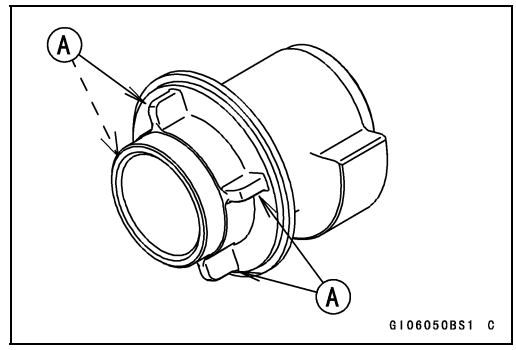

- Install the balancer weight [A] into the gear [B].

○Align the punch mark [C] of the balancer weight to the groove [D] of the gear.

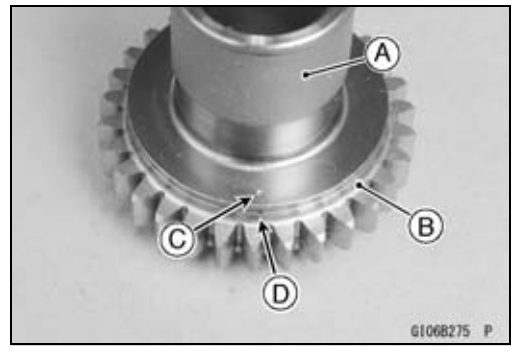

- Apply molybdenum disulfide oil solution to the needle bearings. Insert the needle bearings.
- Fit the washers [A] on both ends of the weight and gear assembly.

○The projected sides [B] face inward.

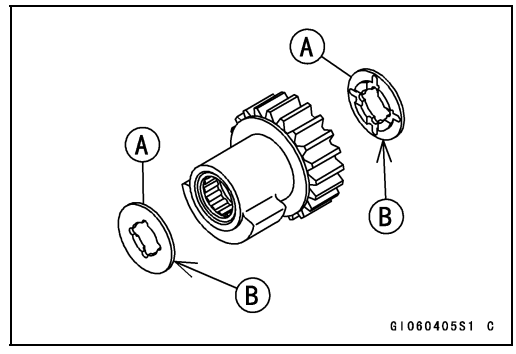

- Position the crankshaft at # 2, 3 position TDC or at # 1, 4 position TDC.
- Align the line mark [A] on the balancer gear with the mating surface [B] of the breather cover.

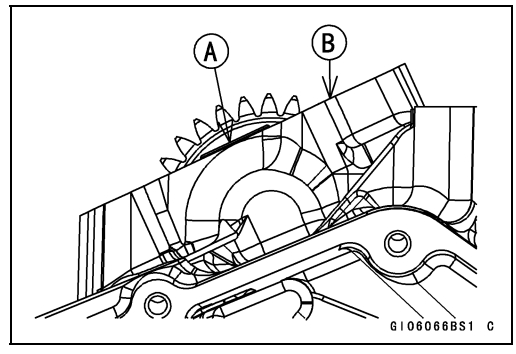

- Install the balancer shaft [A].
- Install the new oil seal [B] as shown.

○Fill the oil seal lips with grease.

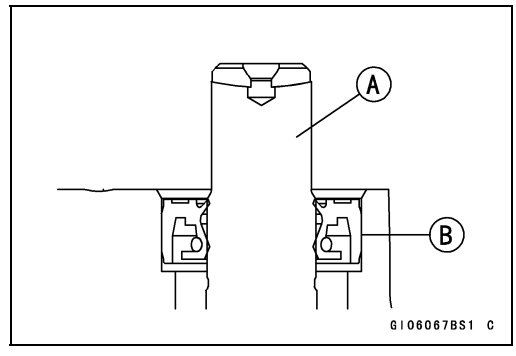

Balancer

- Install the balancer shaft clamp lever [A].
- Check that the lever is in contact with the crankcase.
- Apply a non-permanent locking agent to the threads of the balancer shaft clamp lever bolt [B].
- Tighten:

Torque - Balancer Shaft Clamp Lever Bolt: 33 N·m (3.4 kgf·m, 24 ft·lb)

- Turn the balancer shaft so that its mark [C] is in position as shown.
- Tighten:

Torque - Balancer Shaft Clamp Bolt [D]: 10 N·m (1.0 kgf·m, 89 in·lb)

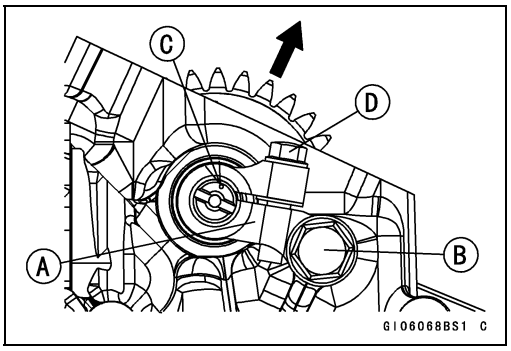

- When installing the breather plate [A], note the following.
- Install the breather plate.
- Apply a non-permanent locking agent to the threads of the breather plate bolts [B].
- Tighten:

Torque - Breather Plate Bolts: 10 N·m (1.0 kgf·m, 89 in·lb)

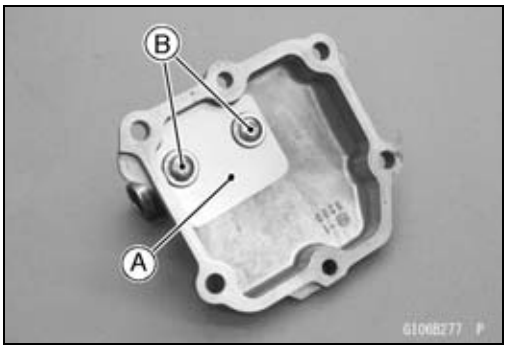

- When installing the separator [A], note the following.
- Visually inspect the separator.

★If the separator is damaged, replace it.

- Install the separator and new snap ring [B].

Special Tool - Inside Circlip Pliers: 57001-143

- Run the hoses correctly (see Cable, Wire, and Hose Routing section in the Appendix chapter).

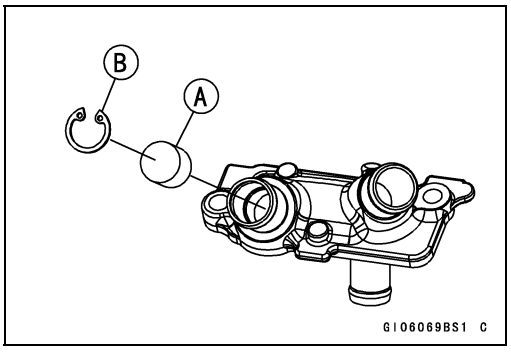

- Replace the breather cover gaskets with new ones.
- Insert the breather hose [A] to the hole [B] of the crankcase.

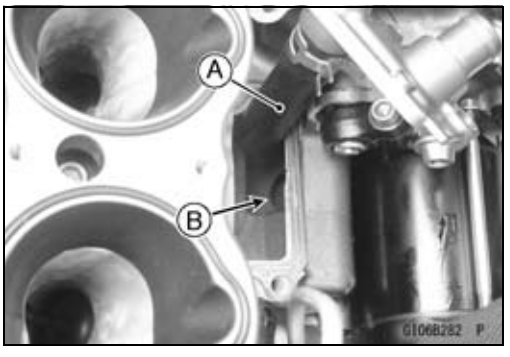

Balancer

- Replace the washer [A] with a new one.
- Tighten:

Torque - Breather Cover Bolts [B]: 10 N·m (1.0 kgf·m, 89 in·lb)

- Install the removed parts (see appropriate chapters).

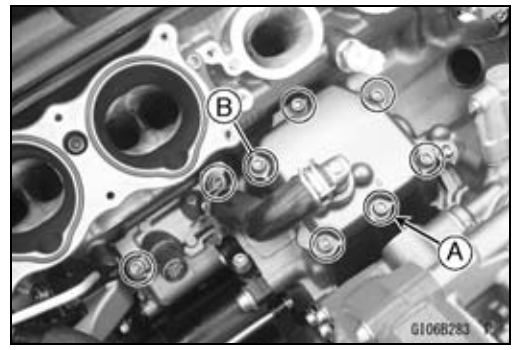

Balancer Adjustment

NOTE

○*First, adjust the front balancer, next the rear balancer.*

- Remove the lower fairings (see Lower Fairing Removal in the Frame chapter).
- Start the engine and warm it up thoroughly.
- Adjust the front balancer gear backlash with the engine idling.
- The amount of backlash can be changed by turning the front balancer shaft which has eccentric journals.

○Start the engine and let it idle.

- Loosen the clamp bolt [A] and turn the front balancer shaft [B] clockwise [C] until the front balancer gear makes a whining sound.

○Hold the front balancer shaft to until tightening clamp bolt.

- Turn the shaft counterclockwise [D] until the front balancer gear whining sound disappears and tighten the clamp bolt.

Torque - Balancer Shaft Clamp Bolt: 10 N·m (1.0 kgf·m, 89 in·lb)

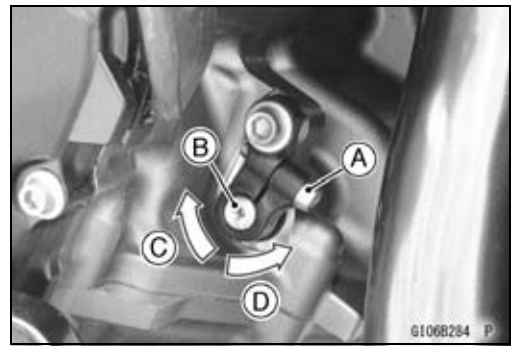

- Confirm the whining sound from the rear balancer.

★If there is the whining sound from the rear balancer, adjust the rear balancer.

- Remove:
  Throttle Body Assy (see Throttle Body Assy Removal in the Fuel System (DFI) chapter)
  Rear Intake Duct (see Intake Duct Removal in the Frame chapter)
- The amount of backlash can be changed by turning the rear balancer shaft which has eccentric journals.
- Mark the balancer shaft and lever to confirm the original position.
  Mark [A]
- Loosen the clamp bolt [B] and turn the rear balancer shaft [C] clockwise [D] or counterclockwise [E] a little.
- Tighten:

Torque - Balancer Shaft Clamp Bolt: 10 N·m (1.0 kgf·m, 89 in·lb)

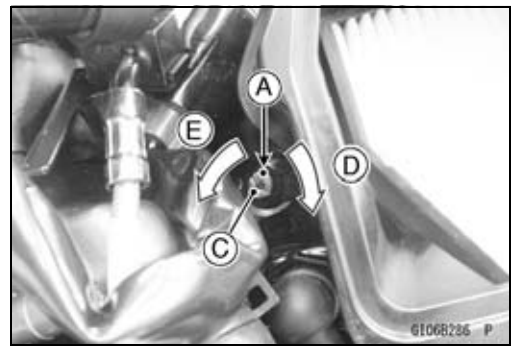

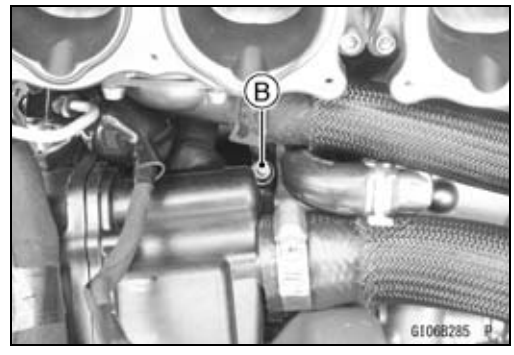

Balancer

- Install the removed parts (see appropriate chapters).
- Start the engine and warm it up thoroughly.
- Confirm the whining sound from the rear balancer.

★If there is the whining sound from the rear balancer, adjust the rear balancer again in the same procedure.

★If the whining sound becomes large, turn the rear balancer shaft in the inverted direction.

★If the whining sound becomes small, turn the rear balancer shaft in the same direction.

- Repeat the above procedures until the whining sound disappears.

Balancer Damper Inspection

- Remove the balancer and disassemble the weight and gear assembly.
- Visually inspect the rubber dampers [A].

★If they appear damaged or deteriorated, replace them.

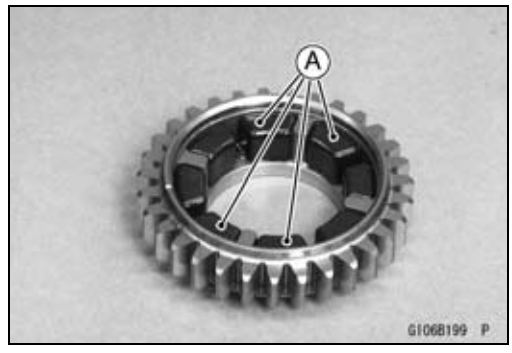

Starter Motor Clutch and Torque Limiter

Starter Motor Clutch Removal

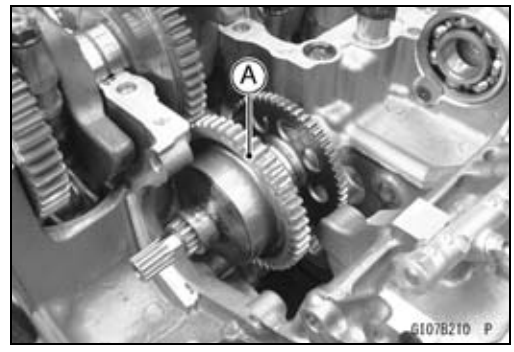

- Split the crankcase (see Crankcase Splitting).
- Remove:
  Torque Limiter (see Torque Limiter Removal)
  Starter Motor Clutch Assy [A]

Starter Motor Clutch Installation

- Installation is the reverse of removal.

Starter Motor Clutch Disassembly

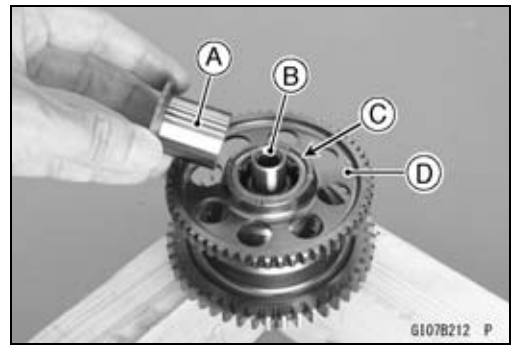

- Remove:
  Starter Motor Clutch Assy (see Starter Motor Clutch Removal)
  Collar [A]
  Starter Motor Clutch Shaft [B]
  Needle Bearing [C]
  Driven Gear [D]

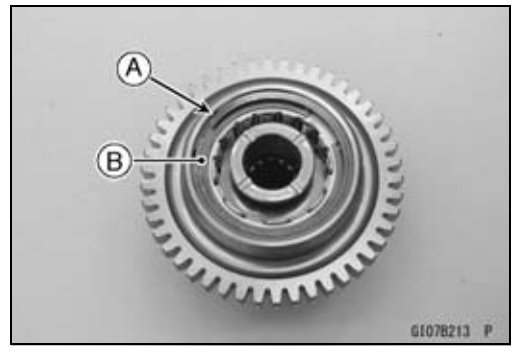

- Remove the snap ring [A].
- Holding the drive gear with a hand, remove the one-way clutch [B] from the gear using the flat tip screwdriver.

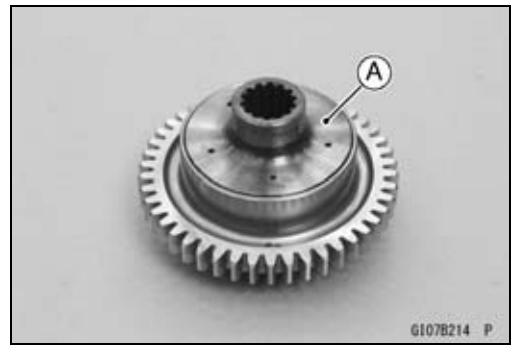

- Remove:
  Coupling [A]
  Rubber Dampers

Starter Motor Clutch and Torque Limiter

Starter Motor Clutch Assembly

- Install the rubber dampers [A] as shown.
  Coupling Side [B]
  Drive Gear Side [C]
- Apply molybdenum disulfide oil solution to the dampers.

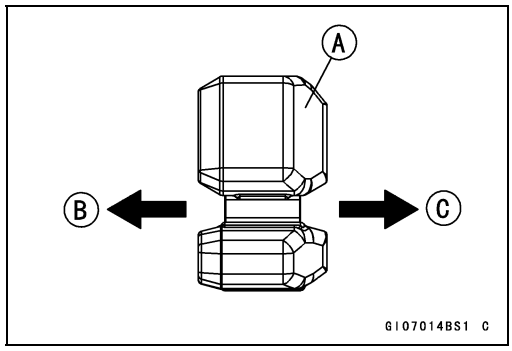

- Insert the pins [A] into the hole [B].

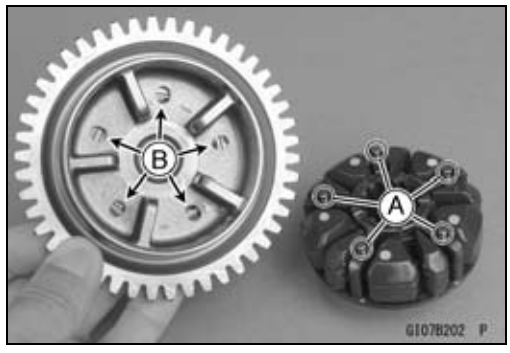

- Be sure to install the one-way clutch [A] so that its blue paint [B] faces to the snap ring [C].
- Install the new snap ring to the one-way clutch.

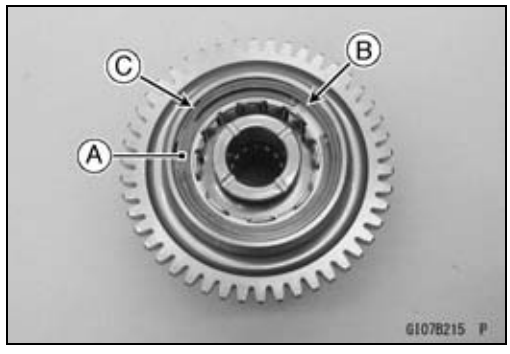

- Install in the driven gear [A] to the drive gear [B] while turning the driven gear counterclockwise [C].

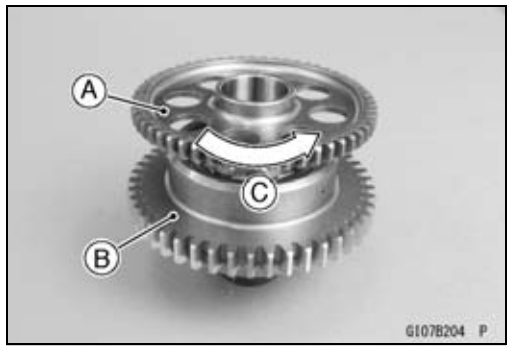

- Apply molybdenum disulfide oil solution to the needle bearing [A].
- Install:
  Starter Motor Clutch Shaft [B]
  Needle Bearing
  Collar [C]

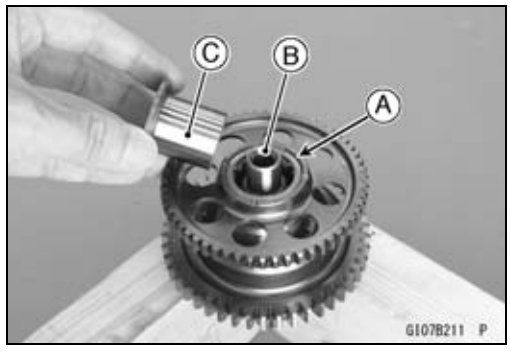

Starter Motor Clutch and Torque Limiter

Starter Motor Clutch Damper Inspection

- Remove the starter motor clutch and disassemble the coupling and gear assembly.
- Visually inspect the rubber dampers [A].

★If they appear damaged or deteriorated, replace them.

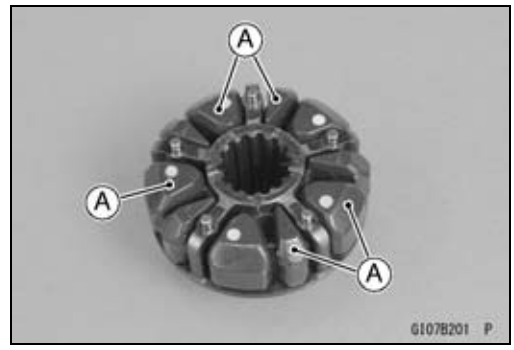

Starter Clutch Inspection

- Remove:
  Rear Balancer (see Rear Balancer Removal)
  Starter Motor (see Starter Motor Removal in the Electrical System chapter)
- Turn the starter idle gear [A] by hand. The starter idle gear should turn forward [B] freely, but should not turn backward [C].

★If the clutch does not operate as it should or if it makes noise, disassemble the starter clutch, examine each part visually, and replace any worn or damaged parts.

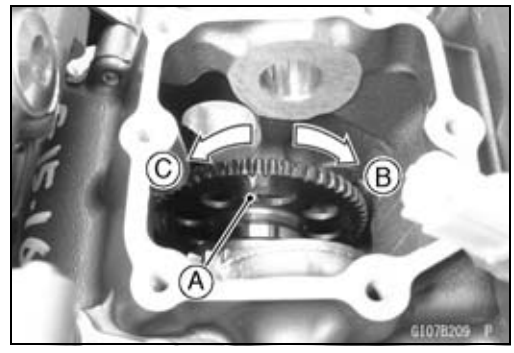

Torque Limiter Removal

- Split the crankcase (see Crankcase Splitting).
- Remove:
  Torque Limiter Shaft [A]
  Torque Limiter [B]

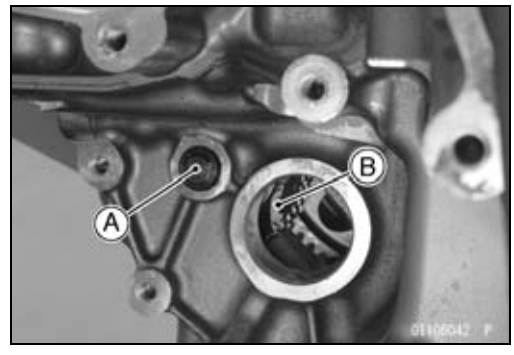

Torque Limiter Installation

- Replace the O-ring [A] with a new one.
- Apply a grease to the O-ring and install it.
- Apply molybdenum disulfide grease to the torque limiter shaft [B].
- Install the torque limiter and shaft.

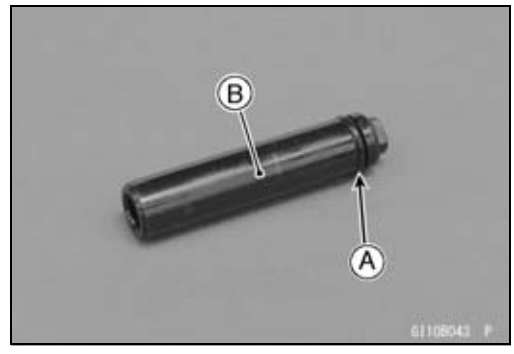

Transmission

Transmission Assy Removal

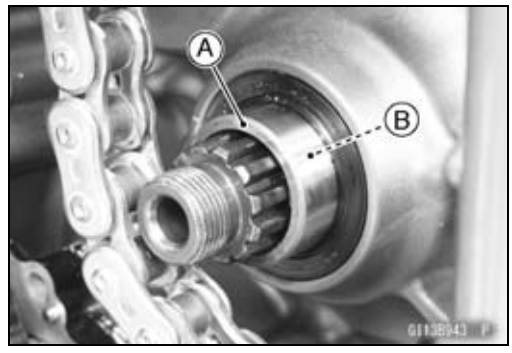

● Remove:
Engine Sprocket (see Engine Sprocket Removal in the Final Drive chapter)
Gear Position Sensor (see Gear Position Sensor Removal in the Electrical Sensor chapter)
Collar [A]
O-ring [B]

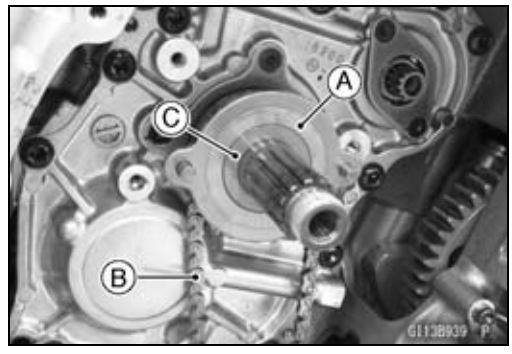

● Remove:
Clutch (see Clutch Removal in the Clutch chapter)
Shift Shaft Assembly (see External Shift Mechanism Removal)
Supercharger Chain (see Supercharger Housing Assy Removal in the Fuel System (DFI) chapter)
Oil Pump Driven Gear (see Oil Pump Driven Gear Removal in the Engine Lubrication System chapter)
Oil Pump Drive Gear [A]
Oil Pump Chain [B]
Collar [C]

★If the transmission assy is to be disassembled, remove the following.
Gear Positioning Lever (see External Shift Mechanism Removal)

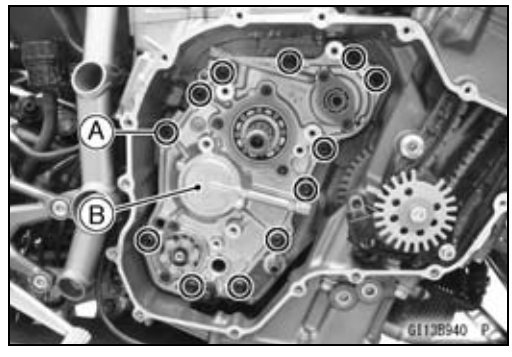

● Remove:
Transmission Case Bolts [A]
Transmission Assy [B]
Dowel Pin
Washer (Starter Motor Clutch Shaft)

Transmission

Transmission Assy Disassembly

- Remove the transmission assy (see Transmission Assy Removal).
- Remove the following parts from the transmission case [A].
  Shift Rod [B]
  Shift Forks [C]
  Drive Shaft Assy [D]
  Output Shaft Assy [E]

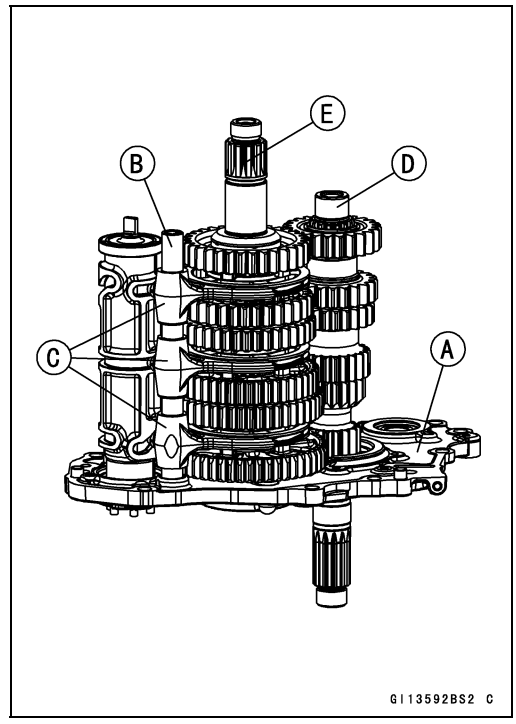

NOTE

○*Remove each drive shaft and the output shaft as an assembly.*

○When removing the output shaft assy [A], the following parts come off together.
Shim [B]
Needle Bearing [C]
1st Gear [D]
Washer [E]
Shifter [F]

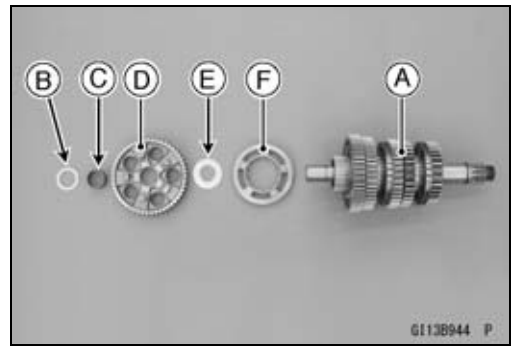

- Remove:
  Shift Drum Cam Holder Bolt [A]
  Washer
  Shift Drum Cam [B]
  Shift Drum [C]

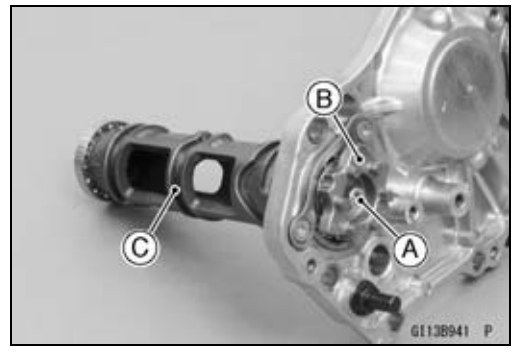

Transmission

Transmission Assy Assembly

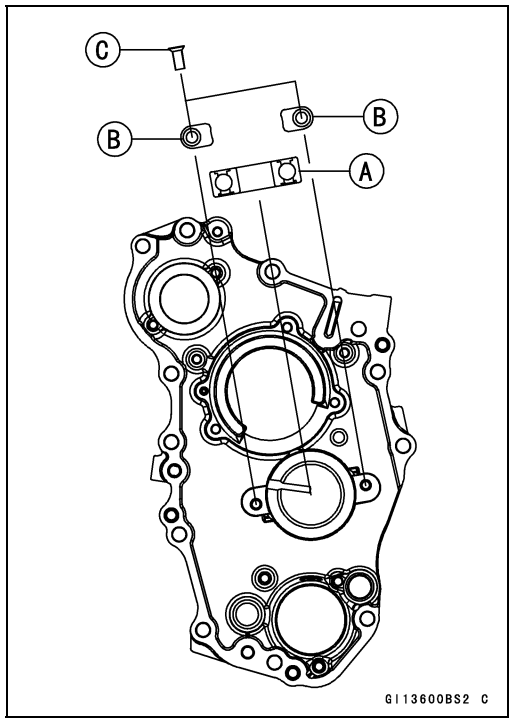

- Press the new ball bearing [A] until it is bottomed.

○Face the oil seal side of the bearing to the bottom.

Special Tool - Bearing Driver Set: 57001-1129

- Install the bearing holders [B] so that the taper side faces outside.
- Apply a non-permanent locking agent to the threads of the bearing holder screws [C].
- Tighten:

Torque - Bearing Holder Screws: 10 N·m (1.0 kgf·m, 89 in·lb)

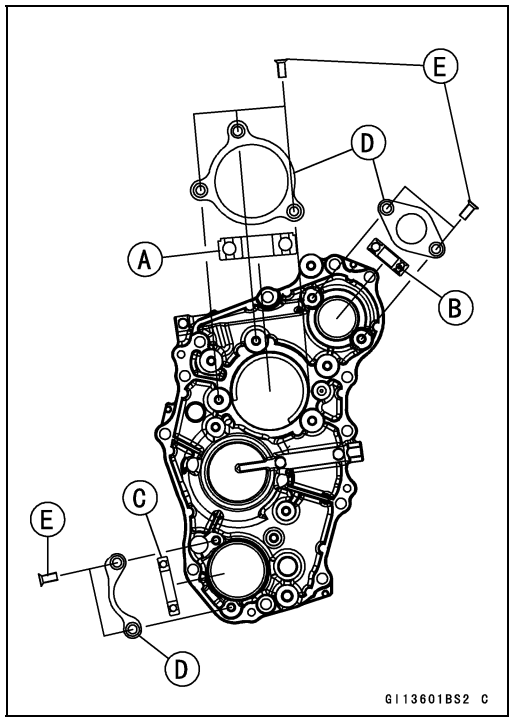

- Press the new ball bearings until they are bottomed.

○Face the stepped side of the bearing [A] to the bearing holder side.

○Face the oil seal side of the bearing [B] to the bottom.

○Face the marked side of the bearing [C] to the bearing holder side.

Special Tool - Bearing Driver Set: 57001-1129

- Install the bearing holders [D] so that the tapered side faces outside.
- Apply a non-permanent locking agent to the threads of the bearing holder screws [E].
- Tighten:

Torque - Bearing Holder Screws: 10 N·m (1.0 kgf·m, 89 in·lb)

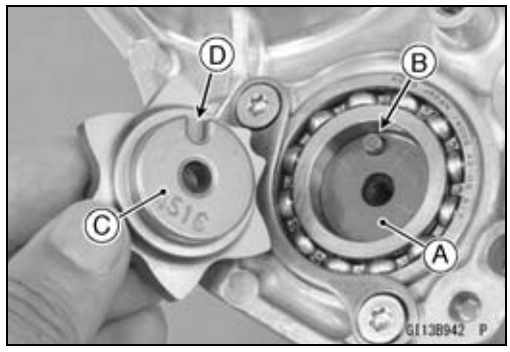

- Install:
  Shift Drum Assembly [A]
  Pin [B]
  Shift Drum Cam [C]

○Align the pin with the recess [D].

- Apply a non-permanent locking agent to the threads of the sift drum cam holder bolt, and tighten it with washer.

Torque - Shift Drum Cam Holder Bolt: 12 N·m (1.2 kgf·m, 106 in·lb)

Transmission

- Install the drive shaft assy [A] and output shaft assy [B] as a set in the transmission case [C].

○Install the following parts on the output shaft.
Shifter [D]
Washer [E]
1st Gear [F]
Needle Bearing [G]
Shim [H]

- Install the shift forks as shown.
Mark [I]
Long [J]
Short [K]
- Install the shift rod [L].
- Apply molybdenum disulfide oil solution to the transmission gears.

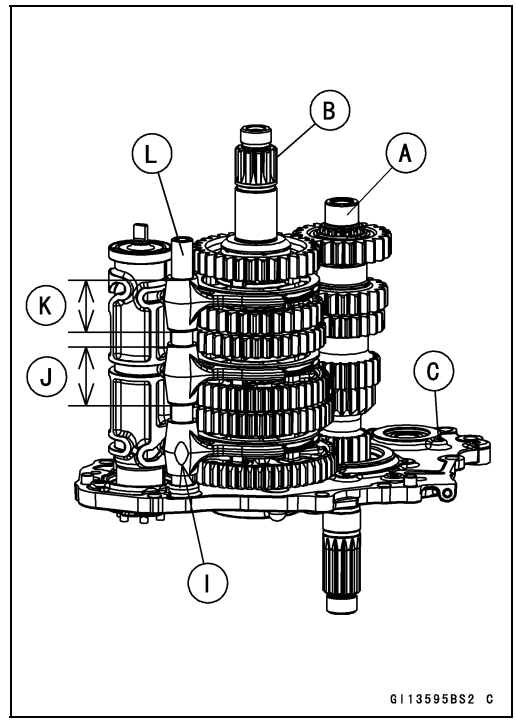

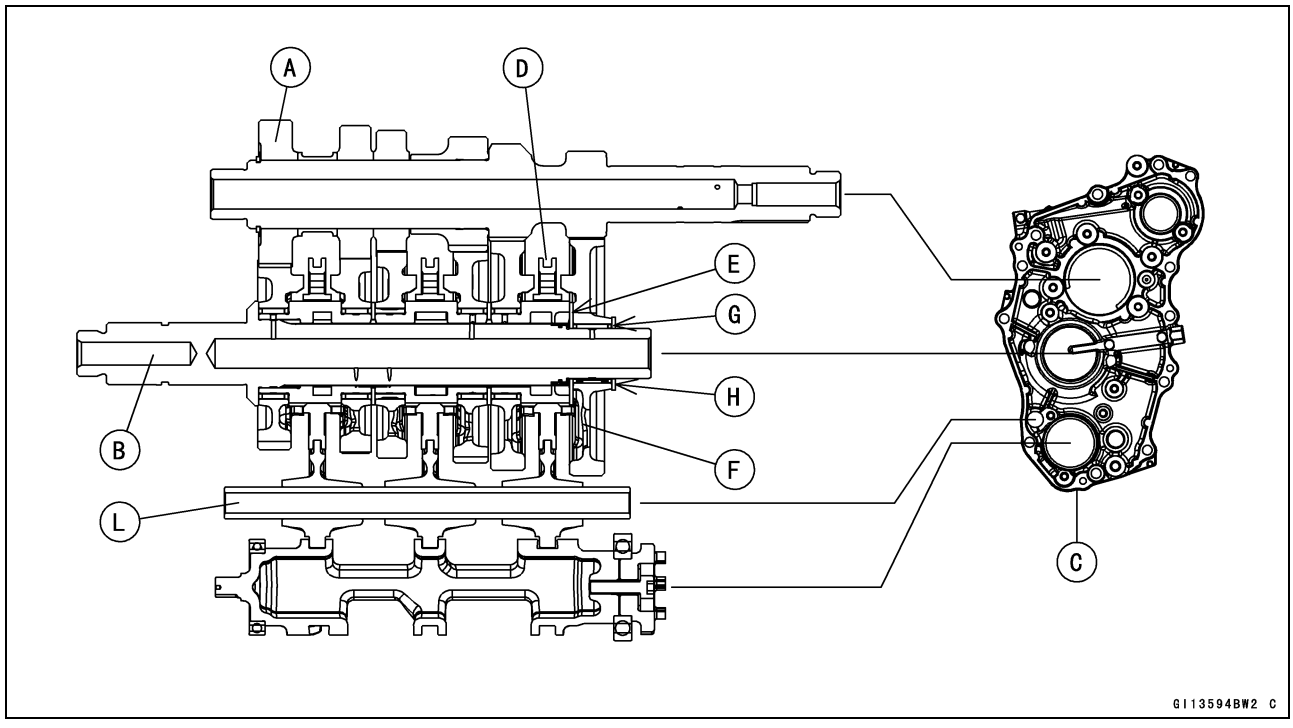

Transmission Assy Installation

- Be sure that the dowel pins and washer [A] are in position.
- Install the transmission assy on the crankcase.
- Tighten:

Torque - Transmission Case Bolts: 20 N·m (2.0 kgf·m, 15 ft·lb)

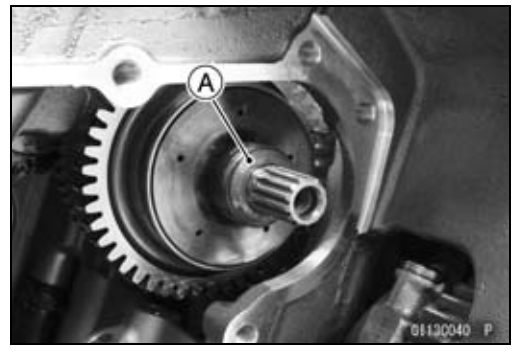

Transmission

- Install the gear positioning lever (see External Shift Mechanism Installation).
- Set the gear positioning lever to the neutral position.
- Check that the drive and output shaft turn freely.

- Apply grease to the new O-ring [A] and install it to its position on the output shaft [B].
- Install the collar [C].
- When installing the oil seal [D], install it as follows.

○Apply grease to the oil seal lips.
○Apply soap and water solution to the outer circumference of the oil seal so that it will go into place smoothly.
○Press the oil seal to the crankcase so that the surface of the oil seal is flush with the surface of the crankcase as shown.

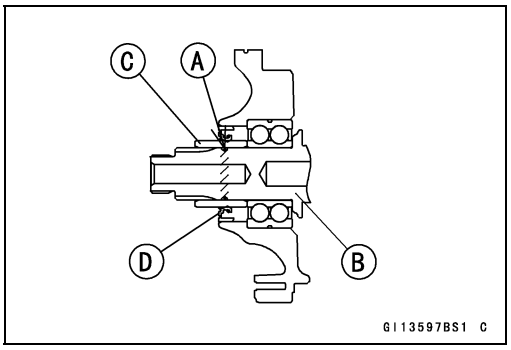

- Apply molybdenum disulfide oil solution to the collar [A].
- Install:
  Collar
  Oil Pump Chain [B]
  Oil Pump Drive Gear [C]
- Install the removed parts (see appropriate chapters).

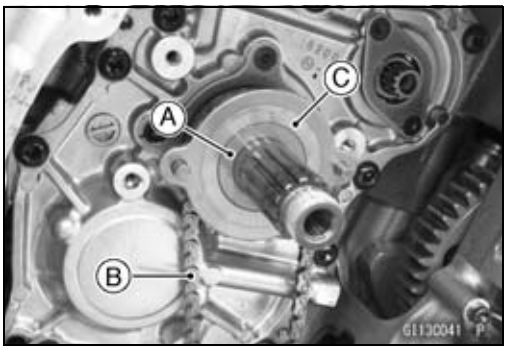

Transmission Shaft Removal

- Refer to the Transmission Assy Disassembly.

Transmission Shaft Installation

- Refer to the Transmission Assy Assembly.

Transmission Shaft Disassembly

NOTICE
Do not disassemble or adjust the transmission shafts [A], because they are adjusted or set at the manufacturer. Adjustment of these parts could result in poor performance, requiring replacement of the transmission shafts.

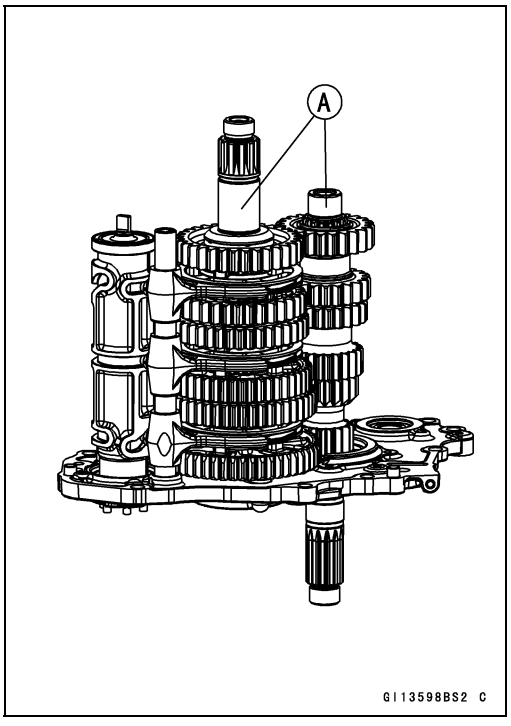

Shift Drum and Fork Removal

- Refer to the Transmission Assy Disassembly.

Transmission

Shift Drum and Fork Installation

● Refer to the Transmission Assy Assembly.

Shift Drum Disassembly/Assembly

● Remove:
Shift Drum [A] (see Transmission Assy Disassembly)
Ball Bearing [B]
● Press the ball bearing on the shift drum until it is bottomed.
● Install the removed parts (see appropriate chapters).

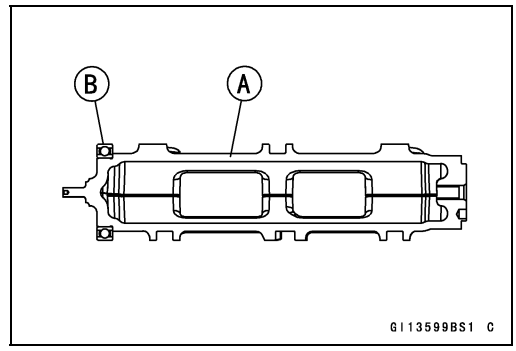

Shift Fork Bending Inspection

● Visually inspect the shift forks, and replace any fork that is bent. A bent fork could cause difficulty in shifting, or allow the transmission to jump out of gear when under power.
90° [A]

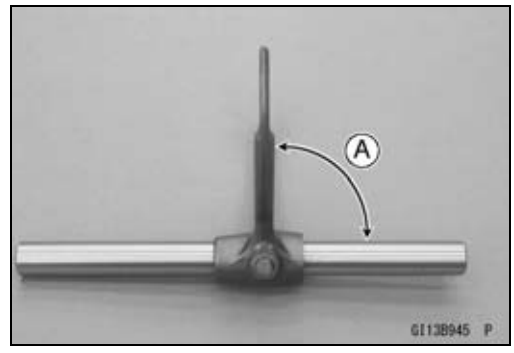

Shift Fork/Shifter Groove Wear Inspection

● Measure the thickness of the shift fork ears [A], and measure the width [B] of the shifters of the output shaft.
★If the thickness of a shift fork ear is less than the service limit, the shift fork must be replaced.

Shift Fork Ear Thickness
Standard: 3.4 ~ 3.5 mm (0.13 ~ 0.14 in.)
Service Limit: 3.3 mm (0.13 in.)

★If the sifter groove is worn over the service limit, the output shaft must be replaced.

Shifter Groove Width
Standard: 3.55 ~ 3.65 mm (0.140 ~ 0.144 in.)
Service Limit: 3.8 mm (0.15 in.)

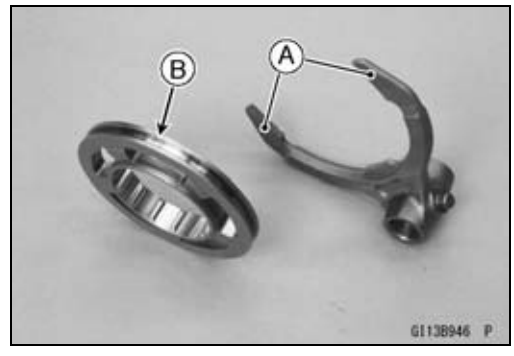

Shift Fork Guide Pin/Drum Groove Wear Inspection

● Measure the diameter of each shift fork guide pin [A], and measure the width of each shift drum groove [B].
★If the guide pin on any shift fork is less than the service limit, the fork must be replaced.

Shift Fork Guide Pin Diameter
Standard: 6.9 ~ 7.0 mm (0.27 ~ 0.28 in.)
Service Limit: 6.8 mm (0.27 in.)

★If any shift drum groove is worn over the service limit, the drum must be replaced.

Shift Drum Groove Width
Standard: 7.05 ~ 7.20 mm (0.278 ~ 0.283 in.)
Service Limit: 7.3 mm (0.29 in.)

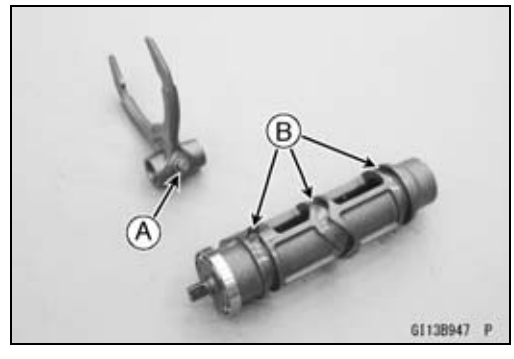

External Shift Mechanism

Shift Pedal Removal

- Remove the engine sprocket cover (see Engine Sprocket Removal in the Final Drive chapter).
- Remove the quick shifter sensor connector [A] from the bracket.
- Disconnect the quick shifter sensor connector.



- Open the clamps [A].

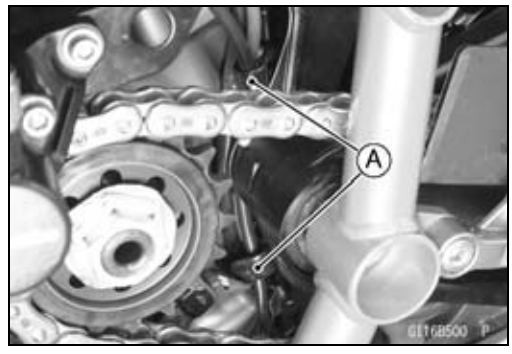

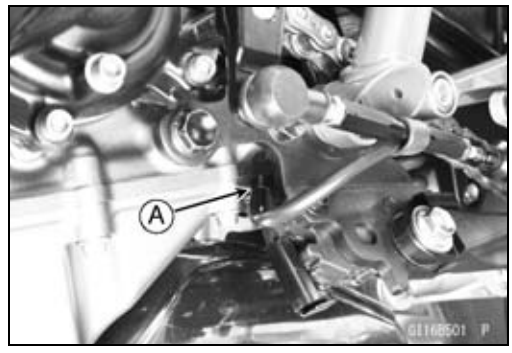

★If the tie-rod [A] and quick shifter sensor [B] is removed from the shift pedal [C] and shift lever [D], note the following.

○The following portions have left-hand threads.
Shift Lever Side of Tie-Rod Locknut [E]
Ball Joint [F] of Shift Lever

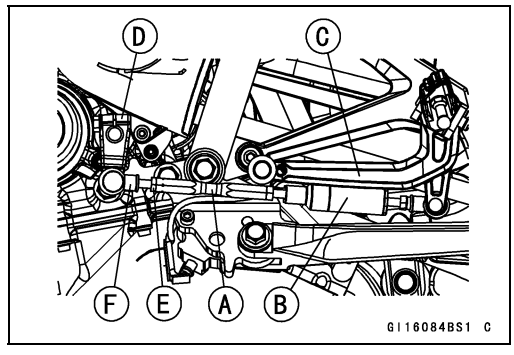

- Remove:
Shift Lever Clamp Bolt [A]
Shift Lever [B]
Footpeg Bracket Bolts [C]
Footpeg Bracket with Shift Pedal [D]

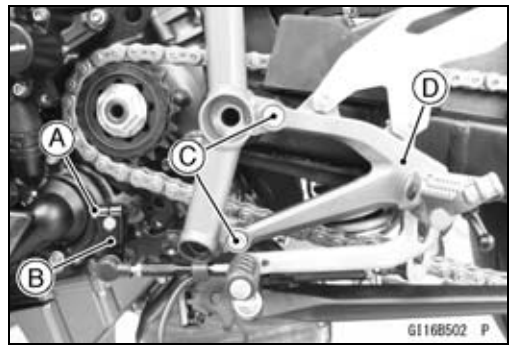

External Shift Mechanism

- Remove:
  Shift Pedal Mounting Bolt [A]
  Footpeg [B]
  Shift Pedal [C]
  Washers [D]

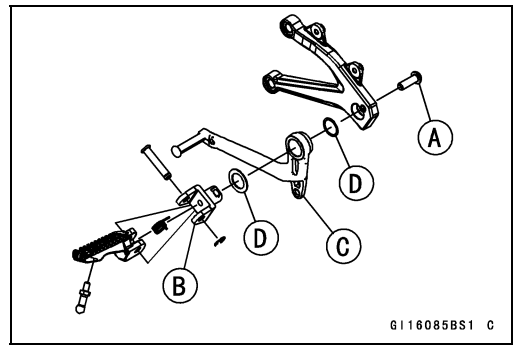

Shift Pedal Installation

★When installing the tie-rod [A] and quick shifter sensor [B] to the shift pedal [C] and shift lever clamp [D], note the following.

○The following portions have left-hand threads.
  Shift Lever Side of Tie-Rod Locknut [E]
  Ball Joint [F] of Shift Lever

○The quick shifter sensor lead [G] faces to the inside.

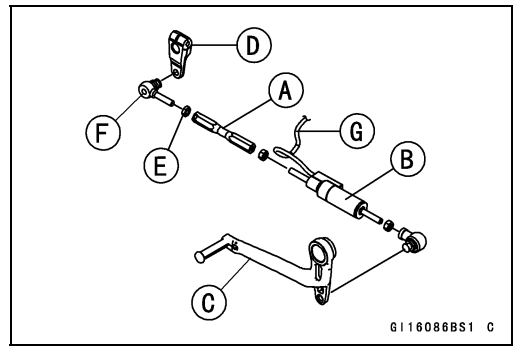

- Measure the length.
  Quick Shifter Sensor Locknut [A]
  Quick Shifter Sensor [B]
  About 11 mm (0.43 in.) [C]
- Tighten the quick shifter sensor locknut.

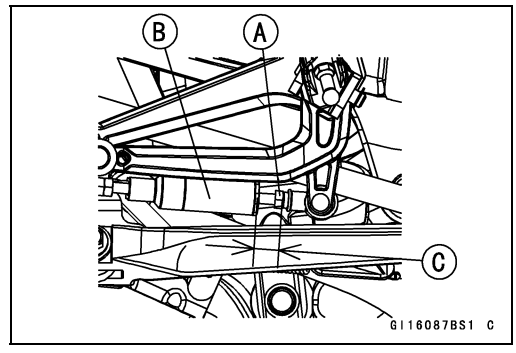

- Apply a non-permanent locking agent to the threads of the shift pedal mounting bolt [A].
- Apply grease to the sliding surface [B] of the footpeg.
- Install:
  Washers [C]
  Shift Pedal [D]
  Footpeg
- Tighten the shift pedal mounting bolt.

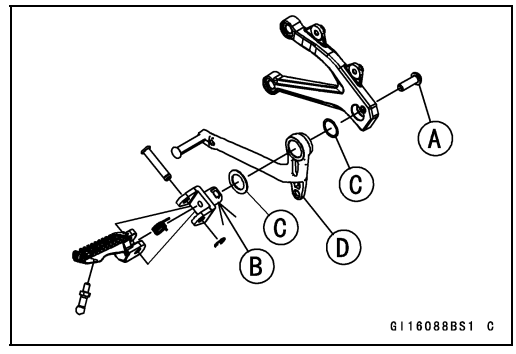

- Align the punch mark [A] on the shift shaft with the slit [B] of the shift lever clamp.
- Tighten:

Torque - Shift Lever Clamp Bolt [C]: 9.8 N·m (1.0 kgf·m, 87 in·lb)

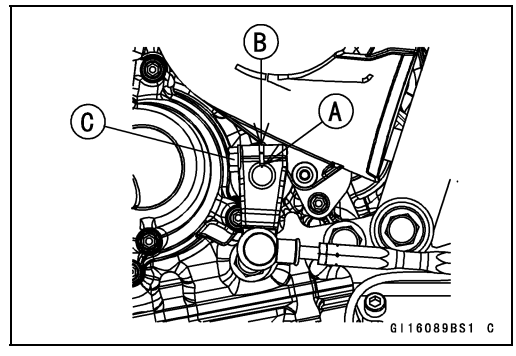

External Shift Mechanism

- After installation, confirm that the shift pedal [A] is positioned as shown.
  About 11 mm (0.43 in.) [B]
  About 90° [C]

★If the pedal position is different, adjust it as follows.

○To adjust the pedal position, loosen the front locknut [D] (left-hand threads) and rear locknut [E], and then turn the tie-rod [F].

- Tighten the shift lever locknuts.
- Run the lead correctly (see Cable, Wire, and Hose Routing section in the Appendix chapter).
- Install the clamp to the hold the quick shifter lead.

○Position the clamp to the constricted part of the tie-rod.

○Face the knob of the clamp to the inward.

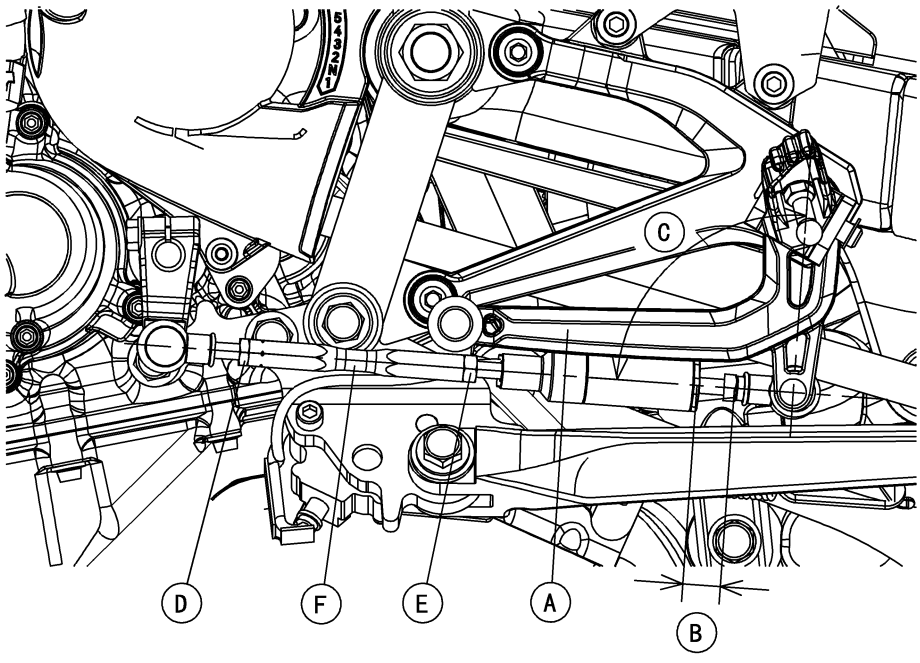

- Install the removed parts (see appropriate chapters).

External Shift Mechanism

External Shift Mechanism Removal

- Remove:
  Shift Lever (see Shift Pedal Removal)
  Clutch Cover (see Clutch Cover Removal in the Clutch chapter)
  Circlip [A]
  Shift Shaft Assembly [B]
  Washers [C]

Special Tool - Outside Circlip Pliers: 57001-144

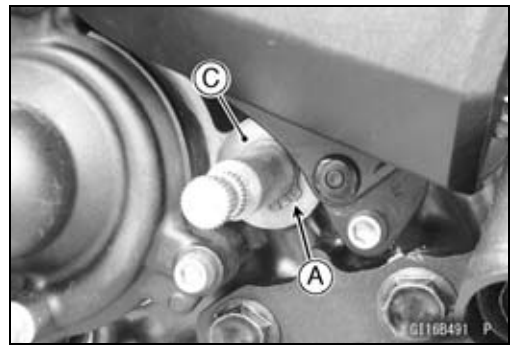

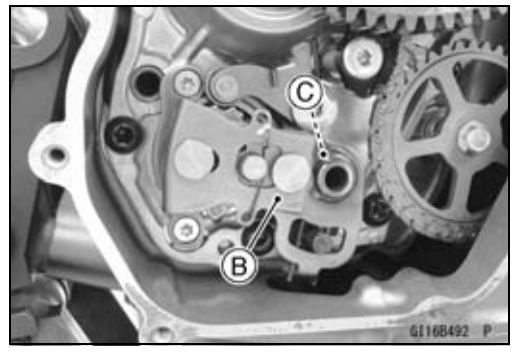

- Remove:
  Gear Positioning Lever Bolt [A]
  Gear Positioning Lever [B]
  Washer and Spring [C]

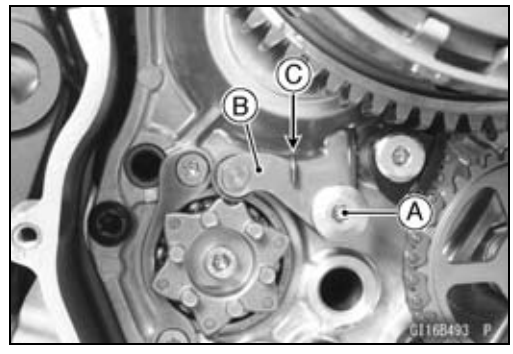

External Shift Mechanism Installation

- Install the gear positioning lever [A] as shown.
- Install:
  Spring [B]
  Washer [C]
- Tighten:

Torque - Gear Positioning Lever Bolt [D]: 12 N·m (1.2 kgf·m, 106 in·lb)

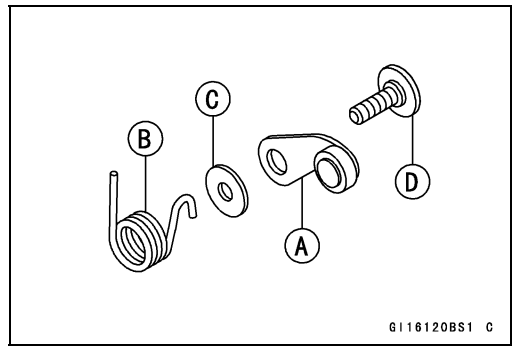

- Replace the oil seal [A] with a new one.
- Apply grease to the lips of the oil seal.

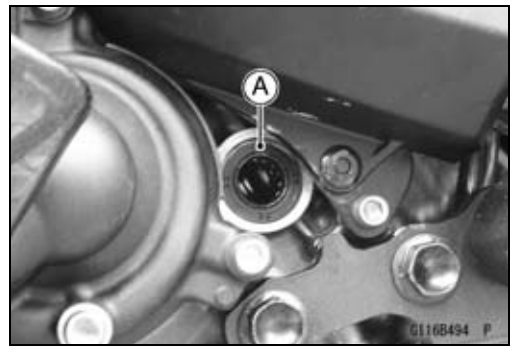

External Shift Mechanism

● Install:
Shift Shaft Assembly [A] and Washers
○Fit the hole [B] and return spring pin [C].

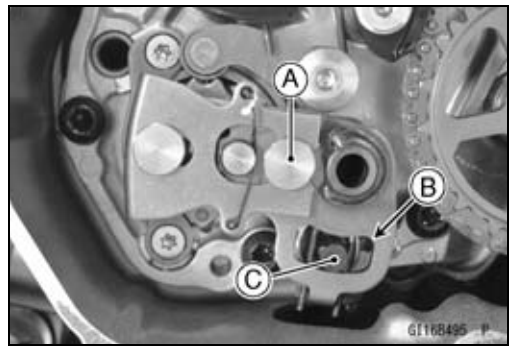

● Replace the circlip [A] with a new one.
● Install:
Circlip

Special Tool - Outside Circlip Pliers: 57001-144

○Fit the circlip into the groove of the shift shaft securely.
● Install the removed parts (see appropriate chapters).

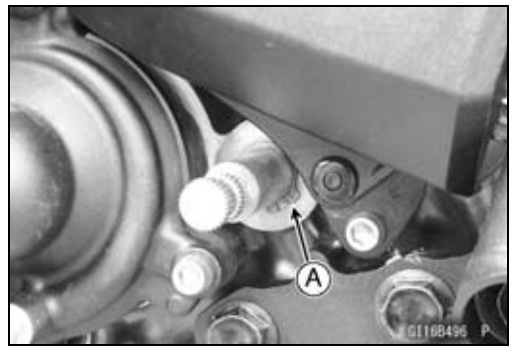

External Shift Mechanism Inspection

● Examine the shift shaft [A] for any damage.
★If the shaft is bent, replace it.
★If the serration [B] is damaged, replace the shaft.
★If the springs [C] are damaged in any way, replace them.
★If the shift mechanism arm [D] is damaged in any way, replace the shaft.

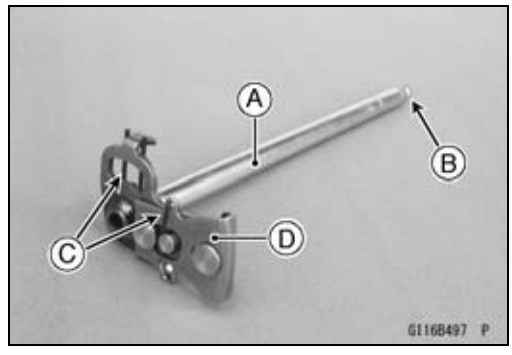

● Measure the smallest clearance [A] between the shim [B] and return spring [C].

Return Spring, Shim Clearance
Standard: 0.1 ~ 0.5 mm (0.004 ~ 0.020 in.)

★If any clearance exceeds the standard, note the following.
● Remove the snap ring [D] and shim.

Special Tool - Outside Circlip Pliers: 57001-144

● Select a new shim thickness calculation as follows.
a + b – c = d
[a] Present Shim Thickness
[b] Measured Clearance
[c] Specified Clearance
[d] Replace Shim Thickness

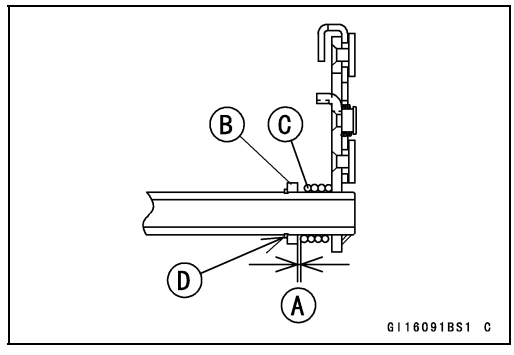

Thickness	Parts Number
2.6 mm (0.10 in.)	92180-0963
2.8 mm (0.11 in.)	92180-0964
3.0 mm (0.12 in.)	92180-0965
3.2 mm (0.13 in.)	92180-0966
3.4 mm (0.13 in.)	92180-0967

● Install the shim and new snap ring.

Special Tool - Outside Circlip Pliers: 57001-144

External Shift Mechanism

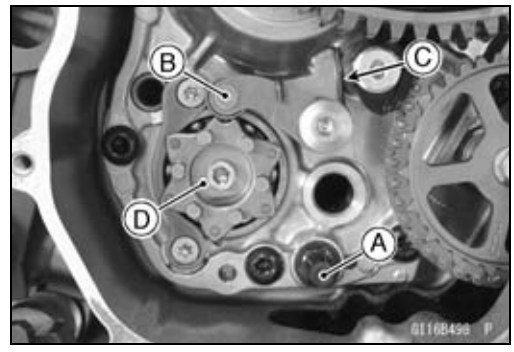

- Check the return spring pin [A] is not loose.

★If it is loose, remove it, apply a non-permanent locking agent to the threads, and tighten it.

Torque - Shift Shaft Return Spring Pin: 29 N·m (3.0 kgf·m, 21 ft·lb)

- Check the gear positioning lever [B] and spring [C] for breaks or distortion.

★If the lever or spring are damaged in any way, replace them.

- Visually inspect the shift drum cam [D].

★If they are badly worn or if they show any damage, replace it.

Wheels/Tires

Table of Contents

Exploded View 10-2
Specifications 10-4
Special Tools 10-5
Wheels (Rims) 10-6
Front Wheel Removal 10-6
Front Wheel Installation 10-6
Front Wheel Inspection 10-8
Rear Wheel Removal 10-8
Rear Wheel Installation 10-9
Rear Wheel Inspection 10-9
Axle Inspection 10-10
Balance Inspection 10-11
Balance Adjustment 10-11
Balance Weight Removal 10-12
Balance Weight Installation 10-12
Tires 10-14
Air Pressure Inspection/Adjustment 10-14
Tire Inspection 10-14
Tire Removal 10-14
Tire Installation 10-14
Tire Repair 10-16
Hub Bearing 10-17
Front Hub Bearing Removal 10-17
Front Hub Bearing Installation 10-17
Front Hub Bearing Inspection 10-18
Front Hub Bearing Lubrication 10-18

Exploded View

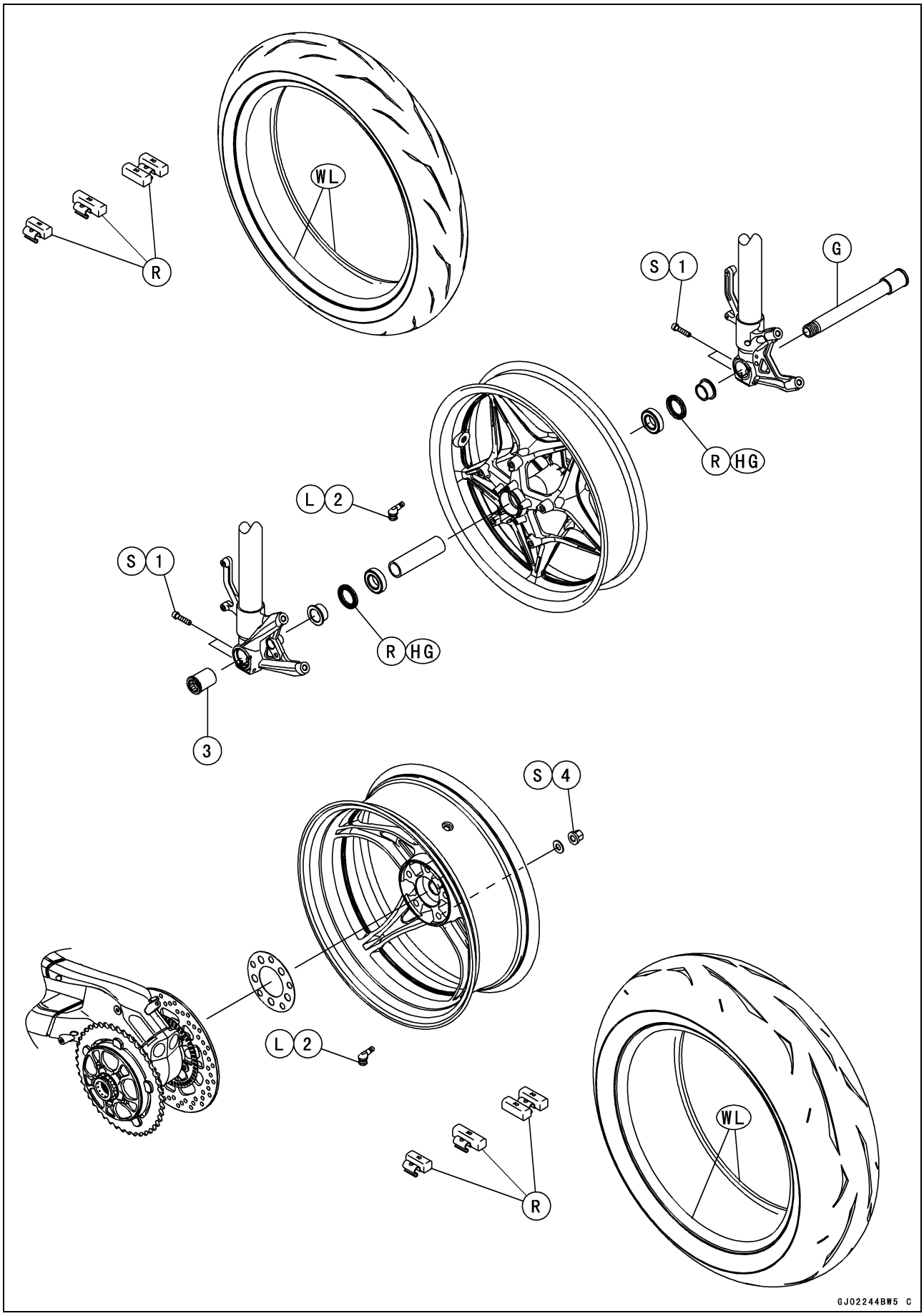

Exploded View

No.	Fastener	Torque			Remarks
		N·m	kgf·m	ft·lb	
1	Front Axle Clamp Bolts	20	2.0	15	S
2	Air Valve Nuts	4.5	0.46	40 in·lb	L
3	Front Axle Nut	127	13.0	93.7	
4	Rear Wheel Nuts	110	11.2	81.1	S

G: Apply grease.
HG: Apply high-temperature grease.
L: Apply a non-permanent locking agent.
R: Replacement Parts
S: Follow the specified tightening sequence.
WL: Apply soap and water solution or rubber lubricant.

Specifications

Item	Standard	Service Limit
Wheels (Rims)		
Rim Runout:		
Front:		
Axial	TIR 0.5 mm (0.02 in.) or less	TIR 1.0 mm (0.04 in.)
Radial	TIR 0.8 mm (0.03 in.) or less	TIR 1.0 mm (0.04 in.)
Rear:		
Axial	TIR 0.3 mm (0.01 in.) or less	TIR 1.0 mm (0.04 in.)
Radial	TIR 0.5 mm (0.02 in.) or less	TIR 1.0 mm (0.04 in.)
Axle Runout/100 mm (3.94 in.):		
Front	TIR 0.03 mm (0.001 in.) or less	TIR 0.2 mm (0.008 in.)
Wheel Balance	10 g (0.35 oz.) or less	– – –
Balance Weights	10 g (0.35 oz.), 20 g (0.71 oz.), 30 g (1.06 oz.)	– – –
Rim Size:		
Front	J17M/C × MT3.50	– – –
Rear	J17M/C × MT6.00	– – –
Tires		
Air Pressure (when Cold):		
Front	Up to 105 kg (231 lb) load: 250 kPa (2.50 kgf/cm², 36 psi)	– – –
Rear	Up to 105 kg (231 lb) load: 290 kPa (2.90 kgf/cm², 42 psi)	– – –
Tread Depth:		
Front	3.6 mm (0.14 in.)	1 mm (0.04 in.) (AT, CH, DE) 1.6 mm (0.06 in.)
Rear	5.0 mm (0.20 in.)	Up to 130 km/h (80 mph): 2 mm (0.08 in.) Over 130 km/h (80 mph): 3 mm (0.12 in.)
Standard Tires:	Make, Type	Size
Front	BRIDGESTONE, BATTLAX RACING STREET, RS10F J	120/70 ZR 17M/C (58W)
Rear	BRIDGESTONE, BATTLAX RACING STREET, RS10R L	200/55 ZR 17M/C (78W)

⚠ WARNING

Some replacement tires may adversely affect handling and cause an accident resulting in serious injury or death. To ensure proper handling and stability, use only the recommended standard tires for replacement, inflated to the standard pressure.

Special Tools

Bearing Driver Set:
57001-1129

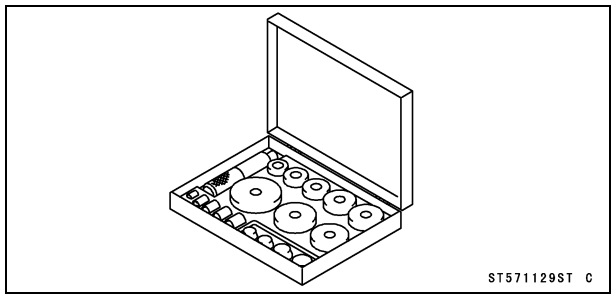

Bearing Remover Shaft, ϕ13:
57001-1377

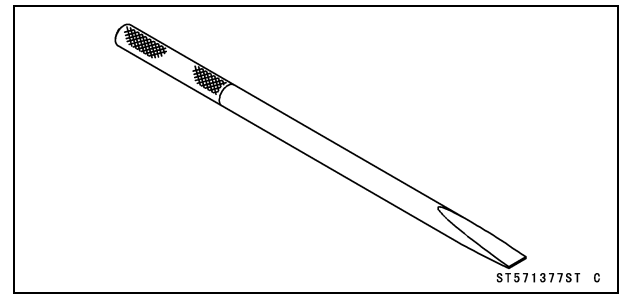

Bearing Remover Head, ϕ25 × ϕ28:
57001-1346

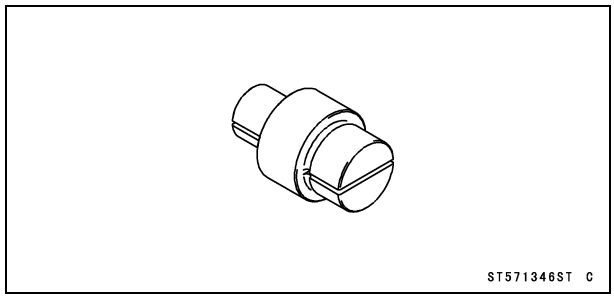

Wheel Balance Adjustment Tool:
57001-1832

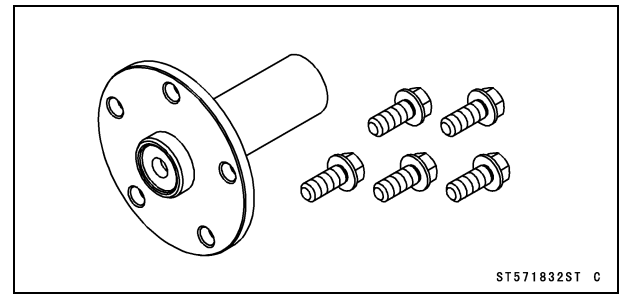

Wheels (Rims)

Front Wheel Removal

- Remove the front caliper mounting bolts [A] on both sides.
- Remove the clamp [B] to free the brake hose.
- Take the front calipers off the fork legs.

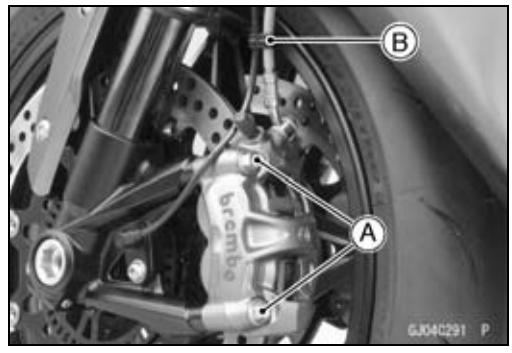

- Loosen:
  Front Axle Clamp Bolts [A]

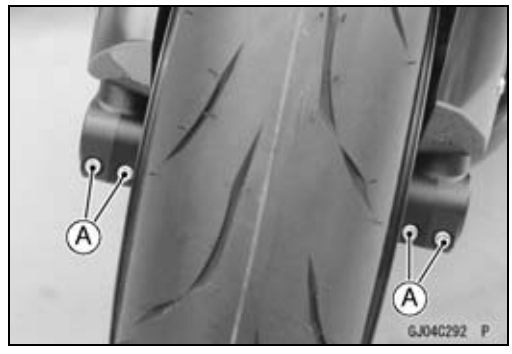

- Loosen:
  Front Axle Nut [A]
- Raise the front wheel off the ground with a suitable stand.
- Remove:
  Front Axle
  Front Axle Nut
  Front Wheel



NOTICE
Do not lay the wheel down on one of the discs. This can damage or warp the disc. Place blocks under the wheel so that the disc does not touch the ground.

Front Wheel Installation

- Apply high-temperature grease to the grease seal lips.
- Fit the collars [A] on both sides of the hub.

○The collars are identical.

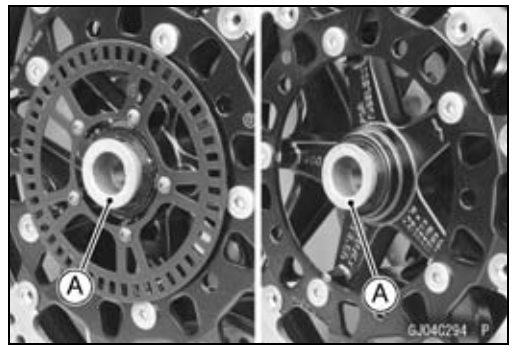

Wheels (Rims)

- Apply a thin coat of grease [A] to the front axle [B].
  About 10 mm (0.4 in.) [C]
  About 30 mm (1.2 in.) [D]

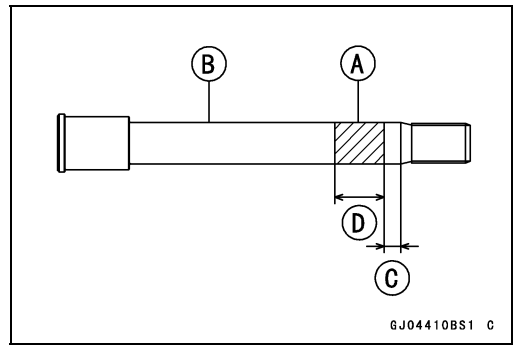

NOTE

○*Do not apply grease to the threads of the axle.*

NOTE

○*The wheel rotation direction [A] is shown by an arrow [B] on the wheel spoke.*

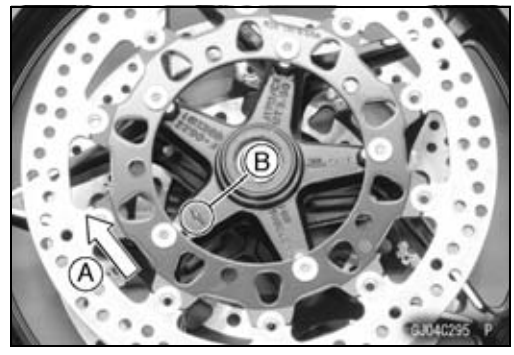

- Check the wheel rotation mark on the front wheel and install it.
- Insert the front axle from the right side.
- Tighten:

Torque - Front Axle Nut: 127 N·m (13.0 kgf·m, 93.7 ft·lb)

- Check that the wheel rotates smoothly.

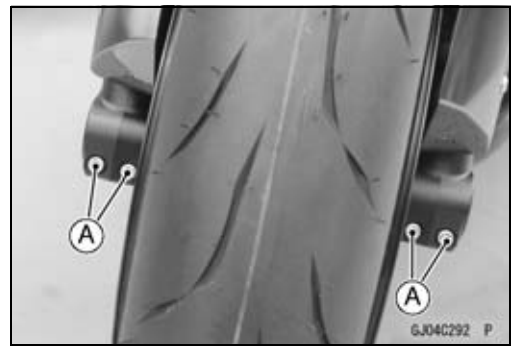

- Install the brake calipers temporarily.
- Before tightening the front axle clamp bolts [A] on the front fork legs, pump the front fork up and down 4 or 5 times to allow the front fork legs to seat on the front axle.

NOTE

○*Put a block in front of the front wheel to stop moving.*

- Tighten:

Torque - Front Axle Clamp Bolts: 20 N·m (2.0 kgf·m, 15 ft·lb)

○Tighten the inside clamp bolts first.
○After tightening the outside clamp bolts, tighten the inside clamp bolts again.
○There will be a gap at the slit of the front fork legs after tightening.

- Install the removed parts (see appropriate chapters).

NOTE

○*Install the front calipers following the specified procedures (see Front Caliper Installation in the Brakes chapter).*

- Check the front brake effectiveness (see Brake Operation Inspection in the Periodic Maintenance chapter).

⚠ WARNING

After servicing, it takes several applications of the brake lever before the brake pads contact the disc, which could result in increased stopping distance and cause an accident resulting in injury or death. Do not attempt to ride the motorcycle until a firm brake lever is obtained by pumping the lever until the pads are against the disc.

Wheels (Rims)

Front Wheel Inspection

- Raise the front wheel off the ground with a suitable stand.
- Spin the front wheel lightly, and check for roughness or binding.

★If roughness or binding is found, replace the front hub bearings (see Front Hub Bearing Removal/Installation).

- Inspect the front wheel for small cracks, dents, bending, or warp.

★If there is any damage on the front wheel, replace it with a new one.

- Remove the front wheel with the tire, and support it by the axle.
- Measure the rim runout, axial [A] and radial [B], with a dial gauge.

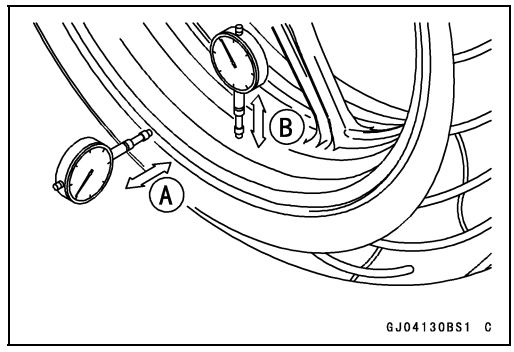

Front Wheel Rim Runout (with tire installed)

Standard:

Axial	**TIR 0.5 mm (0.02 in.) or less**
Radial	**TIR 0.8 mm (0.03 in.) or less**

Service Limit:

Axial	**TIR 1.0 mm (0.04 in.)**
Radial	**TIR 1.0 mm (0.04 in.)**

★If the rim runout exceeds the service limit, check the hub bearings (see Hub Bearing Inspection).

★If the problem is not due to the bearings, replace the wheel.

⚠ WARNING

Damaged wheel parts may fail and cause an accident resulting in serious injury or death. Never attempt to repair a damaged wheel part. If the wheel part is damaged, it must be replaced with a new one.

Rear Wheel Removal

- Remove:
  Muffler Body (see Muffler Body Removal in the Engine Top End chapter)
- Loosen the rear wheel nuts [A].
- Raise the rear wheel off the ground with the stand.

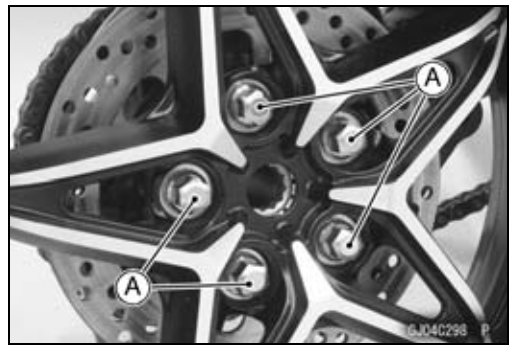

Wheels (Rims)

- Remove:
  Rear Wheel Nuts [A]
  Washers [B]
  Rear Wheel [C]

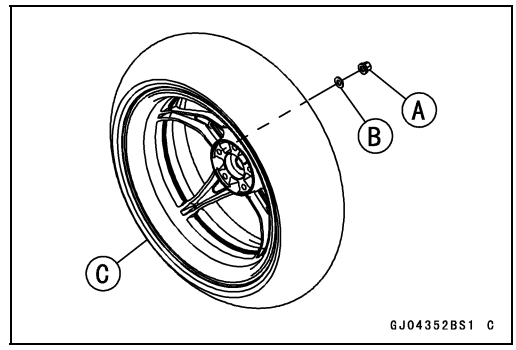

Rear Wheel Installation

- Be sure to install the plate [A].
- Install:
  Rear Wheel [B]
  Washers [C]
- Tighten the rear wheel nuts [D] to a snug fit following the specified sequence [1 ~ 6].
- Tighten the rear wheel nuts to the specified torque with the same sequence.

  Torque - Rear Wheel Nuts: 110 N·m (11.2 kgf·m, 81.1 ft·lb)
- Install the removed parts (see appropriate chapters).

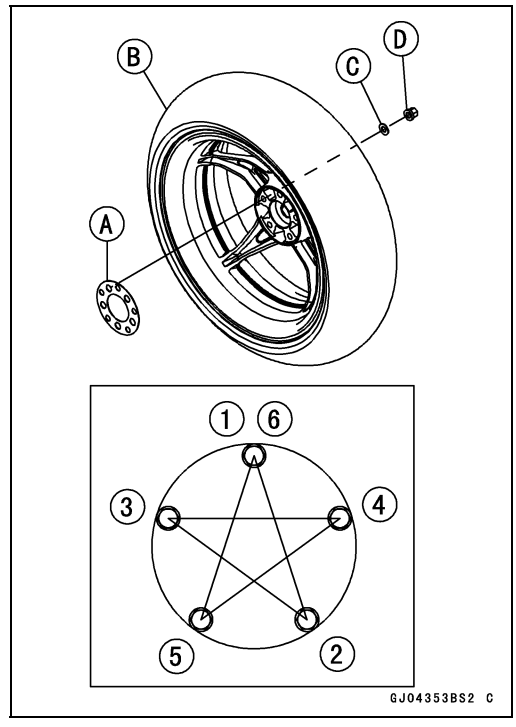

Rear Wheel Inspection

- Raise the rear wheel off the ground with the stand.
- Spin the rear wheel lightly, and check for roughness or binding.

★If roughness or binding is found, replace the following parts.
  Coupling Bearing (see Coupling Bearing Removal/Installation in the Final Drive chapter)
  Bearing Housing Bearings (see Bearing Housing Bearing Removal/Installation in the Final Drive chapter)

- Inspect the rear wheel for small cracks, dents, bending, or warp.

★If there is any damage to the rear wheel, replace it with a new one.

Wheels (Rims)

● Remove the rear wheel with the tire, and support it using the special tool.

Special Tool - Wheel Balance Adjustment Tool: 57001 -1832

○Install the tool [A] to the left side.

○Install the washers of the rear wheel nuts, and tighten the wheel hub mounting bolts [B] of the special tool.

Torque - Wheel Hub Mounting Bolts: 15 N·m (1.5 kgf·m, 11 ft·lb)

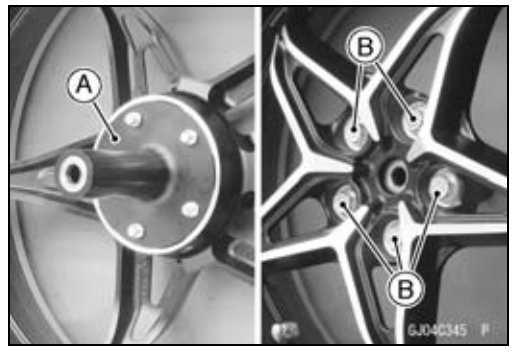

● Measure the rim runout, axial [A] and radial [B], with a dial gauge.

Rear Wheel Rim Runout (with tire installed)

Standard:

Axial	**TIR 0.3 mm (0.01 in.) or less**
Radial	**TIR 0.5 mm (0.02 in.) or less**

Service Limit:

Axial	**TIR 1.0 mm (0.04 in.)**
Radial	**TIR 1.0 mm (0.04 in.)**

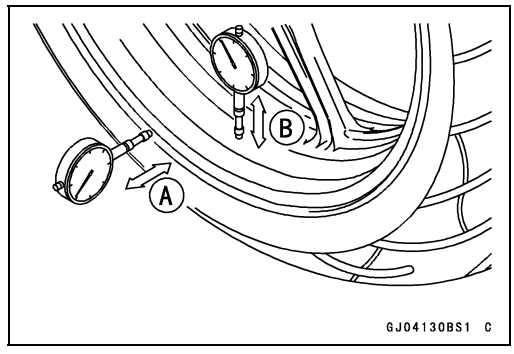

★If the rim runout exceeds the service limit, replace the wheel with a new one.

⚠ WARNING

Damaged wheel parts may fail and cause an accident resulting in serious injury or death. Never attempt to repair a damaged wheel part. If the wheel part is damaged, it must be replaced with a new one.

Axle Inspection

● Remove:
Front Axle (see Front Wheel Removal)
Rear Axle (see Bearing Housing Removal in the Final Drive chapter)

★If the front or rear axle is damaged or bent, replace it with a new one.

● Place the front axle in V blocks that are 100 mm (3.94 in.) [A] apart, and set a dial gauge [B] on the front axle at a point halfway between the blocks. Turn [C] the front axle to measure the runout. The difference between the highest and lowest dial readings is the amount of runout.

Front Axle Runout/100 mm (3.94 in.)

Standard:	**TIR 0.03 mm (0.001 in.) or less**
Service Limit:	**TIR 0.2 mm (0.008 in.)**

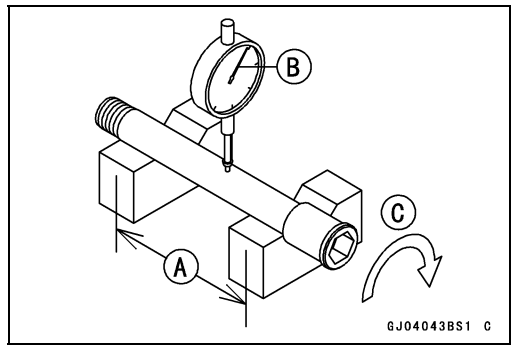

★If the front axle runout exceeds the service limit, replace it with a new one.

Wheels (Rims)

Balance Inspection

Front Wheel

- Remove the front wheel (see Front Wheel Removal).
- Support the front wheel so that it can be spun freely.
- Spin the front wheel lightly, and mark [A] the front wheel at the top when the wheel stops.

○Repeat this procedure several times. If the wheel stops of its own accord in various positions, it is well balanced.

★If the front wheel always stops in one position, adjust the wheel balance (see Balance Adjustment).

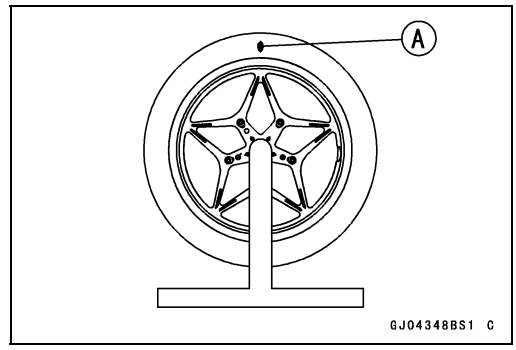

Rear Wheel

- Remove the rear wheel (see Rear Wheel Removal).
- Support the rear wheel so that it can be spun freely.

Special Tool - Wheel Balance Adjustment Tool: 57001 -1832

○Install the tool [A] to the left side.

○Install the washers of the rear wheel nuts, and tighten the wheel hub mounting bolts [B] of the special tool.

Torque - Wheel Hub Mounting Bolts: 15 N·m (1.5 kgf·m, 11 ft·lb)

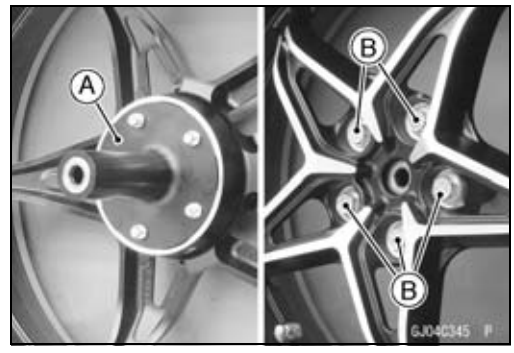

- Spin the rear wheel lightly, and mark [A] the rear wheel at the top when the wheel stops.

○Repeat this procedure several times. If the wheel stops of its own accord in various positions, it is well balanced.

★If the rear wheel always stops in one position, adjust the wheel balance (see Balance Adjustment).

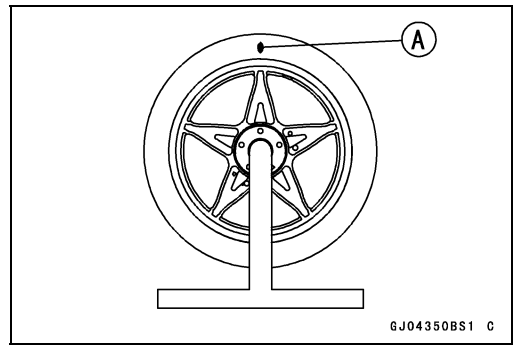

Balance Adjustment

- If the wheel always stops in one position, provisionally attach a balance weight [A] on the rim at the marking using adhesive tape.
- Rotate the wheel 1/4 turn [B], and see whether or not the wheel stops in this position. If it does, the correct balance weight is being used.
  Front Wheel [C]
  Rear Wheel [D]

★If the wheel rotates and the weight goes up, replace the weight with the next heavier size. If the wheel rotates and the weight goes down, replace the weight with the next lighter size. Repeat these steps until the wheel remains at rest after being rotated 1/4 turn.

- Rotate the wheel another 1/4 turn and then another 1/4 turn to see if the wheel is correctly balanced.
- Repeat the entire procedure as many times as necessary to achieve correct wheel balance.
- Permanently install the balance weight.

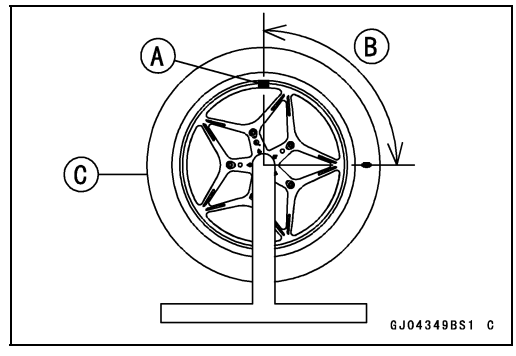

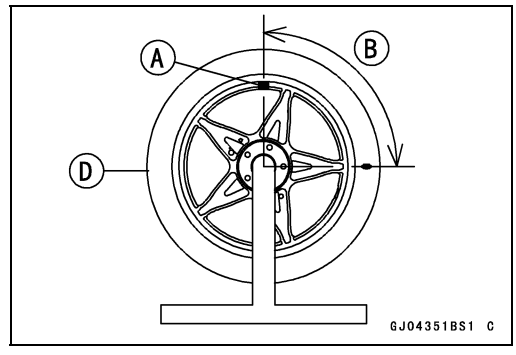

Wheels (Rims)

Balance Weight Removal

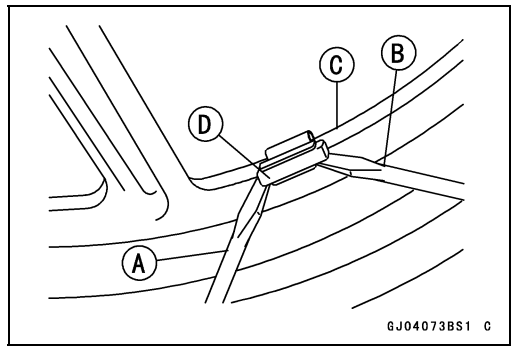

- Insert a flat tip screwdrivers [A] [B] between the rib [C] and weight [D] as shown.
- Pry the balance weight with two screwdrivers and remove the balance weight.
- Discard the used balance weight.

NOTICE
Do not tap the screwdrivers. The rim could be damaged.

Balance Weight Installation

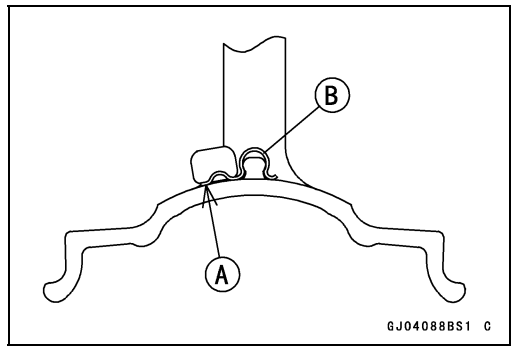

- Check if the weight portion has any play on the blade [A] and clip [B].

★If it does, discard it.

⚠ WARNING
Unbalanced wheels can create an unsafe riding condition. If the balance weight has any play on the rib of the rim, the blade and/or clip have been stretched. Replace the loose balance weight. Do not reuse used balance weight.

Balance Weight

Part Number	Weight
41075-0007	10 g (0.35 oz.)
41075-0008	20 g (0.71 oz.)
41075-0017	30 g (1.06 oz.)

NOTE

○*Balance weights are available from Kawasaki dealers in 10, 20 and 30 grams (0.35, 0.71 and 1.06 oz.) sizes. An imbalance of less than 10 grams (0.35 oz.) will not usually affect running stability.*

○*Do not use four or more balance weights (more than 90 grams, 3.2 oz.). If the wheel requires an excess balance weight, disassemble the wheel to find the cause.*

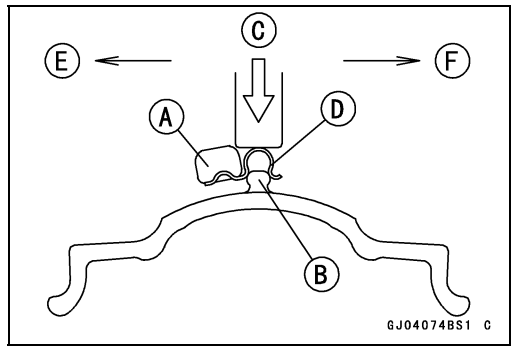

- Slip the balance weight [A] onto the rib [B] by pushing or lightly hammering [C] the clip [D].
  Left Side [E]
  Right Side [F]

Wheels (Rims)

● Be sure to install the balance weight.

○Check that the blade [A] and clip [B] are fully seated on the rim [C] and that the clip is hooked over the rib [D].
Left Side [E]
Right Side [F]

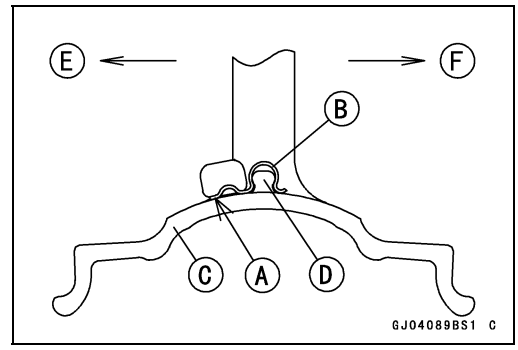

Tires

Air Pressure Inspection/Adjustment

- Refer to the Air Pressure Inspection in the Periodic Maintenance chapter.

Tire Inspection

- Refer to the Wheels and Tires Inspection in the Periodic Maintenance chapter.

Tire Removal

- Remove:
  Wheels (see Front/Rear Wheel Removal)
  Valve Core (Let out the air)
- To maintain wheel balance, mark the valve stem position on the tire with chalk so that the tire can be reinstalled in the same position.
  Chalk Mark or Yellow Mark [A]
  Valve Stem [B]
  Align [C]

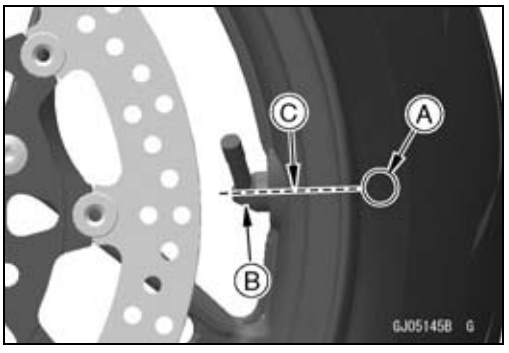

- Lubricate the tire beads and rim flanges on both sides with a soap and water solution or rubber lubricant. This helps the tire beads slip off the rim flanges.

NOTICE
Never lubricate with engine oil or petroleum distillates because they will deteriorate the tire.

- Remove the tire from the rim using a suitable commercially available tire changer.

NOTE

○*The tires cannot be removed with hand tools because they fit the rims too tightly.*

Tire Installation

⚠ WARNING
Some replacement tires may adversely affect handling and cause an accident resulting in serious injury or death. To ensure proper handling and stability, use only the recommended standard tires for replacement, inflated to the standard pressure.

- Inspect the rim and tire, and replace them if necessary.
- Clean the sealing surfaces of the rim and tire, and smooth the sealing surfaces of the rim with a fine emery cloth if necessary.
- Remove the air valve and discard it.

NOTICE
Replace the air valve whenever the tire is replaced. Do not reuse the air valve.

Tires

- Install a new valve [A] in the rim.
  45° [B]
  Front [C]
  Right [D]
- Apply a non-permanent locking agent to the threads of air valve nut.
- Tighten the valve nut.

Torque - Air Valve Nuts: 4.5 N·m (0.46 kgf·m, 40 in·lb)

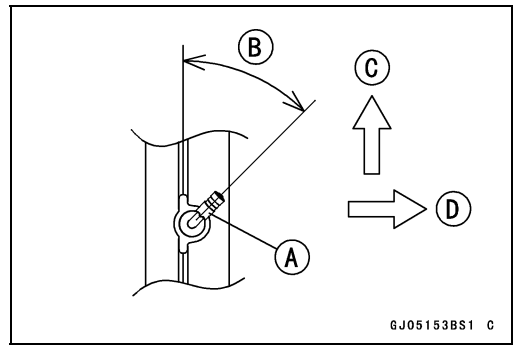

○The air valve is as shown.
Valve Cap [A]
Valve Core [B]
Valve Stem [C]
Valve Nut [D]

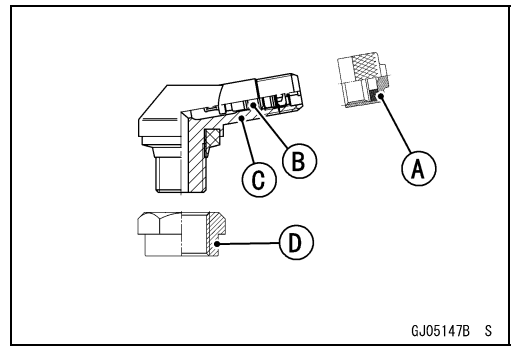

- Check the tire rotation mark on the front and rear tires and install them on the rim accordingly.
  Tire Rotation Mark [A]
  Rotating Direction [B]

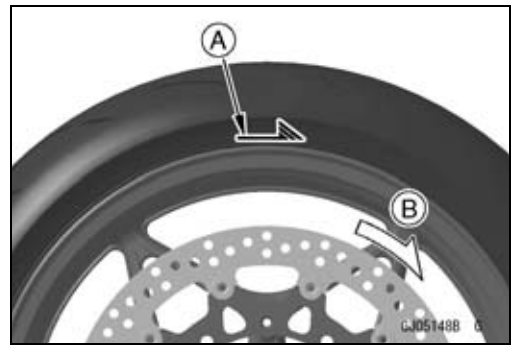

- Position the tire on the rim so that the valve [A] align with the tire balance mark [B] (the chalk mark made during removal, or the yellow paint mark on a new tire).
- Install the tire bead over the rim flange using a suitable commercially available tire changer.
- Lubricate the tire beads and rim flanges with a soap and water solution or rubber lubricant to help seat the tire beads in the sealing surfaces of the rim while inflating the tire.
- Center the rim in the tire beads, and inflate the tire with compressed air until the tire beads seat in the sealing surfaces.

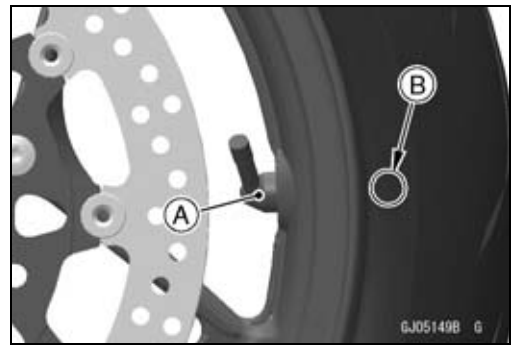

⚠ WARNING

Overinflating a tire can cause it to explode, causing serious injury or death. Be sure to install the valve core whenever inflating the tire, and do not inflate the tire to more than 400 kPa (4.0 kgf/cm², 57 psi).

Tires

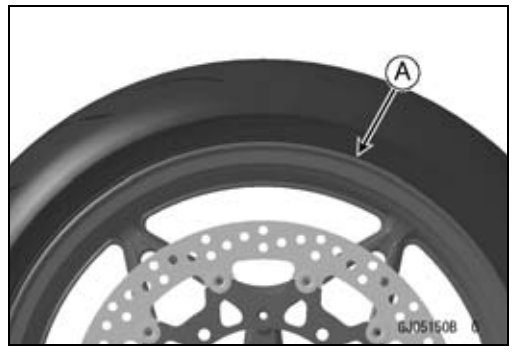

- Check to see that the rim lines [A] on both sides of the tire sidewalls are parallel with the rim flanges.

★If the rim flanges and tire sidewall rim lines are not parallel, remove the valve core.

- Lubricate the rim flanges and tire beads.
- Install the valve core and inflate the tire again.
- After the tire beads seat in the rim flanges, check for air leakage.

○Inflate the tire slightly above standard inflation.

○Use a soap and water solution or submerge the tire, and check for bubbles that would indicate leakage.

- Adjust the air pressure to the specified pressure (see Air Pressure Inspection in the Periodic Maintenance chapter).
- Install the air valve cap.
- Adjust the wheel balance (see Balance Adjustment).

Tire Repair

Currently two types of repair for tubeless tires have come into wide use. One type is called a temporary (external) repair which can be carried out without removing the tire from the rim, and the other type is called permanent (internal) repair which requires tire removal. It is generally understood that higher running durability is obtained by permanent (internal) repairs than by temporary (external) ones. Also, permanent (internal) repairs have the advantage of permitting a thorough examination for secondary damage not visible from external inspection of the tire. For these reasons, Kawasaki does not recommend temporary (external) repair. Only appropriate permanent (internal) repairs are recommended. Repair methods may vary slightly from make to make. Follow the repair methods indicated by the manufacturer of the repair tools and materials so that safe results can be obtained.

Hub Bearing

Front Hub Bearing Removal

- Remove the front wheel (see Front Wheel Removal), and take out the following.
  Collars [A]
  Grease Seals [B]

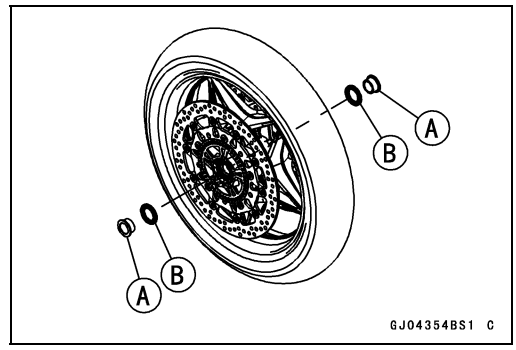

- Use the bearing remover to remove the hub bearings [A].

NOTICE

Do not lay the wheel on the ground with the disc facing down. This can damage or warp the disc. Place blocks under the wheel so that the disc does not touch the ground.

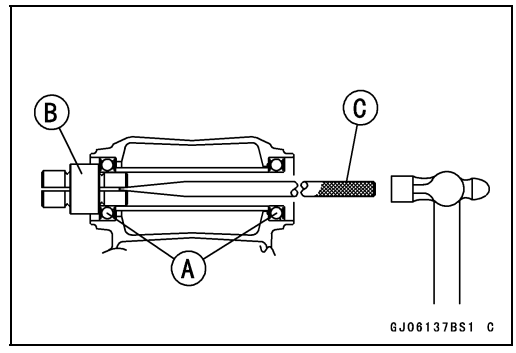

Special Tools - Bearing Remover Head, ϕ25 × ϕ28 [B]: 57001-1346
Bearing Remover Shaft, ϕ13 [C]: 57001 -1377

Front Hub Bearing Installation

- Before installing the hub bearings, blow any dirt or foreign particles out of the hub with compressed air to prevent contamination of the bearings.
- Replace the bearings with new ones.
- Install the bearings by using the bearing driver set which does not contact the bearing inner race.

NOTE

○*Install the bearings so that the marked side faces out.*

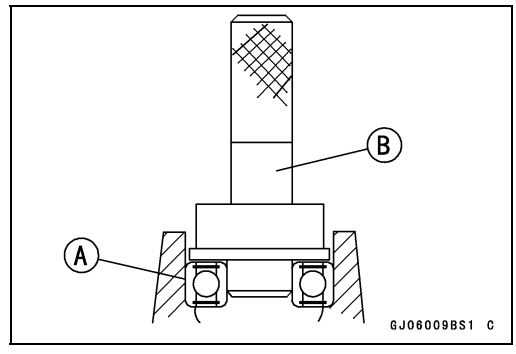

- Press in the right bearing [A] until it is bottomed.

Special Tool - Bearing Driver Set [B]: 57001-1129

- Replace the grease seals with new ones.
- Press in the grease seals [A] so that the seal surface is flush [B] with the end of the hole.

○Apply high-temperature grease to the grease seal lips.

Special Tool - Bearing Driver Set [C]: 57001-1129

- Install the removed parts (see appropriate chapters).

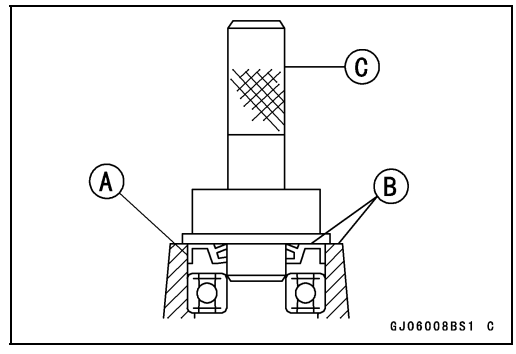

Hub Bearing

Front Hub Bearing Inspection

Since the hub bearings are made to extremely close tolerances, the clearance can not normally be measured.

NOTE

○*Do not remove any bearings for inspection. If any bearings are removed, they will need to be replaced with new ones.*

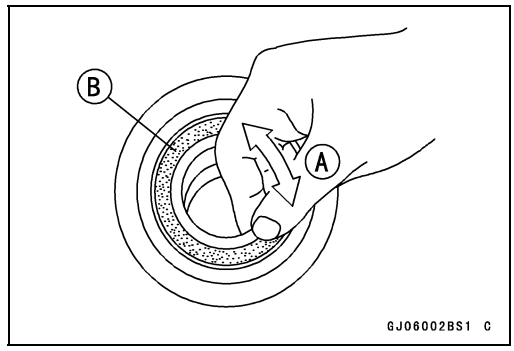

- Turn each bearing in the hub back and forth [A] while checking for plays, roughness, or binding.

★If bearing play, roughness, or binding is found, replace the bearing.

- Examine the bearing seal [B] for tears or leakage.

★If the seal is torn or is leaking, replace the bearing.

Front Hub Bearing Lubrication

NOTE

○*Since the hub bearings are packed with grease and sealed, lubrication is not required.*

Final Drive

Table of Contents

Exploded View 11-2
Specifications 11-4
Special Tools 11-5
Drive Chain 11-6
Drive Chain Slack Inspection 11-6
Drive Chain Slack Adjustment 11-6
Drive Chain Wear Inspection 11-6
Drive Chain Lubrication 11-6
Drive Chain Removal 11-6
Drive Chain Installation 11-6
Drive Chain Replacement 11-6
Sprocket, Coupling 11-10
Engine Sprocket Removal 11-10
Engine Sprocket Installation 11-11
Rear Sprocket Removal 11-12
Rear Sprocket Installation 11-12
Coupling Removal 11-13
Coupling Installation 11-13
Coupling Bearing Removal 11-14
Coupling Bearing Installation 11-15
Coupling Bearing Inspection 11-15
Coupling Bearing Lubrication 11-15
Coupling Damper Inspection 11-16
Bearing Housing Removal 11-16
Bearing Housing Installation 11-16
Bearing Housing Bearing Removal 11-17
Bearing Housing Bearing Installation 11-17
Bearing Housing Bearing Inspection 11-18
Sprocket Wear Inspection 11-18
Rear Sprocket Warp Inspection 11-18

Exploded View

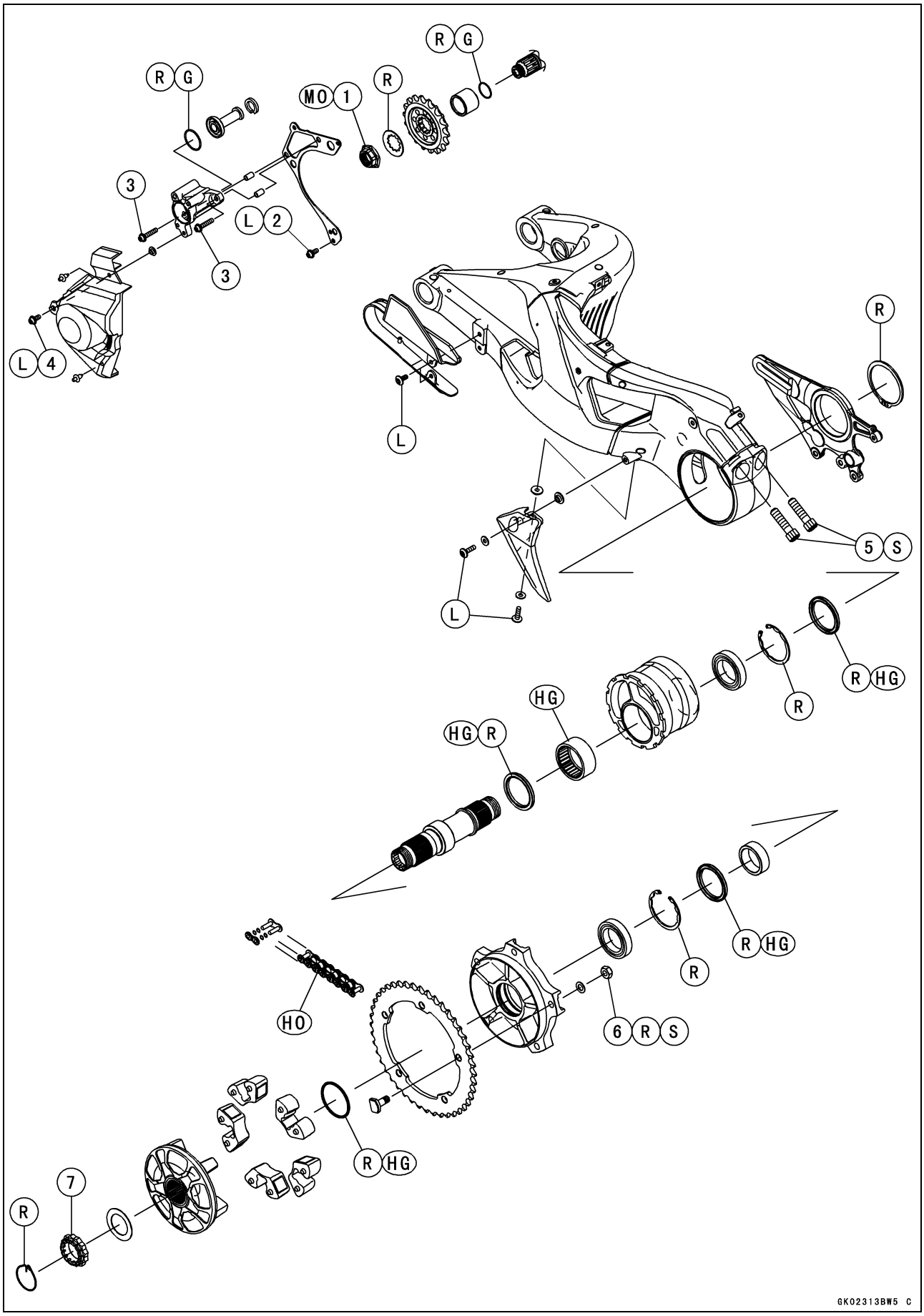

Exploded View

No.	Fastener	Torque			Remarks
		N·m	kgf·m	ft·lb	
1	Engine Sprocket Nut	145	14.8	107	MO
2	Drive Chain Guide Bolt (L = 14 mm)	10	1.0	89 in·lb	L
3	Drive Chain Guide Bolts (L = 30 mm)	10	1.0	89 in·lb	
4	Engine Sprocket Cover Bolt	10	1.0	89 in·lb	L
5	Bearing Housing Clamp Bolts	33	3.4	24	S
6	Rear Sprocket Nuts	59	6.0	44	R, S
7*	Rear Axle Nut, First	220	22.4	162	
	Rear Axle Nut, Final	255	26.0	188	

G: Apply grease.
HG: Apply high-temperature grease.
HO: Apply heavy oil (for seal chain).
L: Apply a non-permanent locking agent.
MO: Apply molybdenum disulfide oil solution.
(mixture of the engine oil and molybdenum disulfide grease in a weight ratio 10:1)
R: Replacement Parts
S: Follow the specified tightening sequence.

*: After tightening to the first torque, loosen it and tighten to the final torque.

Specifications

Item	Standard	Service Limit
Drive Chain		
Drive Chain Slack	25 ~ 35 mm (1.0 ~ 1.4 in.)	– – –
Drive Chain Wear (20-link Length)	317.5 ~ 318.2 mm (12.50 ~ 12.53 in.)	319 mm (12.6 in.)
Standard Chain:		
Make	ENUMA	– – –
Type	EK525RMXZ/3D	– – –
Link	118 links	– – –
Link Pin Outside Diameter (When drive chain replacing)	5.9 ~ 6.2 mm (0.23 ~ 0.24 in.)	– – –
Link Plates Outside Width (When drive chain replacing)	20.75 ~ 20.90 mm (0.8169 ~ 0.8228 in.)	– – –
Sprockets		
Rear Sprocket Warp	TIR 0.4 mm (0.016 in.) or less	TIR 0.5 mm (0.020 in.)

Special Tools

Inside Circlip Pliers:
57001-143

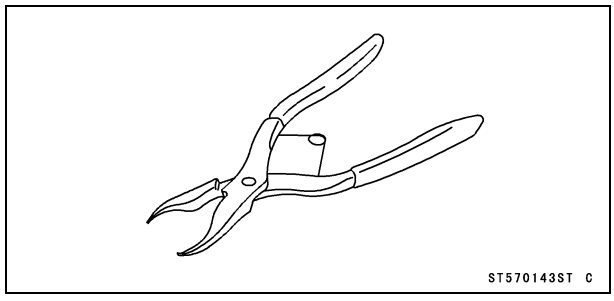

Outside Circlip Pliers:
57001-144

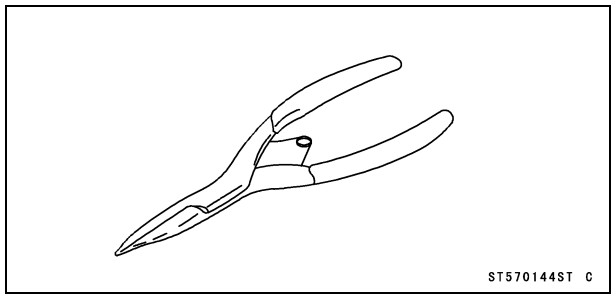

Bearing Driver Set:
57001-1129

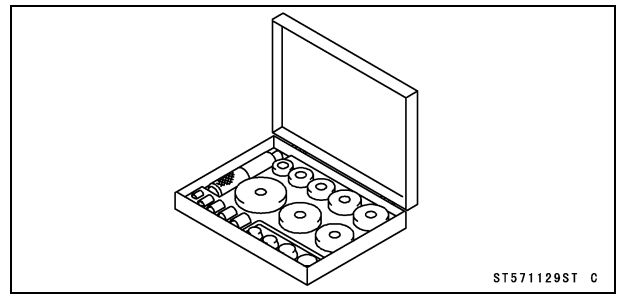

Drive Chain

Drive Chain Slack Inspection

- Refer to the Drive Chain Slack Inspection in the Periodic Maintenance chapter.

Drive Chain Slack Adjustment

- Refer to the Drive Chain Slack Adjustment in the Periodic Maintenance chapter.

Drive Chain Wear Inspection

- Refer to the Drive Chain Wear Inspection in the Periodic Maintenance chapter.

Drive Chain Lubrication

- Refer to the Drive Chain Lubrication Condition Inspection in the Periodic Maintenance chapter.

Drive Chain Removal

- Refer to the Drive Chain Replacement.

Drive Chain Installation

- Refer to the Drive Chain Replacement.

Drive Chain Replacement

NOTICE
For safety, if the drive chain shall be replaced, replace it using a recommended tool.

Recommended Tool - Type: EK Joint Tool #50
Brand: ENUMA

Body [A]
Handlebar [B]
Cutting and Riveting Pin [C]
For Cutting [D]
For Riveting [E]
Plate Holder (A) [F]
Plate Holder (B) [G]
Gauge [H]

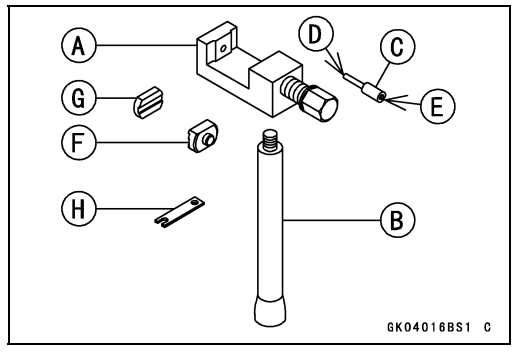

- Grind [A] the pin head to make it flat.
- Set the cutting and riveting pin [B] as shown.

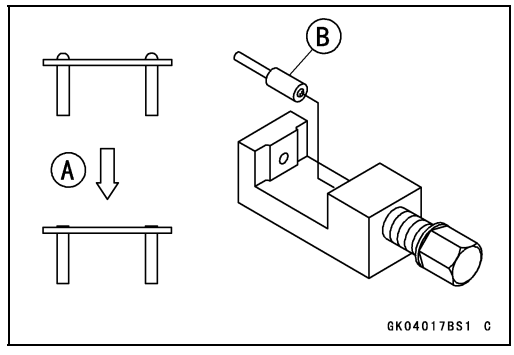

Drive Chain

- Screw the pin holder until it touches the chain pin.
- Be sure that the cutting pin hits center of the chain pin.

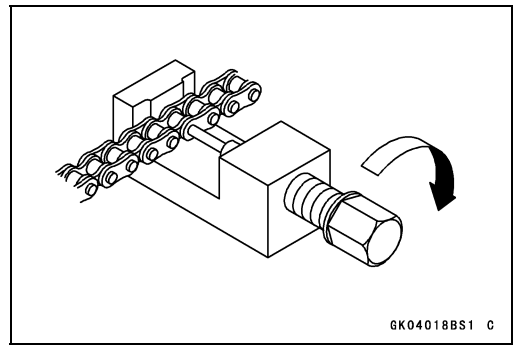

- Screw the handlebar [A] into the body.
- Turn the pin holder with the wrench [B] clockwise to extract the chain pin.
- Remove the drive chain from the motorcycle.

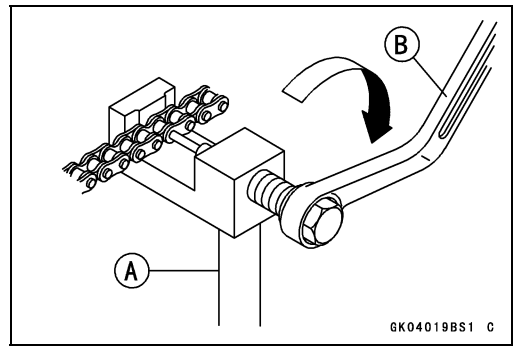

- Apply grease to the new link pins [A] and grease seals [B] [C].
- Engage the new drive chain on the engine and rear sprockets.
- Insert the link pins in the drive chain ends.
- Install the grease seals.
- Install the link plate [D] so that the mark faces out.
- Push the link plate by hand or plier to fix it.
- Be sure to set the grease seals correctly.

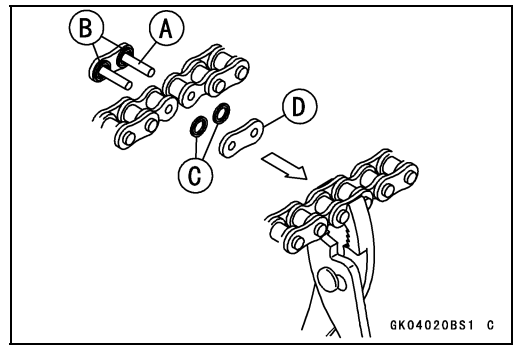

- Set the plate holder (A) [A] and plate holder (B) [B] on the body.

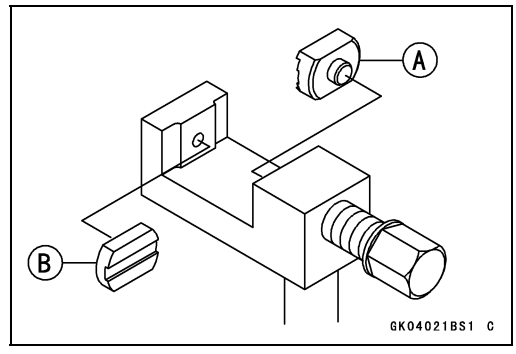

- Fit the plate holder (A) [A] to the link plate.
- Turn the pin holder by hand until the plate holder (B) [B] touches the other link plate.

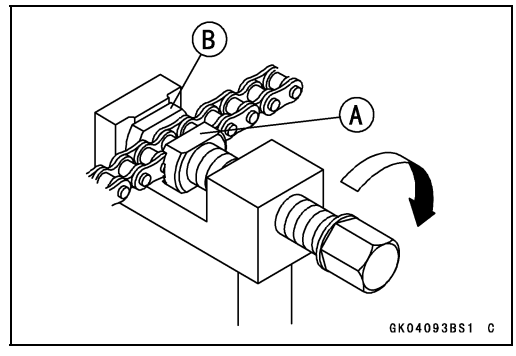

Drive Chain

- Turn the pin holder by a wrench clockwise until two pins of link come into groove of the plate holder (A).
- Take off the plate holder.

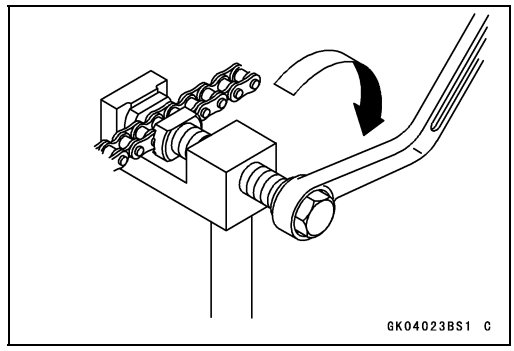

- Set the plate holder (B) [A] and cutting and riveting pin [B] as shown.

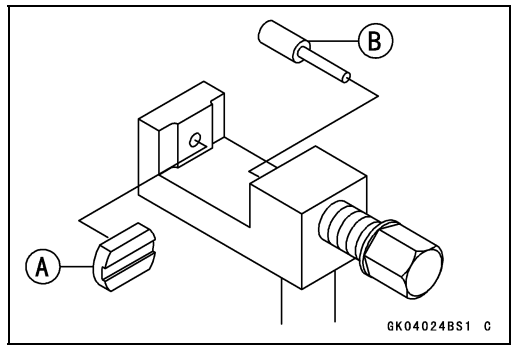

- Turn the pin holder until the riveting pin touches the link pin.

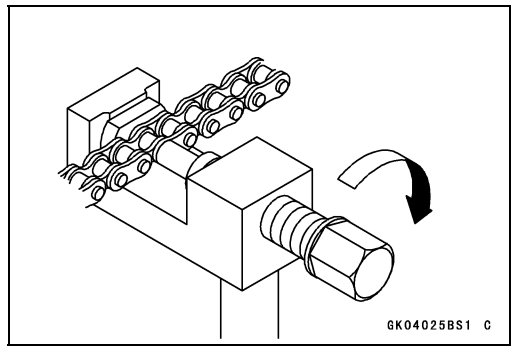

- Turn the wrench clockwise until the tip of riveting pin hits to the link pin.
- Rivet it.
- Same work for the other link pin.

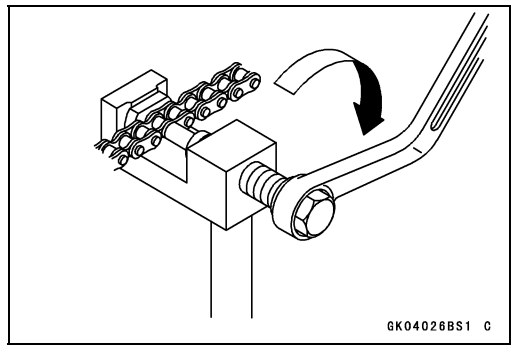

Drive Chain

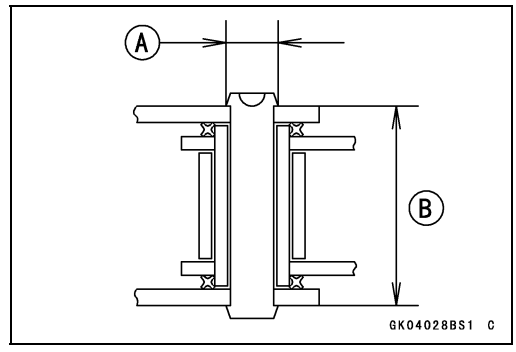

- After staking, check the staked area of the link pin for cracks.
- Measure the outside diameter [A] of the link pin and link plates width [B].

Link Pin Outside Diameter
Standard: 5.9 ~ 6.2 mm (0.23 ~ 0.24 in.)

Link Plates Outside Width
Standard: 20.75 ~ 20.90 mm (0.8169 ~ 0.8228 in.)

★If the reading exceeds the specified length, cut and rejoin the chain again.

- Check:
  Movement of the Rollers
- Adjust the drive chain slack after installing the chain (see Drive Chain Slack Adjustment in the Periodic Maintenance chapter).

Sprocket, Coupling

Engine Sprocket Removal

- Loosen the drive chain (see Drive Chain Slack Adjustment in the Periodic Maintenance chapter).
- Remove:
  Engine Sprocket Cover Bolt [A]
  Quick Rivets [B]
  Engine Sprocket Cover [C]

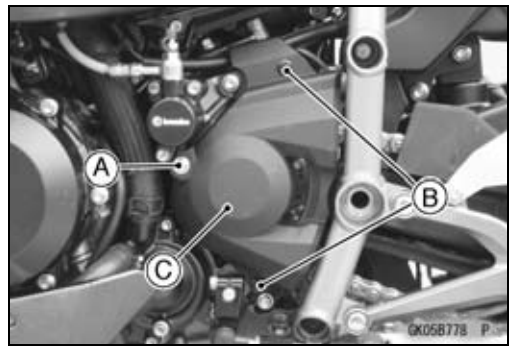

- Remove:
  Left Lower Fairing (see Lower Fairing Removal in the Frame chapter).
- Drain the coolant (see Coolant Change in the Periodic Maintenance chapter).
- Remove the shift lever bolt [A], and take the shift lever [B] off the shift shaft.
- Remove the water pump cover bolts [C] to free the water pump cover [D].

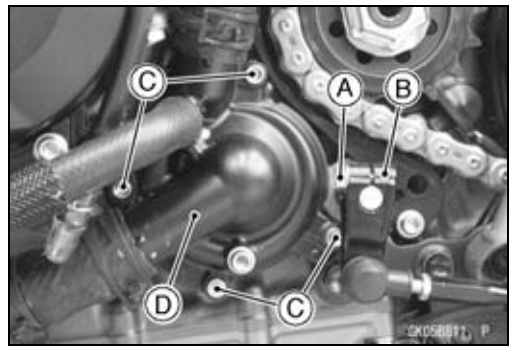

- Remove the clutch slave cylinder mounting bolts [A] to free the clutch slave cylinder [B].
- Remove:
  Chain Guide Bolts (L = 30 mm) [C]
  Clutch Slave Cylinder Holder [D] and Push Rod Cover
  Chain Guide Bolt (L = 14 mm) [E]
  Chain Guide [F]
  Dowel Pins

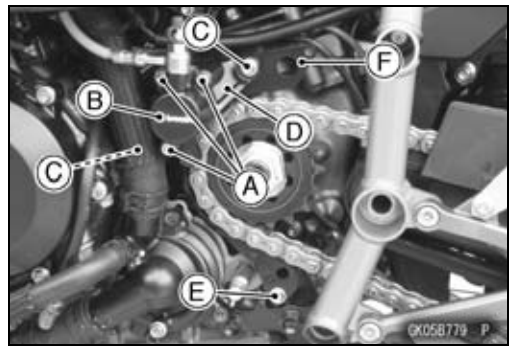

NOTICE

If the clutch slave cylinder is removed and left alone, the piston will be pushed out by spring force and the clutch fluid will drain out.

○Push [A] the piston into the cylinder as far as it will go.

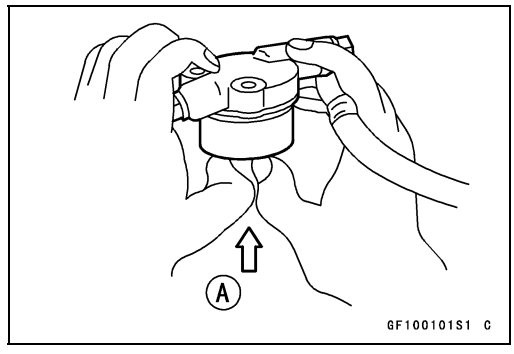

NOTICE

Immediately wash away any clutch fluid that spills. It may damage painted surfaces.

○Apply the clutch lever [A] slowly with the piston pushed and hold it with a band [B].

NOTE

○*Holding the clutch lever keeps the piston from coming out.*

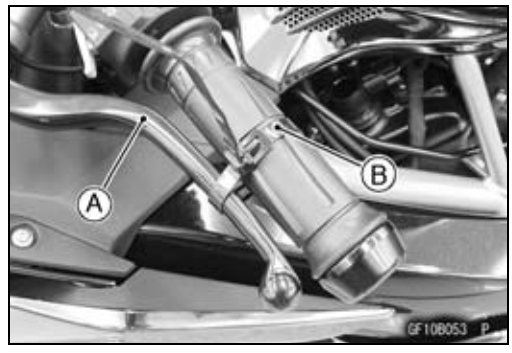

Sprocket, Coupling

- Flatten out the bended washer [A].
- Remove the engine sprocket nut [B] and washer.

NOTE

○*When loosening the engine sprocket nut, hold the rear brake on.*

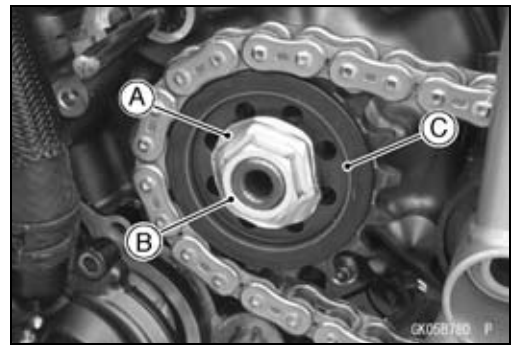

- Pull the engine sprocket [C] and drive chain off the output shaft.
- Disengage the drive chain from the engine sprocket.

Engine Sprocket Installation

- Replace the sprocket washer with a new one.
- Engage the drive chain and engine sprocket.
- Install the engine sprocket to the output shaft.
- Apply molybdenum disulfide oil solution to the threads and the seating surface of the engine sprocket nut.
- Tighten:

Torque - Engine Sprocket Nut [A]: 145 N·m (14.8 kgf·m, 107 ft·lb)

NOTE

○*Tighten the engine sprocket nut while applying the rear brake.*

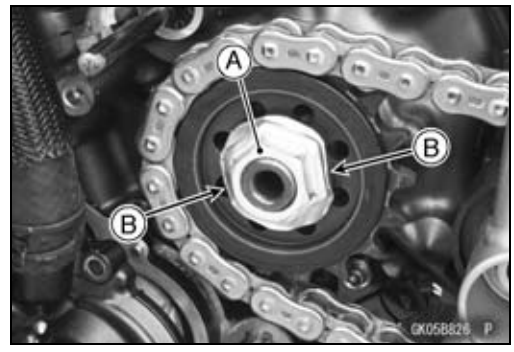

- Bend the two sides [B] on a straight line of the washer.
- Adjust the drive chain slack (see Drive Chain Slack Adjustment in the Periodic Maintenance chapter).
- Stick the damper [A] to the push rod cover [B].

○Face the damper ends toward the flat portion [C] of the push rod cover.

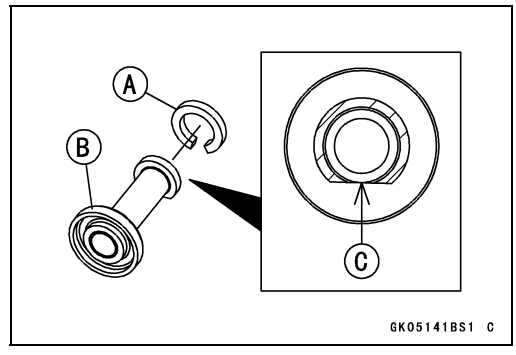

- Install:
  Chain Guide [A]
  Dowel Pins [B]
  Push Rod Cover [C]
  Clutch Slave Cylinder Holder [D]
- Apply a non-permanent locking agent to the threads of chain guide bolt, L = 14 mm (0.6 in.).
- Tighten:

Torque - Drive Chain Guide Bolt (L = 14 mm): 10 N·m (1.0 kgf·m, 89 in·lb)
Drive Chain Guide Bolts (L = 30 mm): 10 N·m (1.0 kgf·m, 89 in·lb)

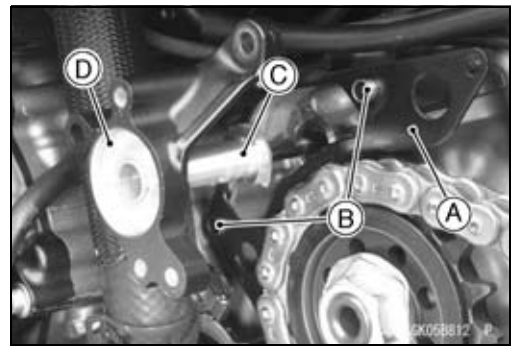

Sprocket, Coupling

- Replace the clutch slave cylinder gasket with a new one.
- Install:
  Clutch Slave Cylinder [A]
- Apply a non-permanent locking agent to the threads of clutch slave cylinder mounting bolts [B].
- Tighten:

Torque - Clutch Slave Cylinder Mounting Bolts: 10 N·m (1.0 kgf·m, 89 in·lb)

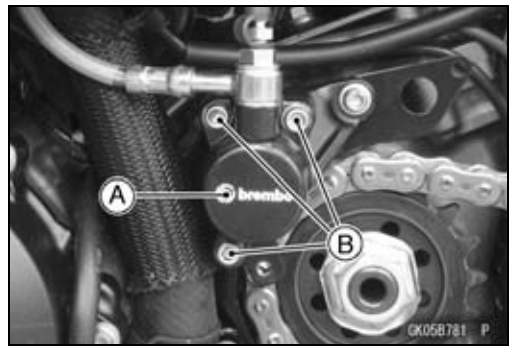

- Install the water pump cover (see Water Pump Installation in the Cooling System chapter).

- Install:
  Collar [A]
  Engine Sprocket Cover [B]
  Quick Rivets [C]
- Apply a non-permanent locking agent to the threads of engine sprocket cover bolt [D].
- Tighten:

Torque - Engine Sprocket Cover Bolt: 10 N·m (1.0 kgf·m, 89 in·lb)

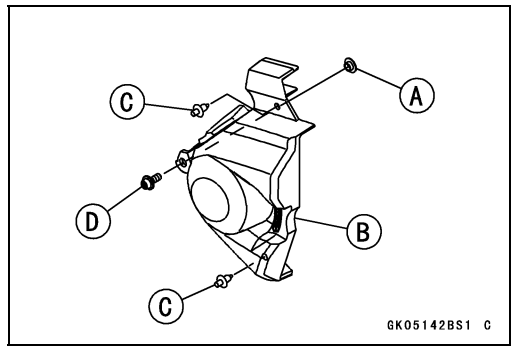

Rear Sprocket Removal

- Remove:
  Coupling (see Coupling Removal)
  Rear Sprocket Bolts and Nuts [A]
  Washers
  Rear Sprocket [B]

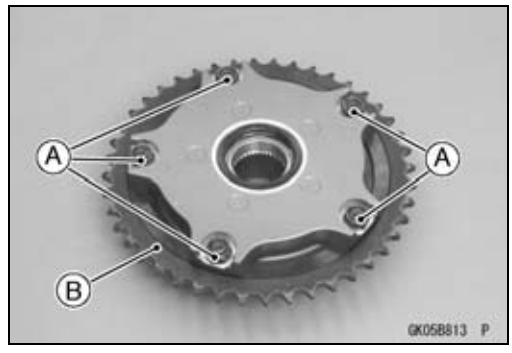

Rear Sprocket Installation

- Replace the rear sprocket nuts [A] with new ones.
- Install:
  Rear Sprocket [B]
  Washers [C]
  Rear Sprocket Bolts [D]

○The tooth number marking [E] faces to the outside of the vehicle.

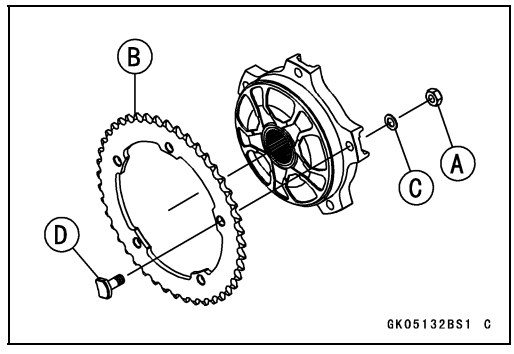

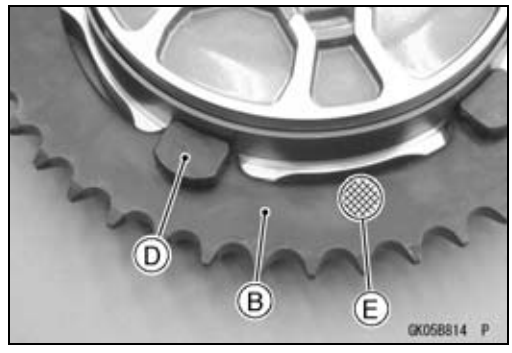

Sprocket, Coupling

- Tighten the rear sprocket nuts to a snug fit following the specified sequence [1 ~ 6].
- Tighten the rear sprocket nuts to the specified torque with the same sequence.

Torque - Rear Sprocket Nuts: 59 N·m (6.0 kgf·m, 44 ft·lb)

- After tightening, check that the bolt ends protrude from the nuts.
- Install the coupling (see Coupling Installation).

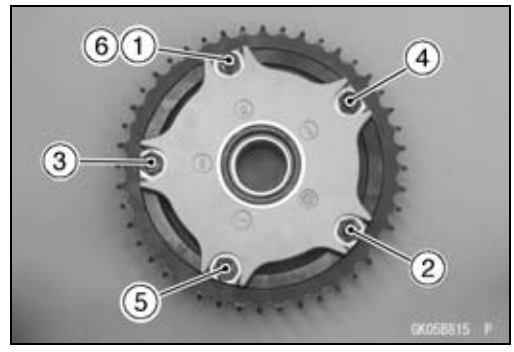

Coupling Removal

- Loosen the drive chain (see Drive Chain Slack Adjustment in the Periodic Maintenance chapter).
- Remove:
  Bolts [A] and Washers
  Guard [B]
  Collar [C]
  Snap Ring [D]
  Rear Axle Nut [E] and Washer

NOTE

○*Use the 46 mm wrench (12 pt.) while holding the right side of the rear axle with the Allen wrench.*

- Disengage the drive chain [F] and remove the coupling [G].

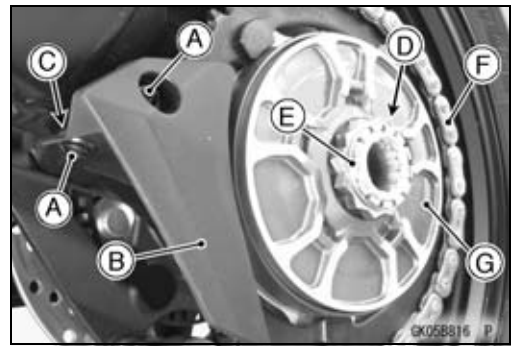

Coupling Installation

- Be sure to install the collar [A].

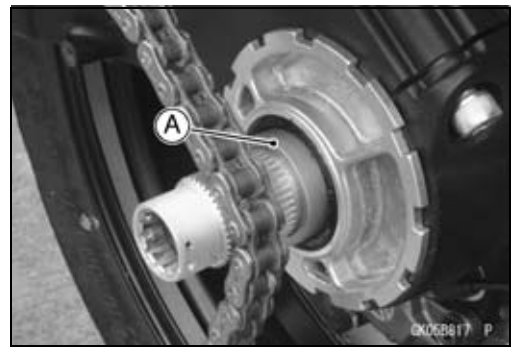

Sprocket, Coupling

● Engage the drive chain and install the coupling [A] to the rear axle [B].
○Align the paint mark [C] with the line [D].
● Install the washer.

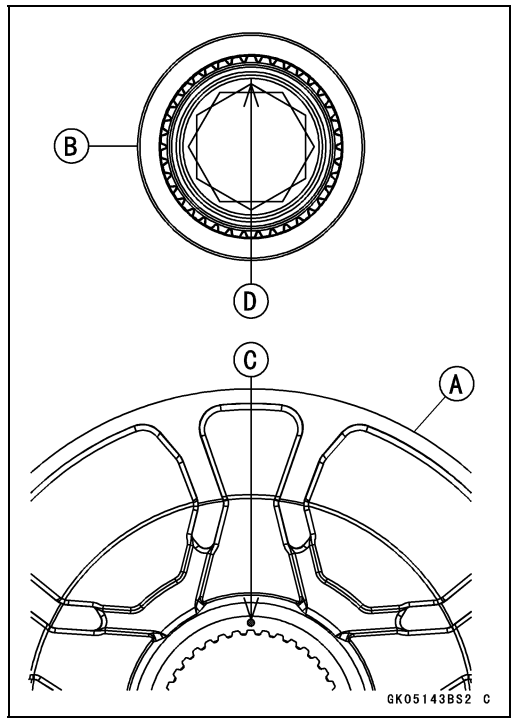

● Tighten:

Torque - Rear Axle Nut [A], First: 220 N·m (22.4 kgf·m, 162 ft·lb)

NOTE

○*Use the 46 mm wrench (12 pt.) while holding the right side of the rear axle with the Allen wrench.*

● Loosen the rear axle nut, and tighten it again.

Torque - Rear Axle Nut, Final: 255 N·m (26.0 kgf·m, 188 ft·lb)

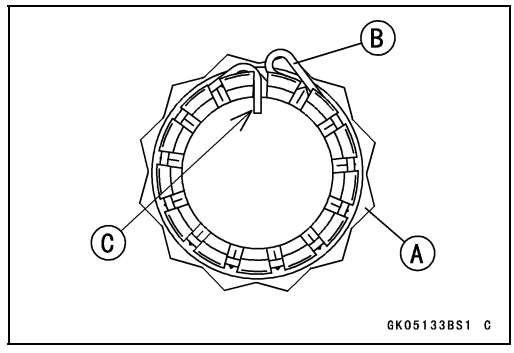

● Replace the snap ring [B] with a new one.
● Insert the snap ring end [C] to the hole of the rear axle as shown.
● Adjust the drive chain slack (see Drive Chain Slack Adjustment in the Periodic Maintenance chapter).
● Install the removed parts (see appropriate chapters).

Coupling Bearing Removal

● Remove:
Coupling (see Coupling Removal)
Rear Sprocket (see Rear Sprocket Removal)
Outer Coupling [A]
Coupling Dampers [B]
O-ring [C]
Inner Coupling [D]
Grease Seal [E]

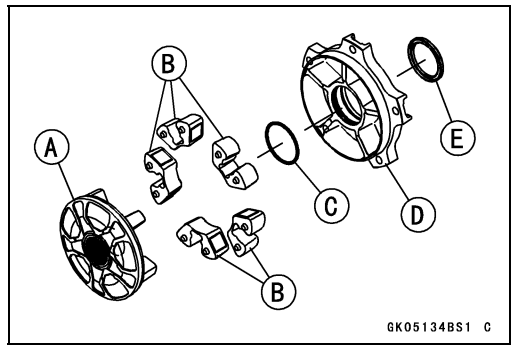

Sprocket, Coupling

- Remove:
  Snap Ring [A]
  Ball Bearing [B]

Special Tools - Inside Circlip Pliers: 57001-143
Bearing Driver Set: 57001-1129

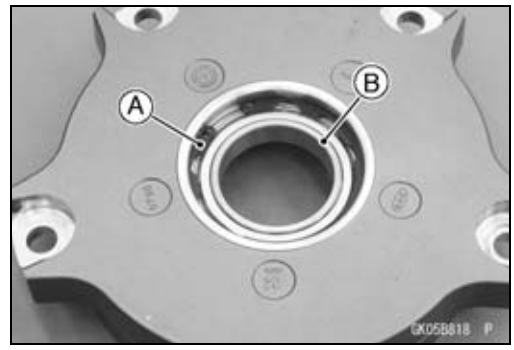

Coupling Bearing Installation

- Replace the O-ring, grease seal, snap ring and ball bearing with new ones.
- Press the ball bearing [A] until it is bottomed.

Special Tool - Bearing Driver Set: 57001-1129

- Install the snap ring [B].

Special Tool - Inside Circlip Pliers: 57001-143

- Press the grease seal [C] so that the seal surface is flush with the end of the hole.

Special Tool - Bearing Driver Set: 57001-1129

- Apply grease to the grease seal lips.

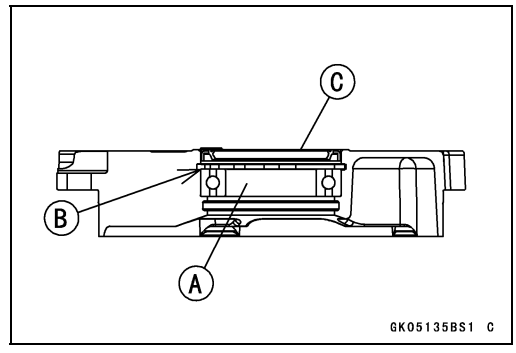

- Apply grease to the O-ring [A] and install it.
- Install the coupling dampers [B] so that its projections facing upward.
- Install the outer coupling to the inner coupling.
- Install the removed parts (see appropriate chapters).

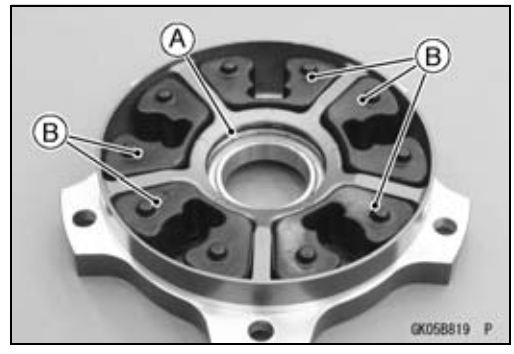

Coupling Bearing Inspection

Since the coupling bearing is made to extremely close tolerances, the clearance can not normally be measured.

NOTE

○*It is not necessary to remove the coupling bearing for inspection. If the bearing is removed, it will need to be replaced with a new one.*

- Turn the bearing in the coupling back and forth [A] while checking for plays, roughness or binding.

★If the bearing play, roughness or binding is found, replace the bearing.

- Examine the bearing seal [B] for tears or leakage.

★If the seal is torn ot is leaking, replace the bearing.

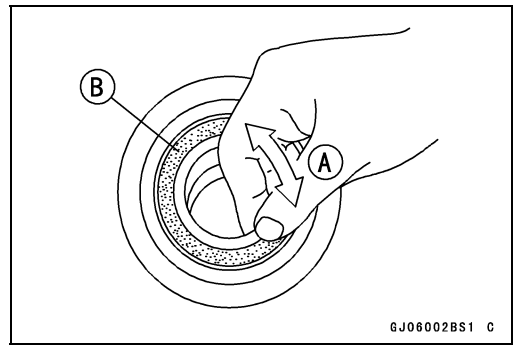

Coupling Bearing Lubrication

NOTE

○*Since the coupling bearing is packed with grease and sealed, lubrication is not required.*

Sprocket, Coupling

Coupling Damper Inspection

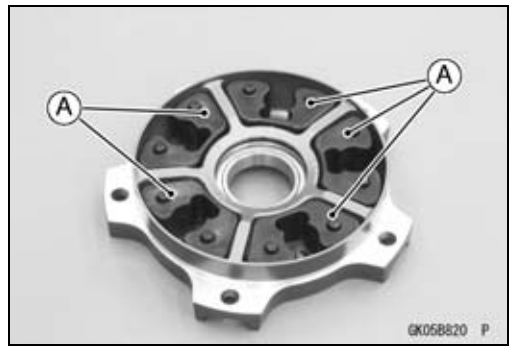

- Remove the outer coupling, and inspect the rubber dampers [A].
- Replace the damper if it appears damaged or deteriorated.

Bearing Housing Removal

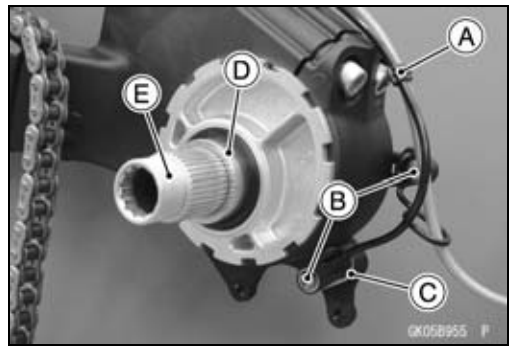

- Remove:
  Coupling (see Coupling Removal)
  Rear Wheel (see Rear Wheel Removal in the Wheels/Tires chapter)
  Rear Brake Disc (see Rear Brake Disc Removal in the Brakes chapter)
  Clamp [A]
  Bolts [B]
  Spacer [C]
  Collar [D]
  Rear Axle [E]

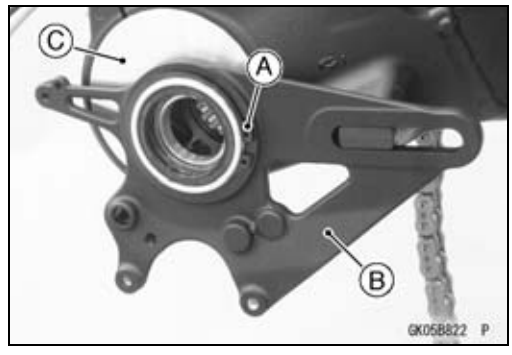

- Remove:
  Circlip [A]
  Rear Caliper Holder [B]
  Bearing Housing [C]

  Special Tool - Outside Circlip Pliers: 57001-144

Bearing Housing Installation

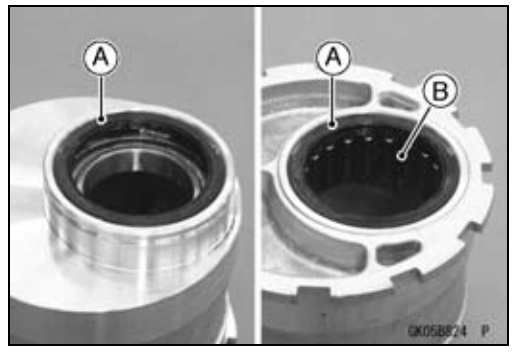

- Apply high-temperature grease to the lips of grease seals [A] and needle bearing [B].

Sprocket, Coupling

- Replace the circlip [A] with a new one.
- Install:
  Bearing Housing [B]
  Rear Caliper Holder [C]
  Circlip
  Rear Axle [D]
  Collar [E]

  Special Tool - Outside Circlip Pliers: 57001-144
- Install the removed parts (see appropriate chapters).

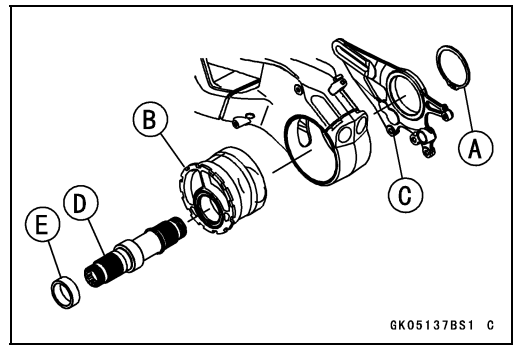

Bearing Housing Bearing Removal

- Remove:
  Bearing Housing (see Bearing Housing Removal)
  Grease Seals [A]

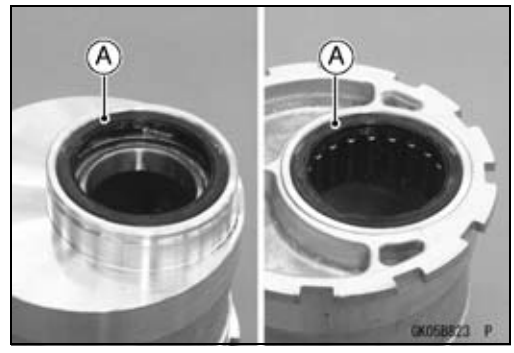

- Remove:
  Circlip [A]

  Special Tool - Inside Circlip Pliers: 57001-143
- Remove the ball bearing [B] and needle bearing [C] using a suitable tool.

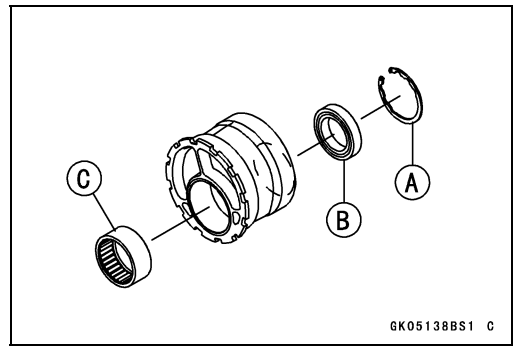

Bearing Housing Bearing Installation

- Replace the needle bearing, ball bearing, circlip and grease seals with new ones.
- Press in the needle bearing [A].
  6.0 ±0.4 mm (0.24 ±0.02 in.) [B]

  Special Tool - Bearing Driver Set: 57001-1129
- Apply high-temperature grease to the needle bearing.
- Press in the ball bearing [C] until it is bottomed.

  Special Tool - Bearing Driver Set: 57001-1129
- Install the circlip [D].

  Special Tool - Inside Circlip Pliers: 57001-143
- Install the grease seals [E] so that their surfaces are flush with the bearing housing [F].
- Apply high-temperature grease to the grease seal lips.

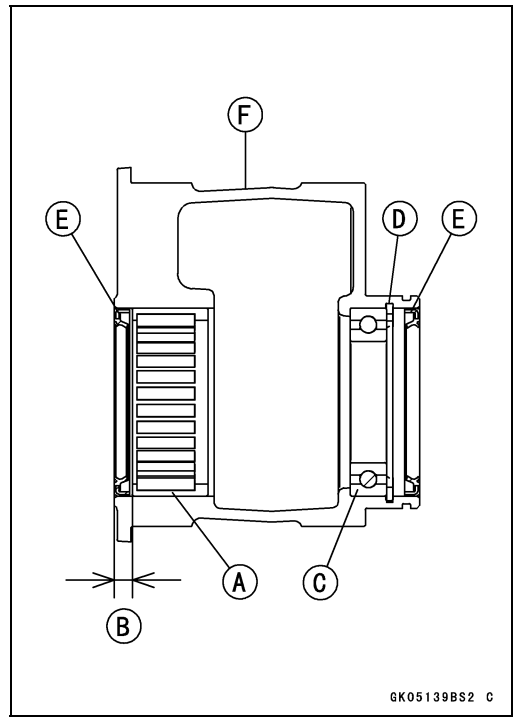

Sprocket, Coupling

Bearing Housing Bearing Inspection

NOTICE
Do not remove the bearings for inspection. Removal may damage them.

- Inspect the ball bearing [A] and needle bearing [B] installed in the bearing housing.

○The rollers and balls in a bearing normally wear very little, and wear is difficult to measure. Instead of measuring, visually inspect the bearing for abrasion, discoloration, or other damage.

★If the needle bearing and rear axle [C] show any signs of abnormal wear, discoloration, or damage, replace them as a set.

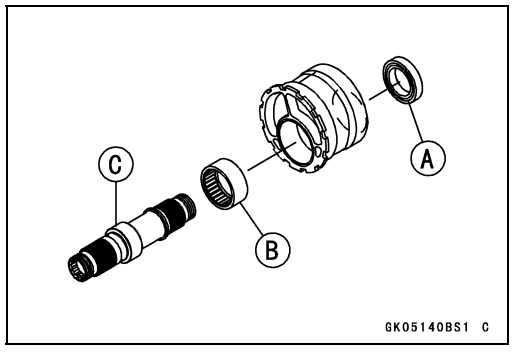

- Turn the ball bearing in the bearing housing back and forth [A] while checking for plays, roughness, or binding.

★If bearing play, roughness or binding is found, replace the bearing.

- Examine the bearing seal [B] for tears or leakage.

★If the seal is torn or is leaking, replace the bearing.

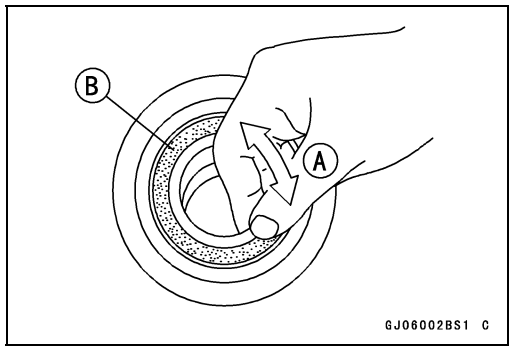

Sprocket Wear Inspection

- Visually inspect the engine and rear sprocket teeth for wear and damage.

★If the teeth are worn as illustrated, replace the sprocket, and inspect the drive chain wear (see Drive Chain Wear Inspection in the Periodic Maintenance chapter).

Worn Tooth (Engine Sprocket) [A]
Worn Tooth (Rear Sprocket) [B]
Direction of Rotation [C]

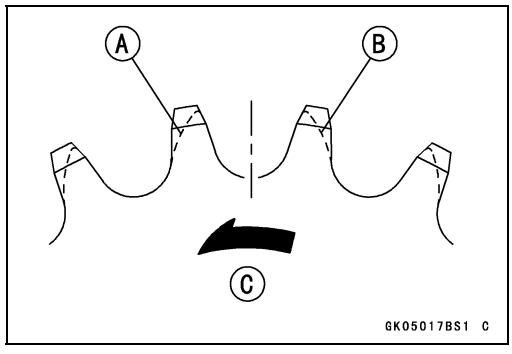

NOTE

○*If a sprocket requires replacement, the chain is probably worn also. When replacing a sprocket, inspect the chain.*

Rear Sprocket Warp Inspection

- Raise the rear wheel off the ground with the stand so that it will turn freely.
- Set a dial gauge [A] against the rear sprocket [B] near the teeth as shown, and rotate [C] the rear wheel to measure the sprocket runout (warp). The difference between the highest and lowest dial gauge readings is the amount of runout (warp).

★If the runout exceeds the service limit, replace the rear sprocket.

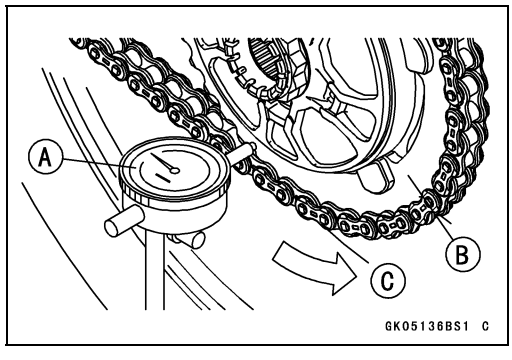

Rear Sprocket Warp

Standard: TIR 0.4 mm (0.016 in.) or less

Service Limit: TIR 0.5 mm (0.020 in.)

Brakes

Table of Contents

Exploded View 12-3
Specifications 12-8
Brake Lever, Brake Pedal 12-9
  Brake Lever Removal 12-9
  Brake Lever Installation 12-9
  Brake Lever Position Adjustment 12-9
  Brake Pedal Position Inspection 12-9
  Brake Pedal Position Adjustment 12-9
  Brake Pedal Removal 12-10
  Brake Pedal Installation 12-10
Calipers 12-11
  Front Caliper Removal 12-11
  Front Caliper Installation 12-11
  Rear Caliper Removal 12-12
  Rear Caliper Installation 12-13
Brake Pads 12-14
  Front Caliper Disassembly 12-14
  Front Caliper Assembly 12-14
  Caliper Fluid Seal Damage Inspection 12-14
  Caliper Piston and Cylinder Damage Inspection 12-14
  Front Brake Pad Removal 12-14
  Front Brake Pad Installation 12-15
  Rear Brake Pad Removal 12-15
  Rear Brake Pad Installation 12-15
  Brake Pad Wear Inspection 12-16
Master Cylinder 12-17
  Front Master Cylinder Removal 12-17
  Front Master Cylinder Installation 12-18
  Rear Master Cylinder Removal 12-18
  Rear Master Cylinder Installation 12-19
Brake Disc 12-20
  Front Brake Disc Removal 12-20
  Front Brake Disc Installation 12-20
  Rear Brake Disc Removal 12-20
  Rear Brake Disc Installation 12-21
  Brake Disc Wear Inspection 12-22
  Brake Disc Warp Inspection 12-22
Brake Fluid 12-23
  Brake Fluid Level Inspection 12-23
  Brake Fluid Change 12-23
  Brake Line Bleeding 12-23
Brake Hose 12-28
  Brake Hose Removal/Installation 12-28
  Brake Hose and Pipe Inspection 12-28
Anti-Lock Brake System 12-29
  Parts Location 12-29
  ABS Servicing Precautions 12-33
  ABS Troubleshooting Outline 12-35
  Inquiries to Rider 12-38
  Self-diagnosis Outline 12-42

ABS and KIBS Indicator Lights (LED) Inspection 12-43
ABS Hydraulic Unit Removal 12-43
ABS Hydraulic Unit Installation 12-44
ABS Hydraulic Unit Inspection 12-45
Front Wheel Rotation Sensor Removal 12-45
Front Wheel Rotation Sensor Installation 12-46
Rear Wheel Rotation Sensor Removal 12-46
Rear Wheel Rotation Sensor Installation 12-47
Wheel Rotation Sensor Inspection 12-48
Wheel Rotation Sensor Air Gap Inspection 12-48
Wheel Rotation Sensor Rotor Inspection 12-49
ABS Solenoid Valve Relay Fuse (15 A) Removal 12-49
ABS Motor Relay Fuse (25 A) Removal 12-49
Fuse Installation 12-49
Fuse Inspection 12-49

Exploded View

This page intentionally left blank.

Exploded View

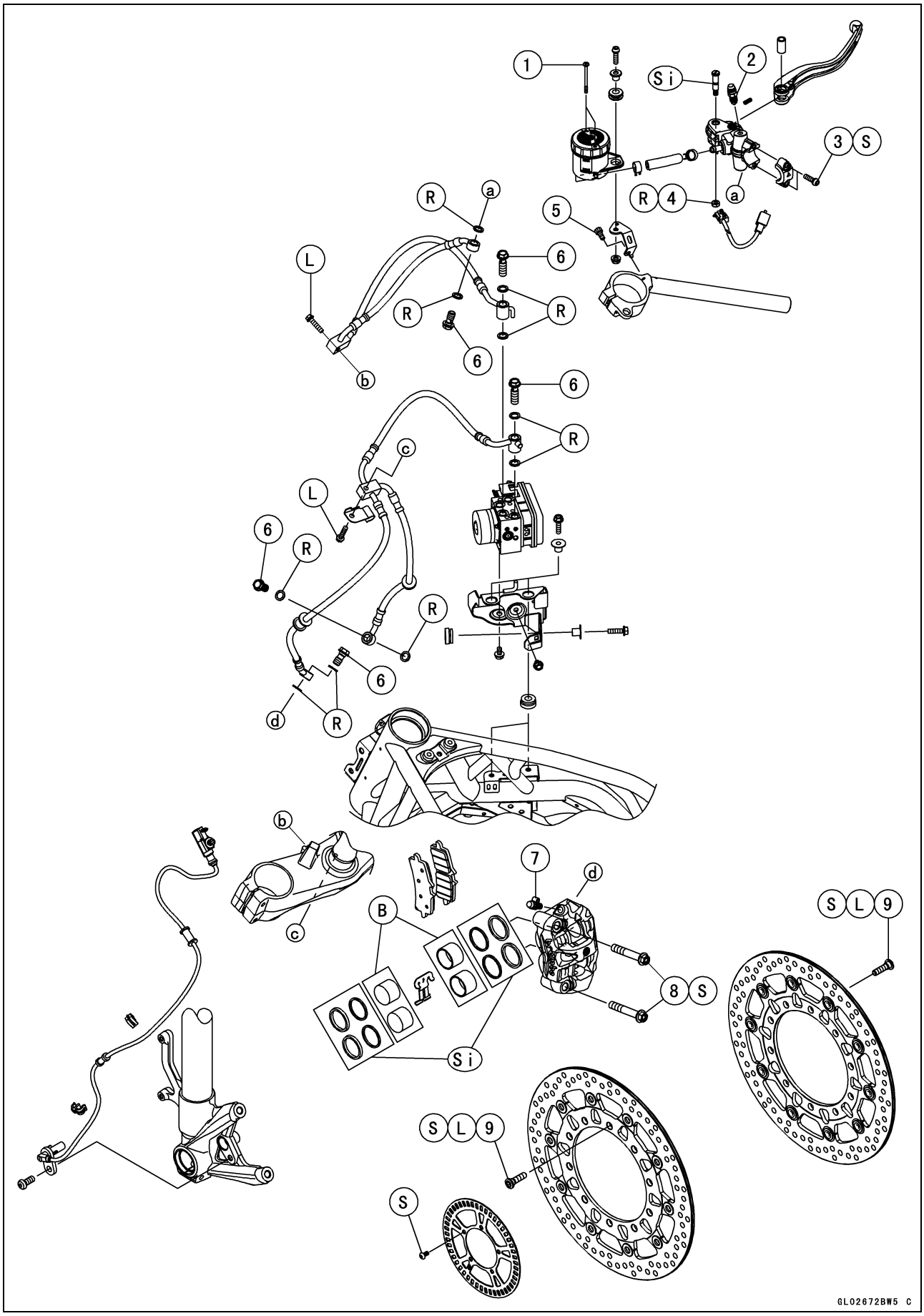

Exploded View

No.	Fastener	Torque			Remarks
		N·m	kgf·m	ft·lb	
1	Front Brake Fluid Reservoir Cap Screws	0.70	0.07	6.2 in·lb	
2	Front Master Cylinder Bleed Valve	5.5	0.56	49 in·lb	
3	Front Master Cylinder Clamp Bolts	11	1.1	97 in·lb	S
4	Brake Lever Pivot Bolt Locknut	6.0	0.61	53 in·lb	R
5	Front Brake Fluid Reservoir Bracket Bolt	8.8	0.90	78 in·lb	
6	Brake Hose Banjo Bolts	25	2.5	18	
7	Front Caliper Bleed Valves	16	1.6	12	
8	Front Caliper Mounting Bolts	34	3.5	25	S
9	Front Brake Disc Mounting Bolts	27	2.8	20	L, S

B: Apply brake fluid.
L: Apply a non-permanent locking agent.
R: Replacement Parts
S: Follow the specified tightening sequence.
Si: Apply silicone grease.

NOTE

○*When disassembling the brake hose and pipe, disassemble them by the unit as shown in the exploded view.*

Exploded View

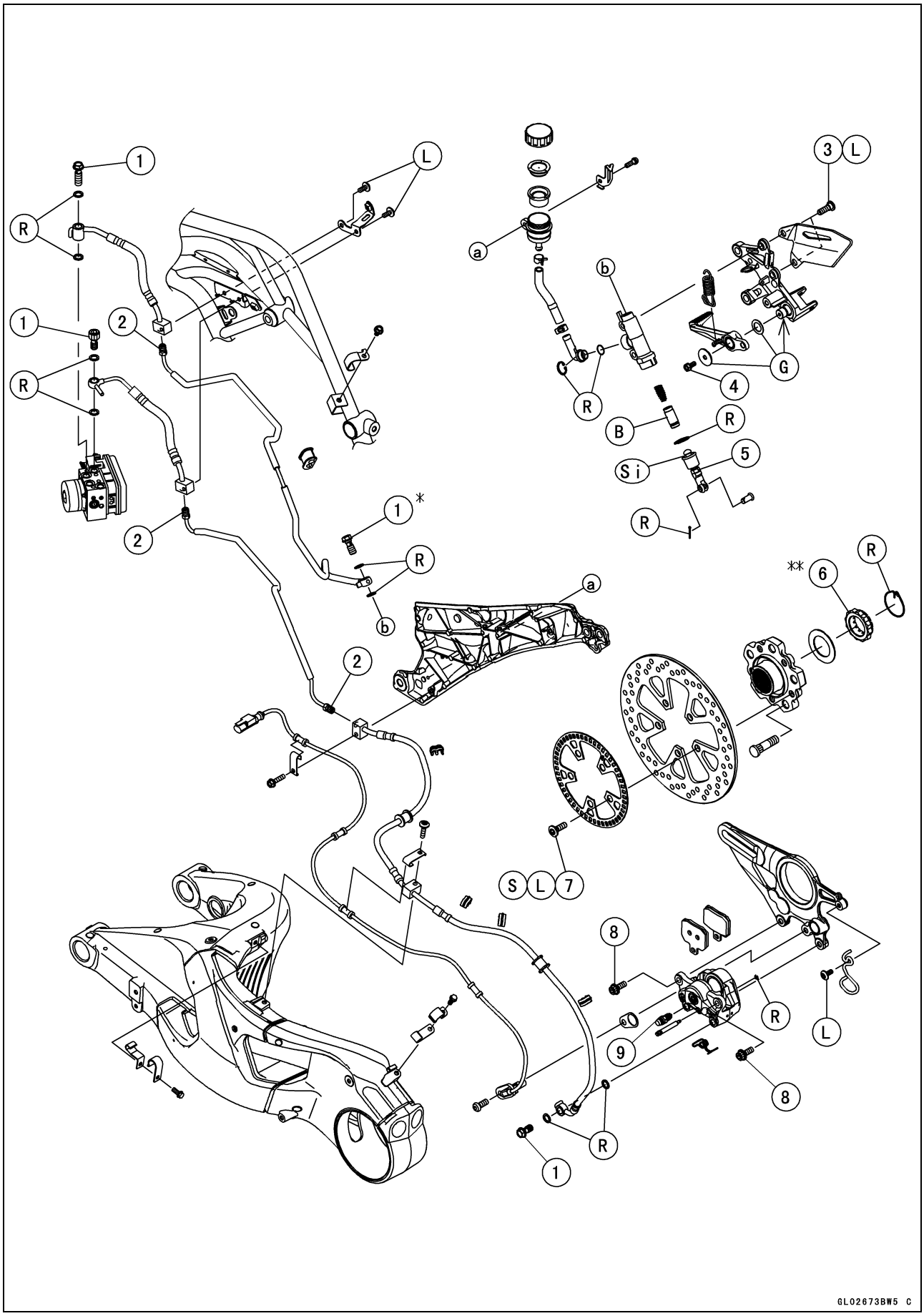

Exploded View

No.	Fastener	Torque			Remarks
		N·m	kgf·m	ft·lb	
1	Brake Hose Banjo Bolts	25	2.5	18	
2	Brake Pipe Joint Nuts	18	1.8	13	
3	Rear Master Cylinder Mounting Bolts	25	2.5	18	L
4	Brake Pedal Bolt	8.8	0.90	78 in·lb	
5	Rear Master Cylinder Push Rod Locknut	17	1.7	13	
6**	Rear Axle Nut, First	220	22.4	162	
	Rear Axle Nut, Final	255	26.0	188	
7	Rear Brake Disc Mounting Bolts	27	2.8	20	L, S
8	Rear Caliper Mounting Bolts	27	2.8	20	
9	Rear Caliper Bleed Valve	16	1.6	12	

B: Apply brake fluid.
G: Apply grease.
L: Apply a non-permanent locking agent.
R: Replacement Parts
S: Follow the specified tightening sequence.
Si: Apply silicone grease.
*: The thread pitch of the banjo bolt for rear master cylinder differs from the other banjo bolts. Check the thread pitch before installing.
**: After tightening to the first torque, loosen it and tighten to the final torque.

NOTE

○*When disassembling the brake hose and pipe, disassemble them by the unit as shown in the exploded view.*

Specifications

Item	Standard	Service Limit
Brake Lever, Brake Pedal		
Brake Lever Position	Adjustable type (to suit rider)	– – –
Brake Lever Free Play	Non-adjustable	– – –
Brake Pedal Free Play	Non-adjustable	– – –
Brake Pedal Position	About 68 mm (2.68 in.) below top of footpeg	– – –
Brake Pads		
Lining Thickness:		
Front	3.7 mm (0.15 in.)	1 mm (0.04 in.)
Rear	6.95 mm (0.27 in.) (Thickness of pad lining and back plate)	4.5 mm (0.18 in.) (Thickness of pad lining and back plate)
Brake Discs		
Thickness:		
Front	5.3 ~ 5.7 mm (0.21 ~ 0.22 in.)	5.0 mm (0.20 in.)
Rear	4.8 ~ 5.2 mm (0.19 ~ 0.20 in.)	4.5 mm (0.18 in.)
Runout	TIR 0.15 mm (0.0059 in.) or less	TIR 0.3 mm (0.013 in.)
Brake Fluid		
Grade	DOT4	– – –
ABS		
ABS Hydraulic Unit:		
Make	BOSCH	– – –
Wheel Rotation Sensor Air Gap	0.4 ~ 1.6 mm (0.02 ~ 0.06 in.)	– – –

Brake Lever, Brake Pedal

Brake Lever Removal

- Remove the brake lever in the same way as clutch lever removal (see Clutch Lever Removal/Installation in the Clutch chapter).

Brake Lever Installation

- Install the brake lever in the same way as clutch lever installation (see Clutch Lever Removal/Installation in the Clutch chapter).

Brake Lever Position Adjustment

The brake lever position can be adjusted to suit the operator's hand.

- Push the brake lever [A] forward and turn the adjuster [B] and choose a suitable brake lever position.

Adjuster	Turn in	← →	Turn out
Lever Position	Far	← →	Near

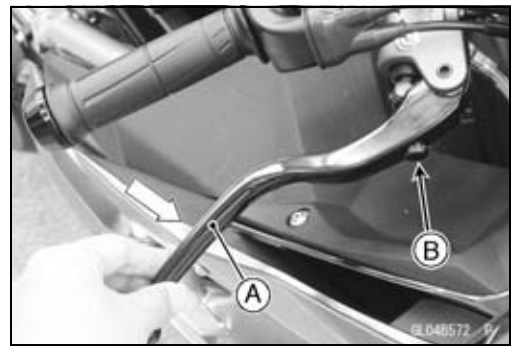

Brake Pedal Position Inspection

- Check that the brake pedal [A] is in the correct position.
  Footpeg [B]

Brake Pedal Position
Standard: About 68 mm (2.68 in.) [C] below top of footpeg

★If it is incorrect, adjust the brake pedal position.

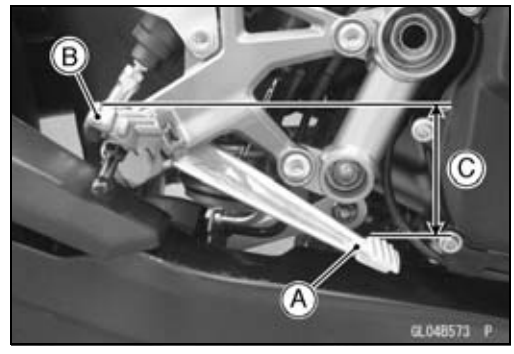

Brake Pedal Position Adjustment

NOTE

○*Usually it is not necessary to adjust the pedal position, but always adjust it when the push rod locknut has been loosened.*

- Loosen the locknut [A] and turn the push rod with the hex head [B] to achieve the correct pedal position.

★If the length [C] shown is **68 ±1 mm (2.68 ±0.04 in.)**, the pedal position will be within the standard range.

- Tighten:

Torque - Rear Master Cylinder Push Rod Locknut: 17 N·m (1.7 kgf·m, 13 ft·lb)

- Check the brake light switch operation (see Brake Light Switch Operation Inspection in the Periodic Maintenance chapter).

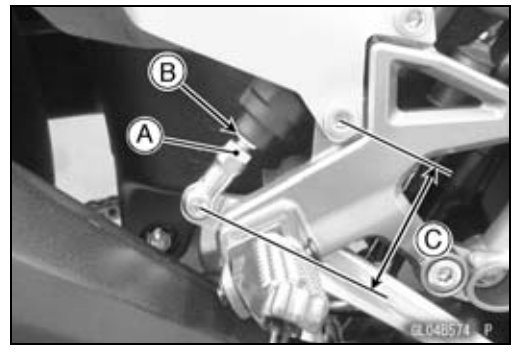

Brake Lever, Brake Pedal

Brake Pedal Removal

- Remove:
  Bolt [A] and Stopper
  Right Footpeg Bracket Bolts [B]

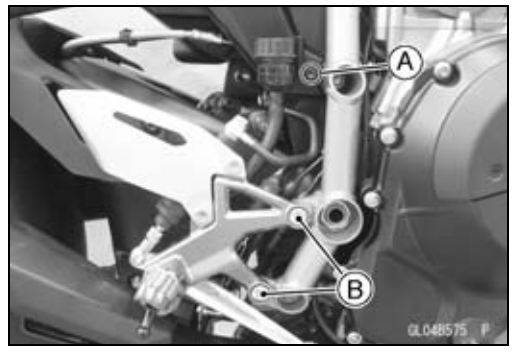

- Remove:
  Cotter Pin [A]
  Joint Pin [B]
  Rear Brake Light Switch Spring [C]
  Return Spring [D]
  Brake Pedal Bolt [E] and Washer [F]
  Brake Pedal

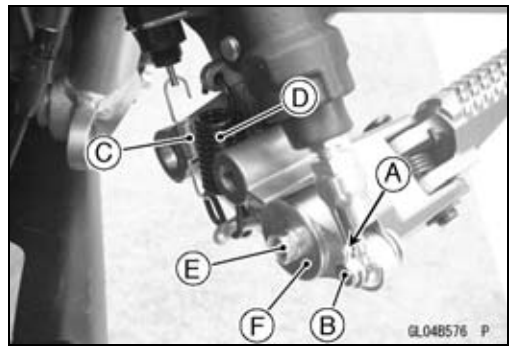

Brake Pedal Installation

- Apply grease to the footpeg pivot shaft [A] and brake pedal side [B] of washers.
- Install:
  Washer [C]
  Brake Pedal [D]
  Washer [E]
- Tighten:

  Torque - Brake Pedal Bolt [F]: 8.8 N·m (0.90 kgf·m, 78 in·lb)

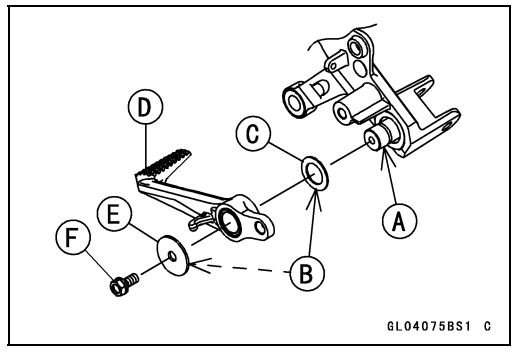

- Hook the rear brake light switch spring [A] on the brake light switch and return spring [B].

○Face the spring ends to the outside of the vehicle.

- Hook the return spring.

○Face the spring ends forward.
○Hook the shorter end to the footpeg bracket.
○Hook the longer end to the brake pedal.

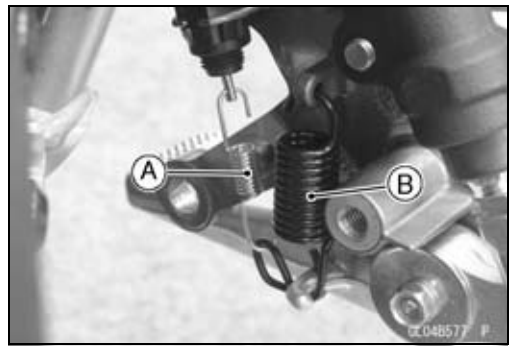

- Replace the cotter pin [A] with a new one.
- Insert the cotter pin and bend the pin ends [B].
- Install the footpeg bracket.
- Apply a non-permanent locking agent to the threads of the footpeg bracket bolts.
- Tighten:

  Torque - Footpeg Bracket Bolts: 25 N·m (2.5 kgf·m, 18 ft·lb)

- Check the brake pedal position (see Brake Pedal Position Inspection).

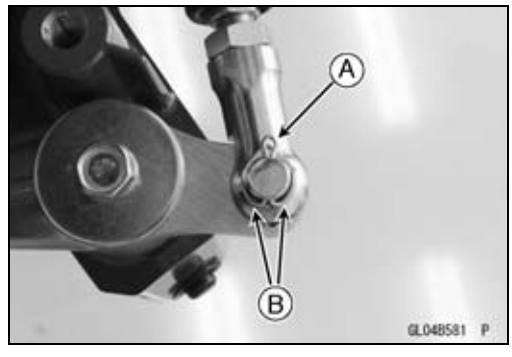

Calipers

Front Caliper Removal

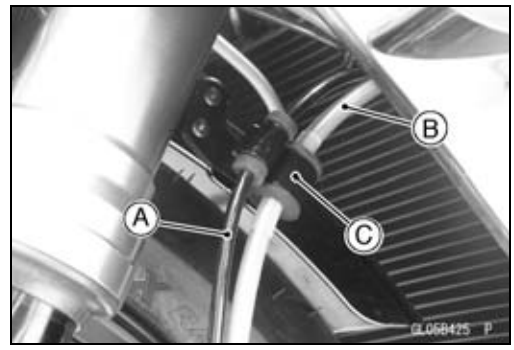

- Free the front wheel rotation sensor lead [A] and front brake hose [B] from the clamp [C].

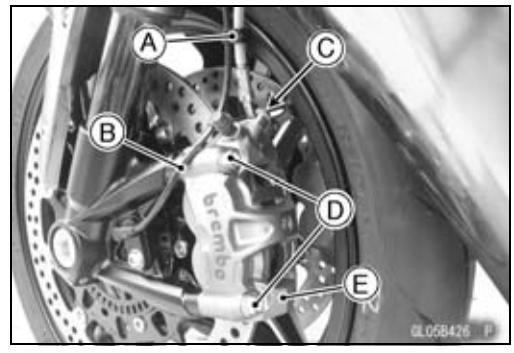

- Remove the clamp [A] to free the front wheel rotation sensor lead [B].
- Loosen the banjo bolt [C] and tighten it loosely to prevent the fluid spillage.
- Remove the caliper mounting bolts [D], and detach the caliper [E] from the disc.
- Remove the banjo bolt and disconnect the brake hose from the caliper.

NOTICE
Brake fluid quickly damages painted plastic surfaces; any spilled fluid should be completely washed away immediately.

○Take care not to spill the brake fluid on the painted or plastic parts.
○Temporarily secure the end of the brake hose to some high place to keep fluid loss to a minimum.
○Immediately wash away any brake fluid that spills.

Front Caliper Installation

- Replace the washers that are on each side of the hose fitting with new ones.
- Install the front caliper mounting bolts so that the seating surface of the bolt do not contact the caliper.
- Run the brake hoses and front wheel rotation sensor lead correctly (see Cable, Wire, and Hose Routing section in the Appendix chapter).

○Avoid sharp bending, kinking, flatting or twisting.

- Tighten:

Torque - Brake Hose Banjo Bolts: 25 N·m (2.5 kgf·m, 18 ft·lb)

- Check the fluid level in the brake fluid reservoir.
- Bleed the brake line (see Brake Line Bleeding).
- Check the brake for good braking power, no brake drag, and no fluid leakage.

⚠ WARNING
After servicing, it takes several applications of the brake lever before the brake pads contact the disc, which could result in increased stopping distance and cause an accident resulting in injury or death. Do not attempt to ride the motorcycle until a firm brake lever is obtained by pumping the lever until the pads are against the disc.

Calipers

- Squeeze the brake lever slowly and hold it with a band [A].

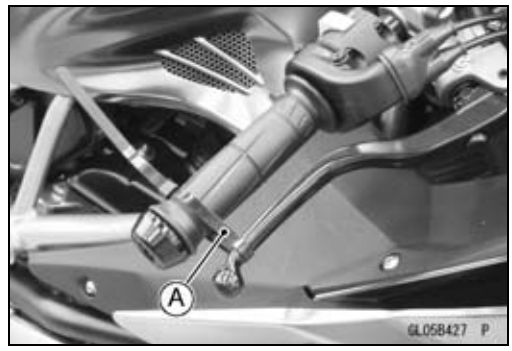

- Tighten the front caliper mounting bolt [A] [B] following specified tightening sequence.
  Tightening Sequence:
  [A → B → A]

  Torque - Front Caliper Mounting Bolts: 34 N·m (3.5 kgf·m, 25 ft·lb)
- Release the brake lever.
- Tighten the front caliper mounting bolts with the above torque and following specified tightening sequence.
  Tightening Sequence:
  [A → B]

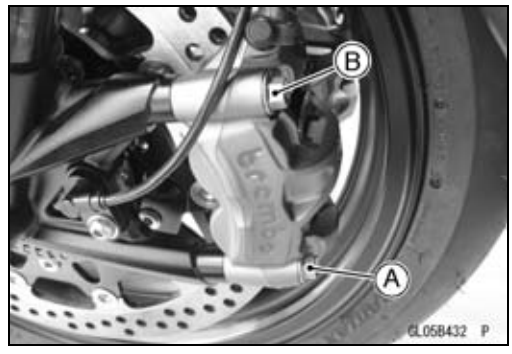

- Check the clearance [A] 0.5 mm (0.020 in.) or more between the caliper and disc at the lower position.

★If there is no clearance, reinstall the caliper.

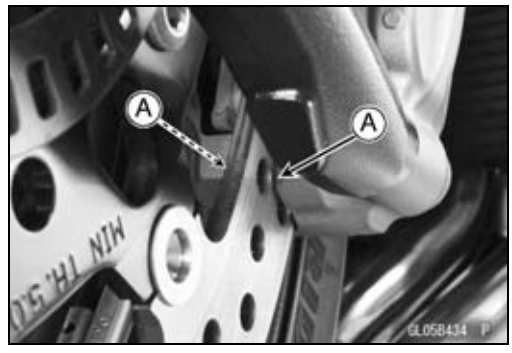

Rear Caliper Removal

- Remove the clamp bolt [A] and clamp [B] to free the rear brake hose.

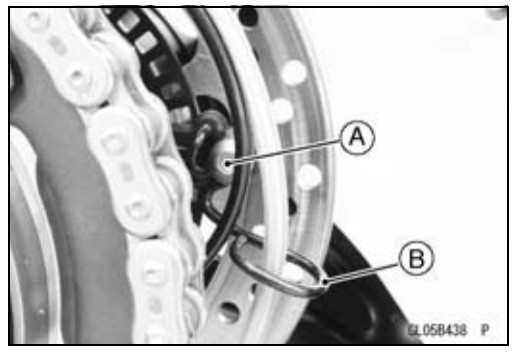

Calipers

- Loosen the banjo bolt [A] and tighten it loosely to prevent the fluid spillage.
- Remove the caliper mounting bolts [B], and detach the caliper [C] from the disc.
- Remove the banjo bolt and disconnect the brake hose from the caliper.

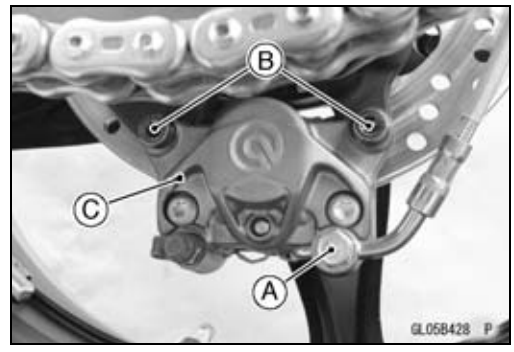

NOTICE
Brake fluid quickly damages painted plastic surfaces; any spilled fluid should be completely washed away immediately.

○Take care not to spill the brake fluid on the painted or plastic parts.
○Temporarily secure the end of the brake hose to some high place to keep fluid loss to a minimum.
○Immediately wash away any brake fluid that spills.

Rear Caliper Installation

- Replace the washers that are on each side of the hose fitting with new ones.
- Install the caliper temporarily.
- Install the brake hose.

○Avoid sharp bending, kinking, flatting or twisting.
○Touch the stopper [A] of the hose fitting to the caliper.

- Tighten:

Torque - Brake Hose Banjo Bolt: 25 N·m (2.5 kgf·m, 18 ft·lb)



- Remove the caliper.
- Check the fluid level in the brake fluid reservoir.
- Bleed the brake line (see Brake Line Bleeding).
- Check the brake for good braking power, no brake drag, and no fluid leakage.

⚠ WARNING
After servicing, it takes several applications of the brake pedal before the brake pads contact the disc, which could result in increased stopping distance and cause an accident resulting in injury or death. Do not attempt to ride the motorcycle until a firm brake pedal is obtained by pumping the pedal until the pads are against the disc.

- Install the caliper.
- Run the brake hose and rear wheel rotation sensor lead correctly (see Cable, Wire, and Hose Routing section in the Appendix chapter).
- Tighten:

Torque - Rear Caliper Mounting Bolts: 27 N·m (2.8 kgf·m, 20 ft·lb)

- Install the clamp.
- Apply a non-permanent locking agent to the threads of the clamp bolt, and tighten it securely.

Brake Pads

Front Caliper Disassembly

● Refer to the Caliper Rubber Parts Replacement in the Periodic Maintenance chapter.

Front Caliper Assembly

● Refer to the Caliper Rubber Parts Replacement in the Periodic Maintenance chapter.

Caliper Fluid Seal Damage Inspection

The fluid seals (piston seals) [A] are placed around the piston to maintain clearance between the pad and the disc. If the seal is in a poor condition, it could lead the pad to wear excessively or the brake to drag, which may cause the temperature of the discs or the brake fluid to increase.

● Replace the fluid seal if it exhibits any of the conditions listed below.

○Brake fluid leakage around the pad.

○Brakes overheat.

○Considerable difference in inner and outer pad wear.

○Seal and piston are stuck together.

★If the fluid seals are replaced, replace the dust seals [B] as well. Also, replace all seals every other time the pads are changed.

Front Caliper [C]

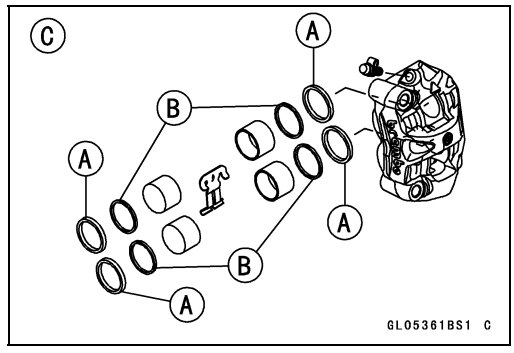

Caliper Piston and Cylinder Damage Inspection

● Visually inspect the pistons [A] and cylinder surfaces [B].

★Replace the caliper if the cylinder and piston are badly scores or rusty.

Front Caliper [C]

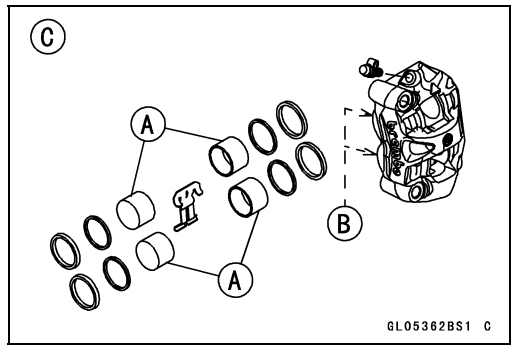

Front Brake Pad Removal

● Remove the front caliper with the hose installed (see Front Caliper Removal).

● Remove:

Brake Pads [A]

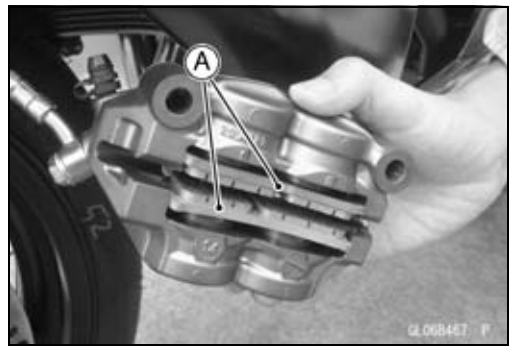

Brake Pads

Front Brake Pad Installation

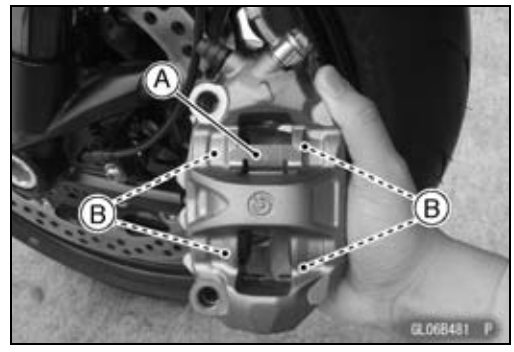

- Install the pad spring [A] on the caliper as shown.
- Push the caliper pistons [B] in by hand as far as they will go.
- Install the brake pads on the pad spring correctly.
- Install the front caliper (see Front Caliper Installation).

⚠ WARNING

After servicing, it takes several applications of the brake lever before the brake pads contact the disc, which could result in increased stopping distance and cause an accident resulting in injury or death. Do not attempt to ride the motorcycle until a firm brake lever is obtained by pumping the lever until the pads are against the disc.

Rear Brake Pad Removal

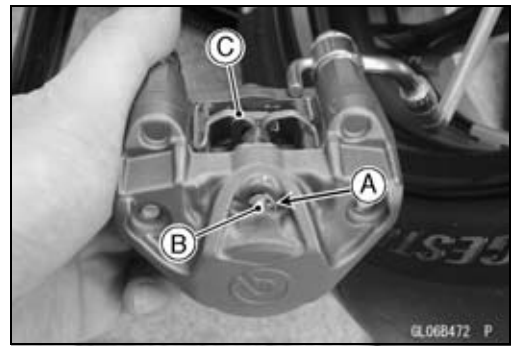

- Remove the rear caliper with the hose installed (see Rear Caliper Removal).
- Remove:
  Clip [A]
  Pad Pin [B]
  Pad Spring [C]
  Brake Pads

Rear Brake Pad Installation

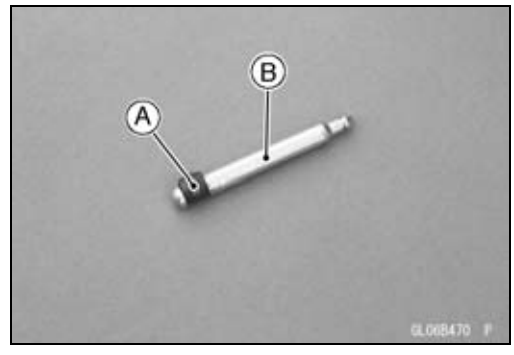

- Push the caliper pistons in by hand as far as it will go.
- Replace the clip with a new one.
- Check that the ring [A] is in place on the pad pin [B].

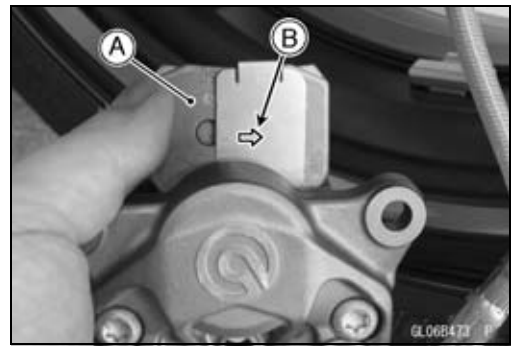

- Install the brake pads [A] so that the arrow mark [B] faces the wheel rotation direction.

Brake Pads

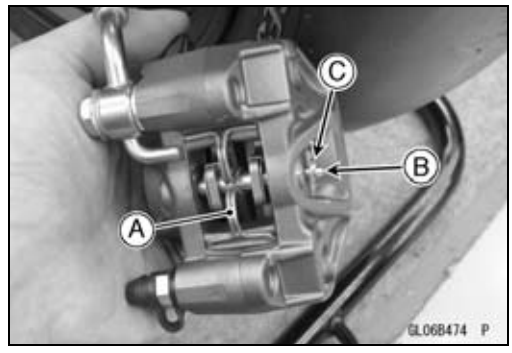

- Install:
  Pad Spring [A]

○The pad spring can install in both directions.

- While pushing down the pad spring, insert the pad pin [B].
- Install the clip [C] onto the pad pin groove.
- Install the rear caliper (see Rear Caliper Installation).

⚠ WARNING

After servicing, it takes several applications of the brake pedal before the brake pads contact the disc, which could result in increased stopping distance and cause an accident resulting in injury or death. Do not attempt to ride the motorcycle until a firm brake pedal is obtained by pumping the pedal until the pads are against the disc.

Brake Pad Wear Inspection

- Refer to the Brake Pad Wear Inspection in the Periodic Maintenance chapter.

Master Cylinder

Front Master Cylinder Removal

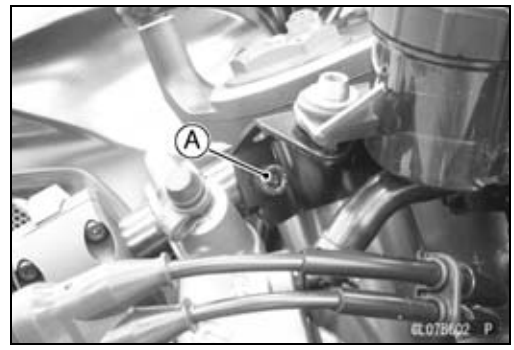

- Remove:
  Front Brake Fluid Reservoir Bracket Bolt [A]

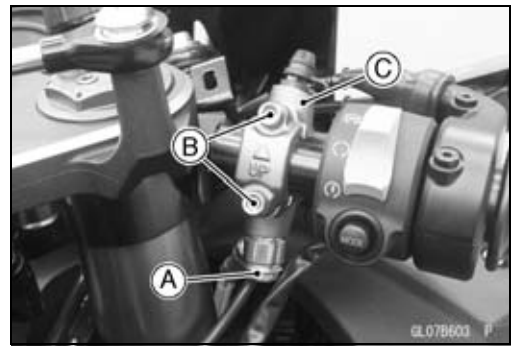

- Remove the banjo bolt [A] to disconnect the brake hose from the master cylinder.

NOTICE
Brake fluid quickly damages painted plastic surfaces; any spilled fluid should be completely washed away immediately.

- ○Take care not to spill the brake fluid on the painted or plastic parts.
- ○Temporarily secure the end of the brake hose to some high place to keep fluid loss to a minimum.
- ○Immediately wash away any brake fluid that spills.
- Remove the clamp bolts [B], and take off the master cylinder [C] as an assembly with the reservoir, brake lever, and brake light switch installed.

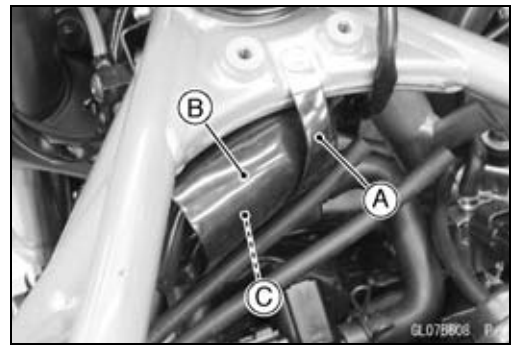

- Remove the fuel tank (see Fuel Tank Removal in the Fuel System (DFI) chapter).
- Other than US and CA models, remove the canister (see Evaporative Emission Control System Inspection (AU, CAL, CN, ID, MY, PH, SEA-B1, SEA-B3, TH and WVTA (FULL) Models) in the Periodic Maintenance chapter).
- For US and CA models, open the clamp [A].
- Slide the dust cover [B].
- Disconnect the front brake light switch connector [C].

Master Cylinder

Front Master Cylinder Installation

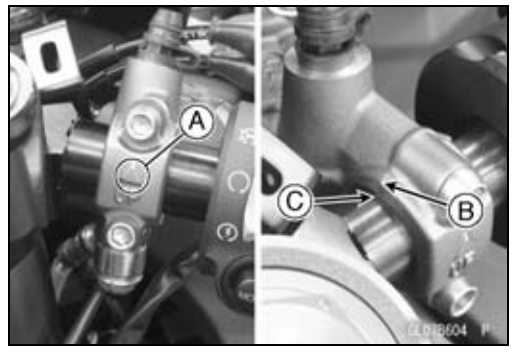

- Run the front brake light switch lead correctly (see Cable, Wire, and Hose Routing section in the Appendix chapter).
- Connect the front brake light switch connector.
- Install the master cylinder clamp so that the arrow mark [A] faces upward.
- Set the front master cylinder to match its mating surface [B] to the punch mark [C] of the handlebar.
- Tighten the upper clamp bolt first, and then the lower clamp bolt.

Torque - Front Master Cylinder Clamp Bolts: 11 N·m (1.1 kgf·m, 97 in·lb)

- Replace the washers that are on each side of the hose fitting with new ones.
- Install the brake hose (see Cable, Wire, and Hose Routing section in the Appendix chapter).
- Tighten:

Torque - Brake Hose Banjo Bolt: 25 N·m (2.5 kgf·m, 18 ft·lb)

- Bleed the brake line (see Brake Line Bleeding).
- Check the brake for good braking power, no brake drag, and no fluid leakage.
- Install the fuel tank (see Fuel Tank Installation in the Fuel System (DFI) chapter).

Rear Master Cylinder Removal

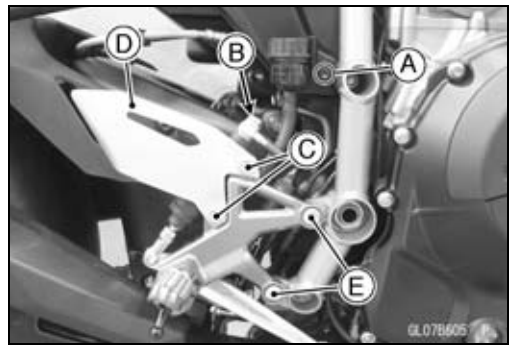

- Remove the bolt [A] and stopper.
- Remove the brake hose banjo bolt [B] and disconnect the brake hose.

NOTICE
Brake fluid quickly damages painted plastic surfaces; any spilled fluid should be completely washed away immediately.

- ○Take care not to spill the brake fluid on the painted or plastic parts.
- ○Temporarily secure the end of the brake hose to some high place to keep fluid loss to a minimum.
- ○Immediately wash away any brake fluid that spills.
- Remove:
  Rear Master Cylinder Mounting Bolts [C]
  Heel Guard [D]
  Footpeg Bracket Bolts [E]

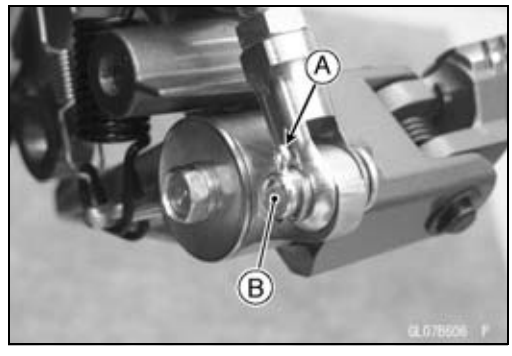

- Remove:
  Cotter Pin [A]
  Joint Pin [B]
- Drain the brake fluid from the rear brake fluid reservoir.

Master Cylinder

Rear Master Cylinder Installation

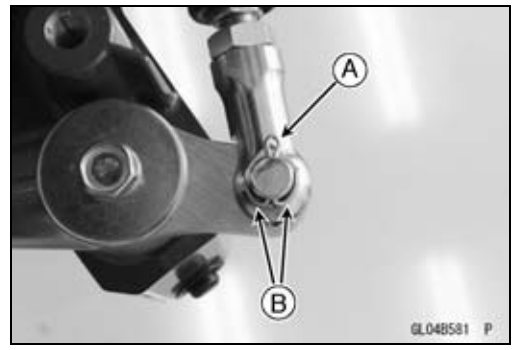

- Replace the cotter pin [A] with a new one.
- Insert the cotter pin and bend the pin ends [B].

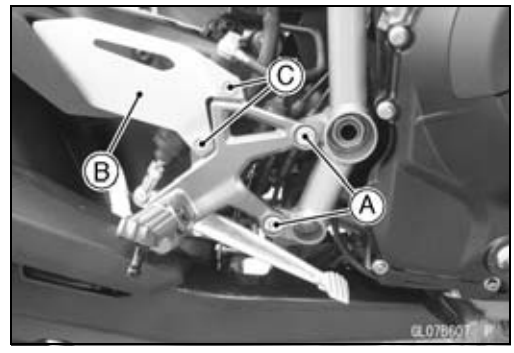

- Apply a non-permanent locking agent to the threads of the footpeg bracket bolts [A].
- Tighten:

Torque - Footpeg Bracket Bolts: 25 N·m (2.5 kgf·m, 18 ft·lb)

- Install the heel guard [B].
- Apply a non-permanent locking agent to the threads of the rear master cylinder mounting bolts [C].
- Tighten:

Torque - Rear Master Cylinder Mounting Bolts: 25 N·m (2.5 kgf·m, 18 ft·lb)

NOTE

○*After installation, check that the rear brake light switch spring is hooked on the return spring.*

- Replace the washers that are on each side of hose fitting with new ones.
- Install the brake hose.

○Touch the brake hose to the stopper of the rear master cylinder.

- Tighten:

Torque - Brake Hose Banjo Bolt: 25 N·m (2.5 kgf·m, 18 ft·lb)

- Bleed the brake line (see Brake Line Bleeding).
- Check the brake for good braking power, no brake drag, and no fluid leakage.

Brake Disc

Front Brake Disc Removal

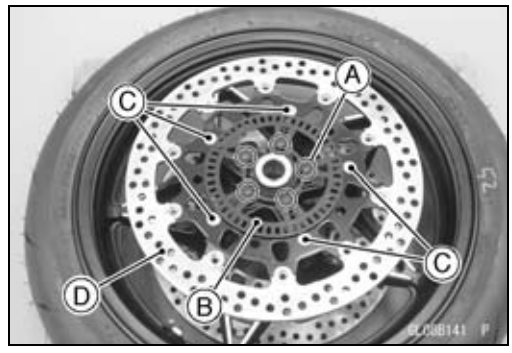

- Remove:
  Front Wheel (see Front Wheel Removal in the Wheels/Tires chapter)
  Bolts [A]
  Front Wheel Rotation Sensor Rotor [B]
  Front Brake Disc Mounting Bolts [C]
  Front Brake Disc [D]

Front Brake Disc Installation

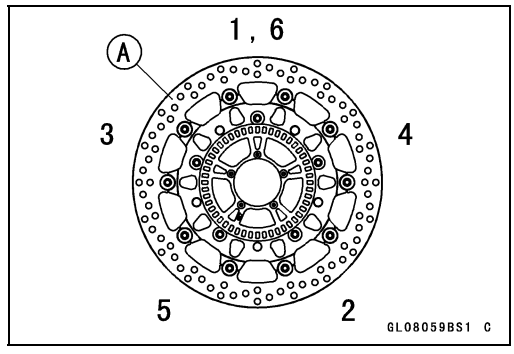

- Install the front brake disc [A] so that chamfer side faces out.
- Apply a non-permanent locking agent to the threads of the front brake disc mounting bolts.
- Tighten the front brake disc mounting bolts following the specified tightening sequence [1 ~ 6].

Torque - Front Brake Disc Mounting Bolts: 27 N·m (2.8 kgf·m, 20 ft·lb)

- Install the front wheel rotation sensor rotor so that chamfer side faces out.
- Tighten the bolts following the specified tightening sequence [1 ~ 6].
- Install the front wheel (see Front Wheel Installation in the Wheels/Tires chapter).

Rear Brake Disc Removal

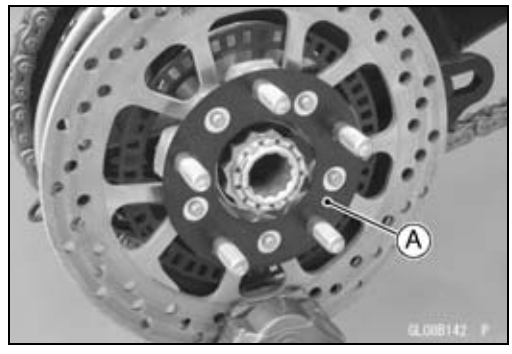

- Remove:
  Rear Wheel (see Rear Wheel Removal in the Wheels/Tires chapter)
  Plate [A]
- Remove the rear caliper from the rear caliper holder.

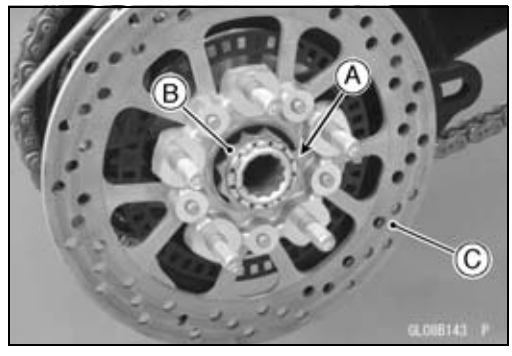

- Remove:
  Snap Ring [A]
  Rear Axle Nut [B] and Washer
  Rear Brake Disc Assembly [C]

NOTE

○*Use the 46 mm wrench (12 pt.) while holding the left side of the rear axle with the Allen wrench.*

Brake Disc

- Remove:
  Rear Brake Disc Mounting Bolts [A]
  Rear Wheel Rotation Sensor Rotor [B]
  Rear Brake Disc [C]

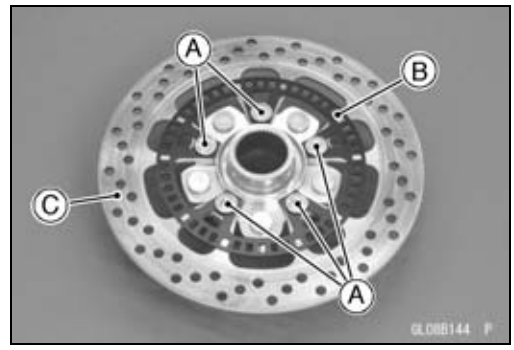

Rear Brake Disc Installation

- Install the rear brake disc [A] so that marked side [B] faces wheel side.
- Install the rear wheel rotation sensor rotor [C] so that the marked side [D] faces out.
- Apply a non-permanent locking agent to the threads of the rear brake disc mounting bolts.
- Tighten the rear brake disc mounting bolts following the specified tightening sequence [1 ~ 6].

Torque - Rear Brake Disc Mounting Bolts: 27 N·m (2.8 kgf·m, 20 ft·lb)

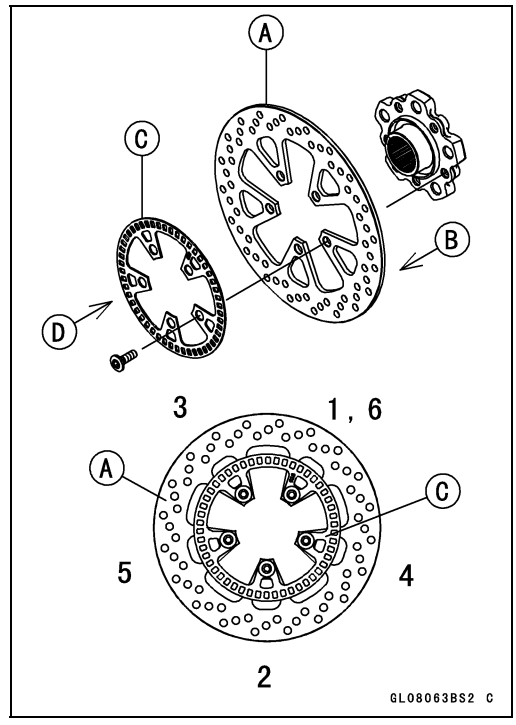

- Install the rear brake disc assembly [A] to the rear axle [B].

○Align the lines [C].

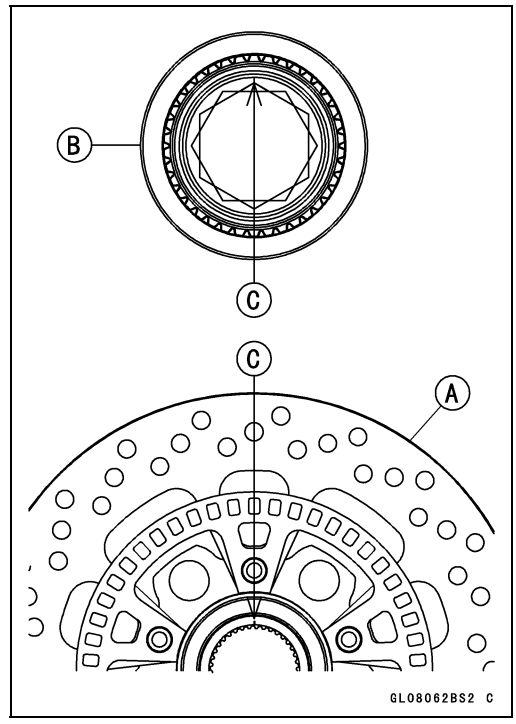

Brake Disc

● Install:
Washer
● Tighten:

Torque - Rear Axle Nut [A], First: 220 N·m (22.4 kgf·m, 162 ft·lb)

NOTE

○*Use the 46 mm wrench (12 pt.) while holding the left side of the rear axle with the Allen wrench.*

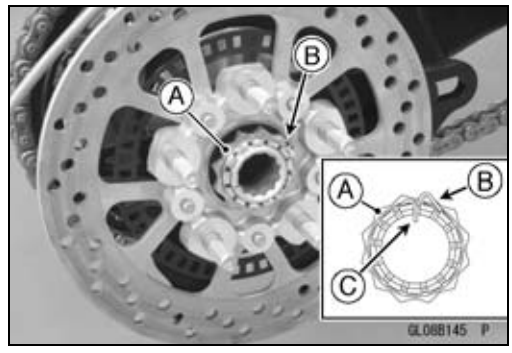

● Loosen the rear axle nut, and tighten it again.

Torque - Rear Axle Nut, Final: 255 N·m (26.0 kgf·m, 188 ft·lb)

● Replace the snap ring [B] with a new one.
● Insert the snap ring end [C] to the hole of the rear axle as shown.
● Install the removed parts (see appropriate chapters).

Brake Disc Wear Inspection

● Measure the thickness of each disc [A] at the point where it has worn the most.
★If the disc has worn past the service limit, replace it.
Measuring Area [B]

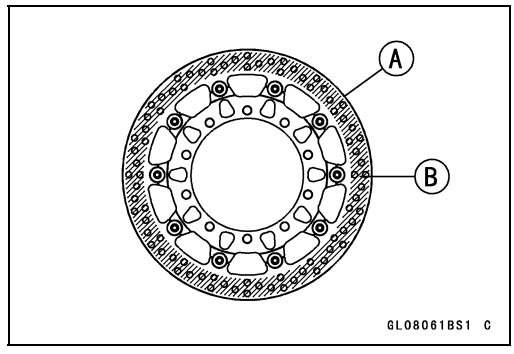

Brake Discs Thickness

Standard:	
Front	**5.3 ~ 5.7 mm (0.21 ~ 0.22 in.)**
Rear	**4.8 ~ 5.2 mm (0.19 ~ 0.20 in.)**
Service Limit:	
Front	**5.0 mm (0.20 in.)**
Rear	**4.5 mm (0.18 in.)**

Brake Disc Warp Inspection

● Raise the front/rear wheel off the ground a suitable stand.
○For front disc inspection, turn the handlebars fully to one side.
● Set up a dial gauge against the disc [A] as shown and measure disc runout, while turning [B] the wheel by hand.
★If runout exceeds the service limit, replace the disc.

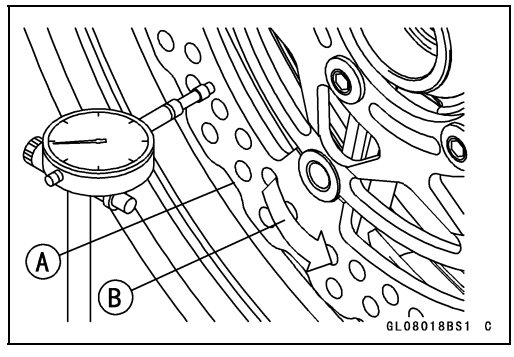

Disc Runout

Standard	**TIR 0.15 mm (0.0059 in.) or less**
Service Limit	**TIR 0.3 mm (0.013 in.)**

Brake Fluid

Brake Fluid Level Inspection

- Refer to the Brake Fluid Level Inspection in the Periodic Maintenance chapter.

Brake Fluid Change

- Refer to the Brake Fluid Change in the Periodic Maintenance chapter.

Brake Line Bleeding

The brake fluid has a very low compression coefficient so that almost all the movement of the brake lever or pedal is transmitted directly to the caliper for braking action. Air, however, is easily compressed. When air enters the brake lines, brake lever or pedal movement will be partially used in compressing the air. This will make the lever or pedal feel spongy, and there will be a loss in braking power.

⚠ WARNING

Air in the brake lines diminish braking performance and can cause an accident resulting in injury or death. If the brake lever or pedal has a soft or "spongy" feeling mushy when it is applied, there might be air in the brake lines or the brake may be defective. Do not operate the vehicle and service the brake system immediately.

⚠ WARNING

Mixing brands and types of brake fluid can reduce the brake system's effectiveness and cause an accident resulting in injury or death. Do not mix two brands of brake fluid. Change the brake fluid in the brake line completely if the brake fluid must be refilled but the type and brand of the brake fluid that is already in the reservoir are unidentified.

Recommended Brake Fluid
Grade: DOT4

Front Brake Line

NOTICE

Brake fluid quickly damages painted plastic surfaces; any spilled fluid should be completely washed away immediately.

- Remove:
  Front Brake Fluid Reservoir Cap Screws [A]
  Front Brake Fluid Reservoir Cap [B]
  Diaphragm
- Fill the reservoir with fresh brake fluid to the upper level line in the reservoir.
- Slowly pump the brake lever several times until no air bubbles can be seen rising up through the fluid from the hole at the bottom of the reservoir.

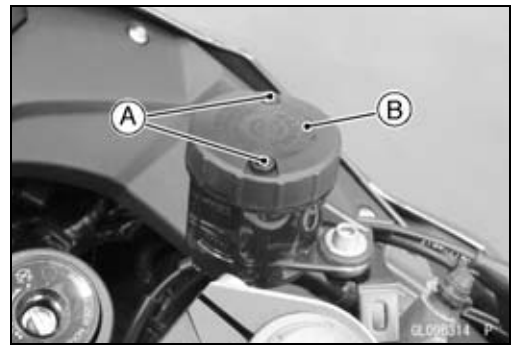

Brake Fluid

- Remove the rubber cap from the bleed valve on the front master cylinder.
- Attach a clear plastic hose [A] to the bleed valve, and run the other end of the hose into a container.



- Bleed the brake line and the master cylinder.

○Repeat this operation until no more air can be seen coming out into the plastic hose.

1. Pump the brake lever until it becomes hard, and apply the brake and hold it [A].
2. Quickly open and close [B] the bleed valve while holding the brake applied.
3. Release the brake [C].

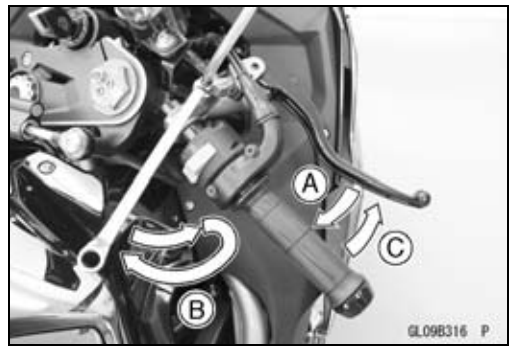

NOTICE

After pumping the brake lever several times, releasing it without opening and closing of the bleed valve may cause brake fluid to be blown back from the master cylinder reservoir. Brake fluid spilt on painted surfaces and plastic parts will quickly damage them. Be sure to open and close the bleed valve.

NOTE

○*The fluid level must be checked often during the bleeding operation and replenished with fresh brake fluid as necessary. If the fluid in the reservoir runs completely out any time during bleeding, the bleeding operation must be done over again from the beginning since air will have entered the line.*

- Remove the clear plastic hose.
- Tighten the bleed valve, and install the rubber cap.

Torque - Front Master Cylinder Bleed Valve: 5.5 N·m (0.56 kgf·m, 49 in·lb)

- Remove the rubber cap from the bleed valve on the front caliper.
- Attach a clear plastic hose [A] to the bleed valve, and run the other end of the hose into a container.



Brake Fluid

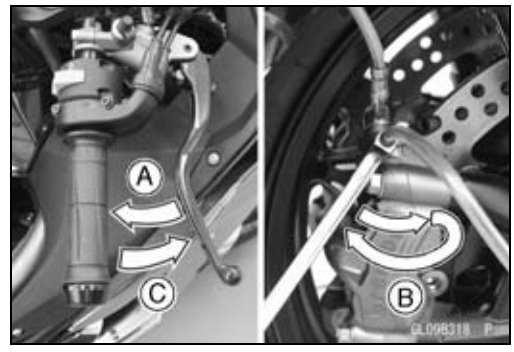

- Bleed the brake line and the caliper.

○Repeat this operation until no more air can be seen coming out into the plastic hose.

1. Pump the brake lever until it becomes hard, and apply the brake and hold it [A].
2. Quickly open and close [B] the bleed valve while holding the brake applied.
3. Release the brake [C].

NOTE

○*The fluid level must be checked often during the bleeding operation and replenished with fresh brake fluid as necessary. If the fluid in the reservoir runs completely out any time during bleeding, the bleeding operation must be done over again from the beginning since air will have entered the line.*

○*Tap the brake hose lightly from the caliper to the reservoir for more complete bleeding.*

○*First bleeding the right caliper then repeat the above steps for the left caliper.*

- Remove the clear plastic hose.
- Tighten the bleed valve, and install the rubber cap.

Torque - Front Caliper Bleed Valves: 16 N·m (1.6 kgf·m, 12 ft·lb)

- Install:
  Diaphragm
  Front Brake Fluid Reservoir Cap
- Tighten:

Torque - Front Brake Fluid Reservoir Cap Screws: 0.70 N·m (0.07 kgf·m, 6.2 in·lb)

Rear Brake Line

NOTICE
Brake fluid quickly damages painted plastic surfaces; any spilled fluid should be completely washed away immediately.

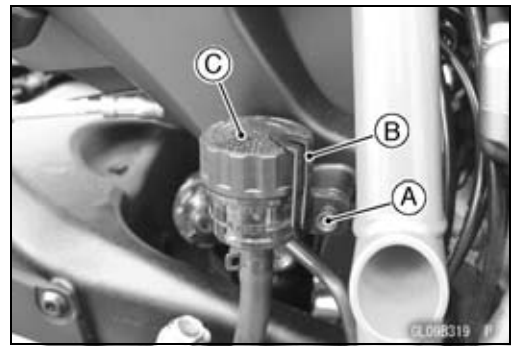

- Remove:
  Bolt [A]
  Stopper [B]
  Rear Brake Fluid Reservoir Cap [C]
  Diaphragm Plate
  Diaphragm
- Fill the reservoir with fresh brake fluid to the upper level line in the reservoir.
- Slowly pump the brake pedal several times until no air bubbles can be seen rising up through the fluid from the hole at the bottom of the reservoir.

Brake Fluid

- Remove the rear caliper with the hose installed (see Rear Caliper Removal).
- Face the bleed valve upward.
- Remove the rubber cap from the bleed valve on the rear caliper.
- Attach a clear plastic hose [A] to the bleed valve, and run the other end of the hose into a container.
- Install the suitable plate [B] between the brake pads.

Rear Brake Disc Thickness (For Reference):
5 mm (0.2 in.)

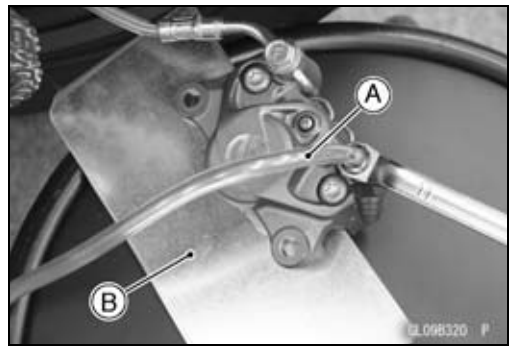

- Bleed the brake line and the caliper.

○Repeat this operation until no more air can be seen coming out into the plastic hose.

1. Pump the brake pedal until it becomes hard, and apply the brake and hold it [A].
2. Quickly open and close [B] the bleed valve while holding the brake applied.
3. Release the brake [C].

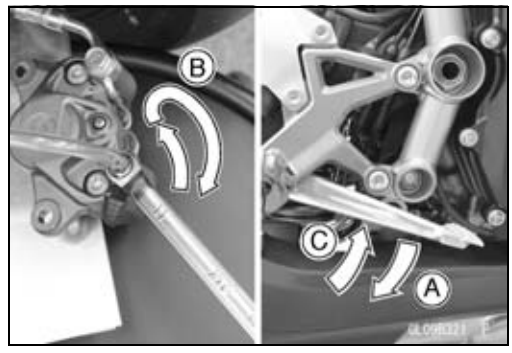

NOTICE

After pumping the brake pedal several times, releasing it without opening and closing of the bleed valve may cause brake fluid to be blown back from the master cylinder reservoir. Brake fluid spilt on painted surface and plastic parts will quickly damage them. Be sure to open and close the bleed valve.

NOTE

○*The fluid level must be checked often during the bleeding operation and replenished with fresh brake fluid as necessary. If the fluid in the reservoir runs completely out any time during bleeding, the bleeding operation must be done over again from the beginning since air will have entered the line.*

○*Tap the brake hose lightly from the caliper to the reservoir for more complete bleeding.*

- Remove the clear plastic hose.
- Tighten the bleed valve, and install the rubber cap.

Torque - Rear Caliper Bleed Valves: 16 N·m (1.6 kgf·m, 12 ft·lb)

- Install:
  Diaphragm
  Diaphragm Plate
  Rear Brake Fluid Cap

Brake Fluid

- Follow the procedure below to install the rear brake fluid reservoir cap correctly.

○First, tighten the brake fluid reservoir cap [A] clockwise [B] by hand until slight resistance is felt indicating that the cap is seated on the reservoir body [C], then tighten the cap an additional 1/6 turn [D] while holding the brake fluid reservoir body.

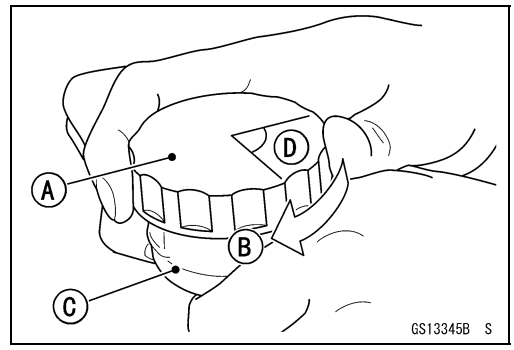

- Install the stopper, and tighten the bolt securely.
- Install the rear caliper (see Rear Caliper Installation).

- Check the fluid level (see Brake Fluid Level Inspection in the Periodic Maintenance chapter).
- After bleeding is done, check the brake for good braking power, no brake drag, and no fluid leakage.

⚠ WARNING

When working with the disc brake, observe the precautions listed below.

- **Never reuse old brake fluid.**
- **Do not use fluid from a container that has been left unsealed or that has been open for a long time.**
- **Do not mix two types and brands of fluid for use in the brake. This lowers the brake fluid boiling point and could cause the brake to be ineffective. It may also cause the rubber brake parts to deteriorate.**
- **Don't leave the reservoir cap off for any length of time to avoid moisture contamination of the fluid.**
- **Don't change the fluid in the rain or when a strong wind is blowing.**
- **Except for the disc pads and disc, use only disc brake fluid, isopropyl alcohol, or ethyl alcohol for cleaning of the brake parts. Do not use any other fluid for cleaning these parts. Gasoline, engine oil, or any other petroleum distillate will cause deterioration of the rubber parts. Oil spilled on any part will be difficult to wash off completely and will eventually deteriorate the rubber used in the disc brake.**
- **When handling the disc pads or disc, be careful that no disc brake fluid or any oil gets on them. Clean off any fluid or oil that inadvertently gets on the pads or disc with a high flash-point solvent. Do not use one which will leave an oily residue. Replace the pads with new ones if they cannot be cleaned satisfactorily.**
- **Brake fluid quickly damages painted surfaces; any spilled fluid should be completely wiped up immediately.**
- **If any of the brake line fittings or the bleed valve is opened at any time, the AIR MUST BE BLED FROM THE BRAKE LINE.**

Brake Hose

Brake Hose Removal/Installation

- Refer to the Brake Hose and Pipe Replacement in the Periodic Maintenance chapter.

Brake Hose and Pipe Inspection

- Refer to the Brake System Inspection in the Periodic Maintenance chapter.

Anti-Lock Brake System

Parts Location

Front Wheel Rotation Sensor [A]
Front Wheel Rotation Sensor Rotor [B]

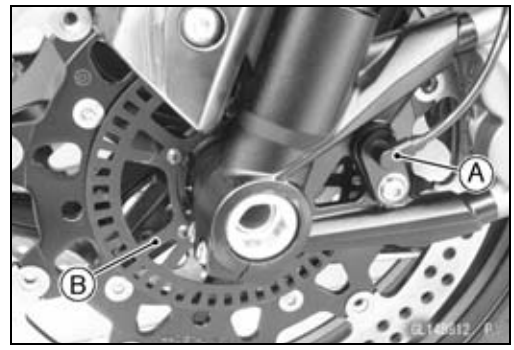

Rear Wheel Rotation Sensor [A]
Rear Wheel Rotation Sensor Rotor [B]

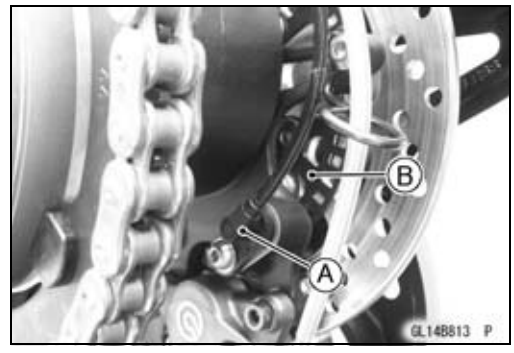

Yellow ABS Indicator Light (LED) [A]
Yellow Warning Indicator Light (LED) [B]
White KIBS Indicator Light (LED) [C]

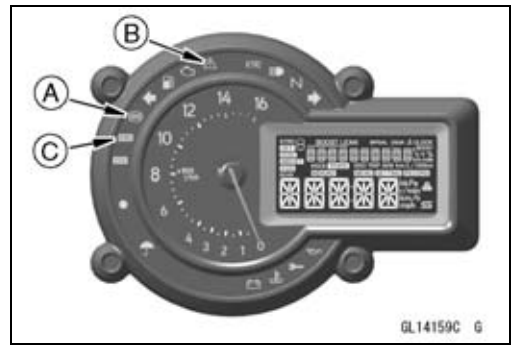

ABS Hydraulic Unit [A]

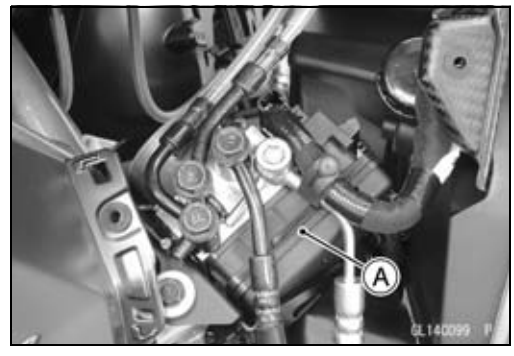

Fuse Box (2) [A]



Anti-Lock Brake System

ABS Kawasaki Diagnosis System Connector [A]

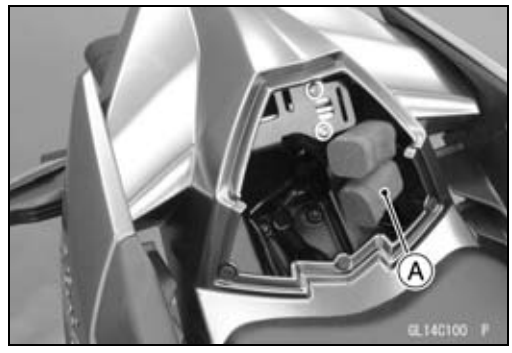

Anti-Lock Brake System

ABS System Circuit

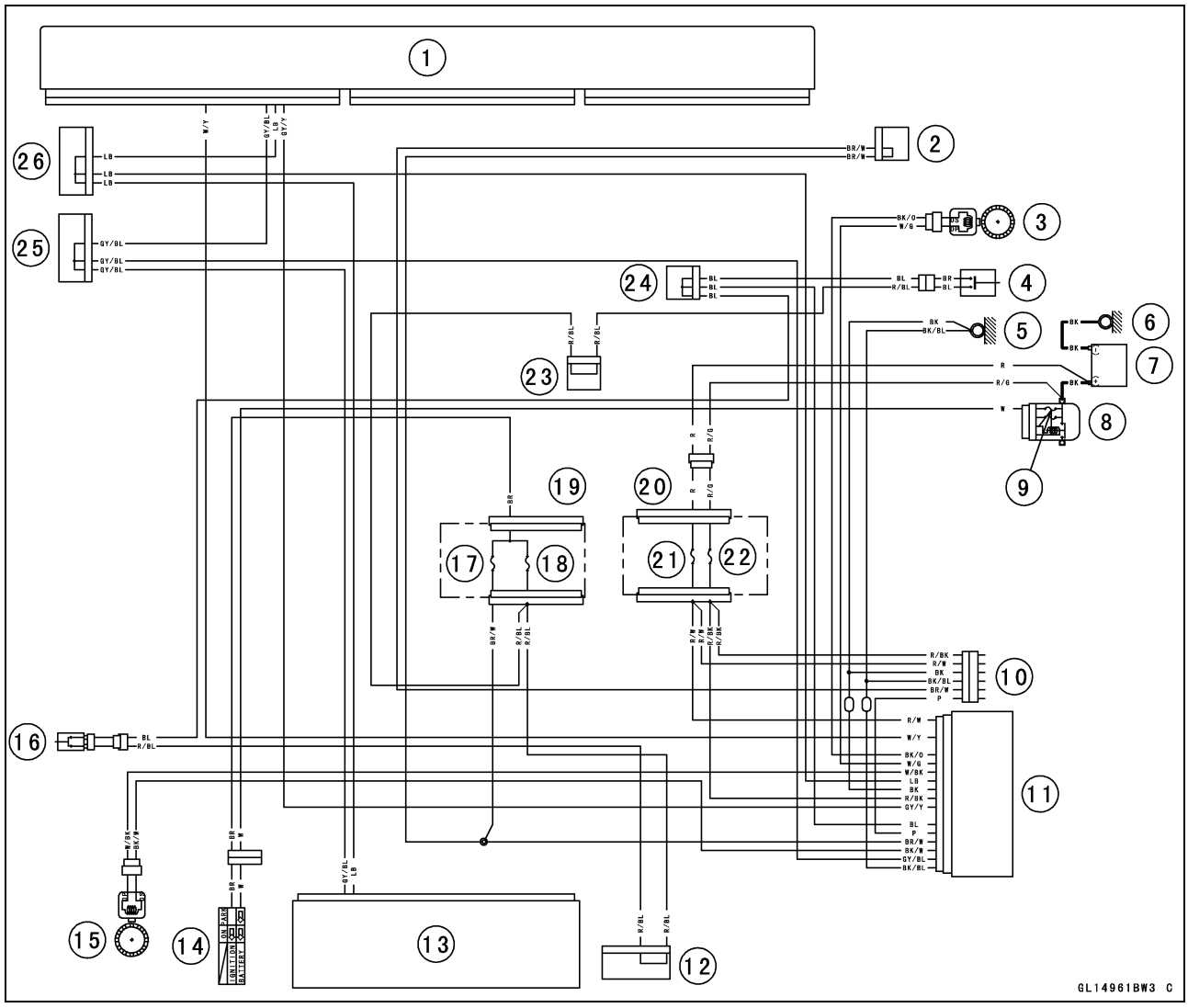

1. ECU
2. Joint Connector F
3. Rear Wheel Rotation Sensor
4. Rear Brake Light Switch
5. Frame Ground (5)
6. Engine Ground
7. Battery 12 V 8.6 Ah
8. Starter Relay
9. Main Fuse 30 A
10. ABS Kawasaki Diagnosis System Connector
11. ABS Hydraulic Unit
12. Joint Connector B
13. Meter Unit
14. Ignition Switch
15. Front Wheel Rotation Sensor
16. Front Brake Light Switch
17. Ignition Fuse 15 A
18. Brake Light/Horn Fuse 10 A
19. Fuse Box (1)
20. Fuse Box (2)
21. ABS Motor Relay Fuse 25 A
22. ABS Solenoid Valve Relay Fuse 15 A
23. Joint Connector C
24. Joint Connector D
25. Joint Connector I
26. Joint Connector H

○Color Codes:

BK: Black	GY: Gray	PU: Purple
BL: Blue	LB: Light Blue	R: Red
BR: Brown	LG: Light Green	V: Violet
CH: Chocolate	O: Orange	W: White
DG: Dark Green	P: Pink	Y: Yellow
G: Green		

Anti-Lock Brake System

ABS Hydraulic Unit Terminal Names

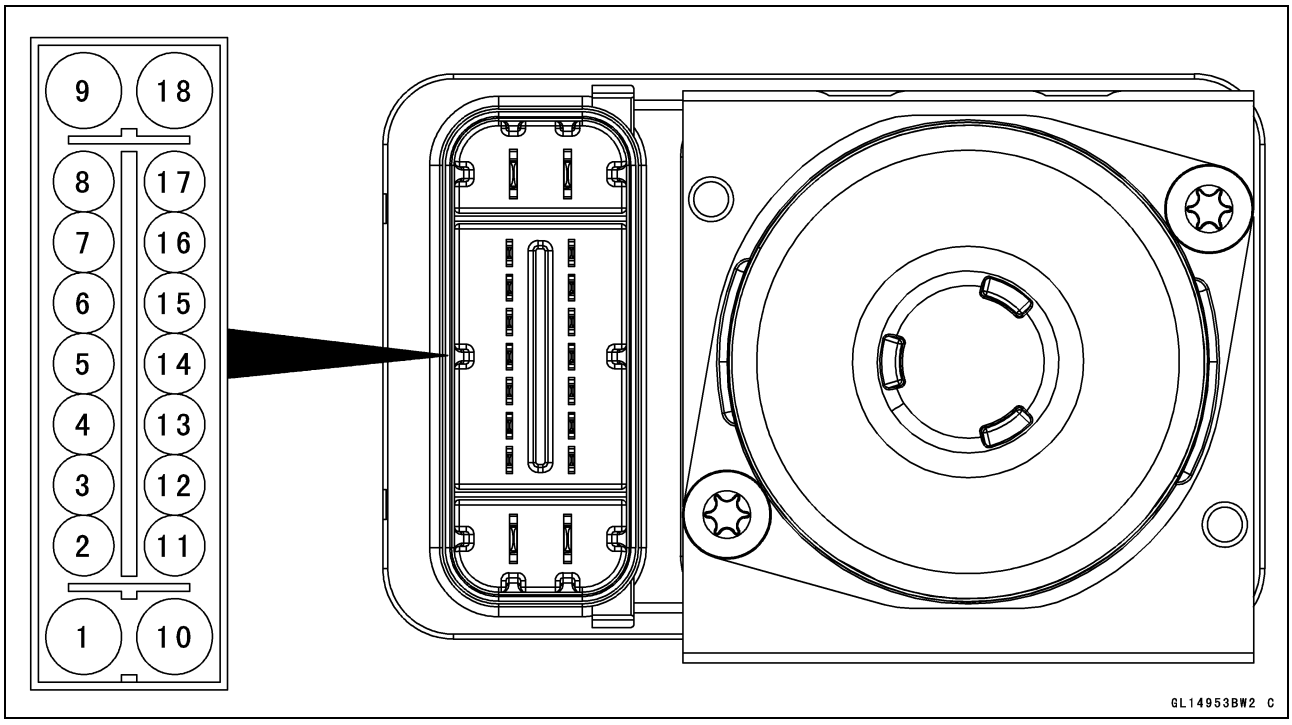

1. Ground: BK/BL
2. CAN Communication Line (High): GY/BL
3. Front Wheel Rotation Sensor Signal Input: BK/W
4. Power Supply: BR/W
5. ABS Kawasaki Diagnosis System Terminal: P
6. Front and Rear Brake Light Switch Signal: BL
7. Unused
8. Front Wheel Rotation Sensor Signal Output: GY/Y
9. Power Supply to ABS Solenoid Valve Relay: R/BK
10. Ground to Motor: BK
11. CAN Communication Line (Low): LB
12. Power Supply to Front Wheel Rotation Sensor: W/BK
13. Power Supply to Rear Wheel Rotation Sensor: W/G
14. Rear Wheel Rotation Sensor Signal Input: BK/O
15. Unused
16. Rear Wheel Rotation Sensor Signal Output: W/Y
17. Unused
18. Power Supply to ABS Motor Relay: R/W

Anti-Lock Brake System

ABS Servicing Precautions

There are a number of important precautions that should be followed servicing the ABS.

- This ABS is designed to be used with a 12 V sealed battery as its power source. Do not use any other battery except for a 12 V sealed battery as a power source.
- Do not reverse the battery cable connections. This will damage the ABS hydraulic unit.
- To prevent damage to the ABS parts, do not disconnect the battery cables or any other electrical connections when the ignition switch is on or while the engine is running.
- Take care not to short the leads that are directly connected to the battery positive (+) terminal to the chassis ground.
- Do not turn the ignition switch on while any of the ABS electrical connectors are disconnected. The ABS hydraulic unit memorizes service codes.
- Do not spray water on the electrical parts, ABS parts, connectors, leads and wiring.
- If a transceiver is installed on the motorcycle, make sure that the operation of the ABS is not influenced by electric wave radiated from the antenna. Locate the antenna as far as possible away from the ABS hydraulic unit.
- Whenever the ABS electrical connections are to be disconnected, first turn off the ignition switch.
- The ABS parts should never be struck sharply, as with a hammer, or allowed to fall on a hard surface. Such a shock to the parts can damage them.
- The ABS parts cannot be disassembled. Even if a fault is found, do not try to disassemble and repair the ABS parts, replace it.
- The ABS has many brake lines, pipes, and leads. And the ABS cannot detect problems with the conventional braking system (brake disc wear, unevenly worn brake pad, and other mechanical faults). To prevent trouble, check the brake lines and pipes for correct routing and connection, the wiring for correct routing, and the brakes for proper braking power. Be sure to check for fluid leakage, and bleed the brake line thoroughly.

⚠ WARNING

Air in the brake lines diminish braking performance and can cause an accident resulting in injury or death. If any of the brake line fittings, including the ABS hydraulic unit joint nuts, or the bleed valve is opened at any time, the air must be bled completely from the brake line. If the brake lever has a soft or "spongy" feeling mushy when it is applied, there might be air in the brake lines or the brake may be defective. Do not operate the vehicle and service the brake system immediately.

NOTICE

Do not ride the motorcycle with air in the brake line, or the ABS could malfunction.

Anti-Lock Brake System

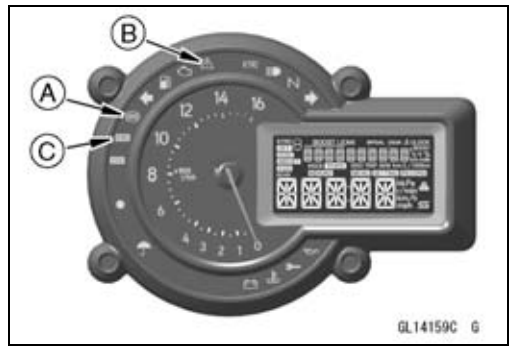

○The yellow ABS indicator light (LED) [A] and yellow warning indicator light (LED) [B]/white KIBS indicator light (LED) [C] may go on or blink if the tire pressure is incorrect, a non-recommended tire is installed, or the wheel is deformed. If the indicator light (LED) goes on or blinks, remedy the problem and clear the service code.

⚠ WARNING

Use of non-recommended tires may cause malfunctioning of ABS and can lead to extended braking distance resulting in an accident causing serious injury or death. Always use recommended standard tires for this motorcycle.

○The yellow ABS indicator light (LED) may come on if the engine is run with the motorcycle on a stand and the transmission in gear. If the indicator light comes on, just turn the ignition switch off, then clear service code B42, which indicates a “Faulty front wheel rotation sensor.”

○When the ABS operates, the ABS makes noise and the rider feels the reaction force on the brake lever and brake pedal. This is a normal condition. It informs the rider that the ABS is operating normally.

○Service codes detected once by the ABS hydraulic unit will be memorized in the ABS hydraulic unit.

○A fully charged battery is a must for conducting reliable self-diagnosis. Test run the motorcycle at a speed of more than 20 km/h (12 mph) to see that the yellow ABS indicator light (LED) and yellow warning indicator light (LED)/white KIBS indicator light (LED) do not go on or blink. Finally, test run the motorcycle at a speed of more than 30 km/h (20 mph) and brake suddenly to see that the motorcycle stops without loss of steering control and the ABS operates normally (The reaction force generated is felt in the brake lever and pedal.). This completes the final inspection.

Anti-Lock Brake System

ABS Troubleshooting Outline

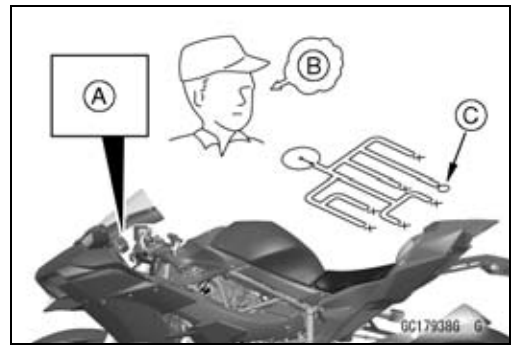

When an abnormality in the system occurs, the yellow ABS indicator light (LED) goes on and/or yellow warning indicator light (LED) goes on and white KIBS indicator light (LED) blinks to alert the rider. In addition, the nature of the fault is stored in the memory of the ABS hydraulic unit and FI ECU, and when in the self-diagnosis mode, the service code [A] is displayed on the LCD by the “B” and the number of two digits. When repair has been done, the indicator lights (LED) go off and service codes are not displayed. But the service codes stored in memory of the ABS hydraulic unit ECU and FI ECU are not erased to preserve the problem history.

When, due to a malfunction, the yellow ABS indicator light (LED), yellow warning indicator light (LED) and white KIBS indicator light (LED) remain lit or blink, get a thorough understanding of the background before starting the repair work. Ask the rider about the conditions [B] under which the problem occurred and try to determine the cause [C]. Do not rely solely on the ABS and DFI self-diagnosis function, use common sense; check the brakes for proper braking power, and brake fluid level, search for leaks, etc.

Even when the ABS and DFI are operating normally, the yellow ABS indicator light (LED) goes on and/or yellow warning indicator light (LED) goes on and white KIBS indicator light (LED) blinks under the conditions listed below. Turn the ignition switch off to go off the indicator lights (LED).

- ○After continuous riding on a rough road.
- ○When the engine is started with the stand raised and the transmission engaged, and the rear wheel turns.
- ○When accelerating so abruptly that the front wheel leaves the ground.
- ○When the ABS has been subjected to strong electrical interference.
- ○When tire pressure is abnormal. Adjust tire pressure.
- ○When a tire different in size from the standard size is being used. Replace with standard size.
- ○When the wheel is deformed. Replace the wheel.

Much of the ABS troubleshooting work consists of confirming continuity of the wiring. The ABS parts are assembled and adjusted by the manufacturer, so there is no need to disassemble or repair them. Replace the ABS hydraulic unit.

The basic troubleshooting procedures are listed below.

- ● Carry out pre-diagnosis inspections as a preliminary inspection.
- ● Determine the fault using the self-diagnosis function.
- ● Check wiring and connections from the ABS hydraulic unit connector to the suspected faulty ABS part, using a digital meter.

Anti-Lock Brake System

- Visually inspect the wiring for signs of burning or fraying.

★If any wiring is poor, replace the damaged wiring.

- Pull each connector apart and inspect it for corrosion, dirt and damage.

★If the connector is corroded or dirty, clean it carefully. If it is damaged, replace it.

- Check the wiring for continuity.

○Use the wiring diagram to find the ends of the lead which is suspected of being a problem.

○Connect the digital meter between the ends of the leads.

★If the digital meter does not read about 0 Ω, the lead is defective. Replace the main harness [A] if necessary.

- Narrow down suspicious parts and close in on the faulty ABS part by repeating the continuity tests.

★If no abnormality is found in the wiring or connectors, the ABS parts are the next likely suspects. Check each part one by one.

★If an abnormality is found, replace the affected ABS part.

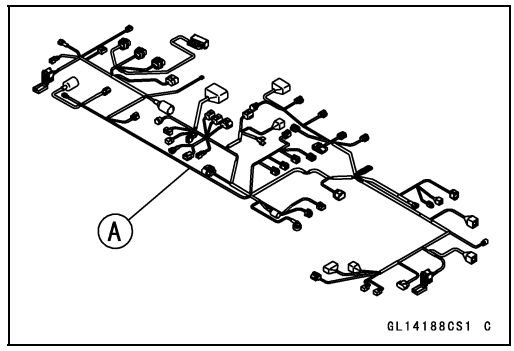

Anti-Lock Brake System

ABS Diagnosis Flow Chart

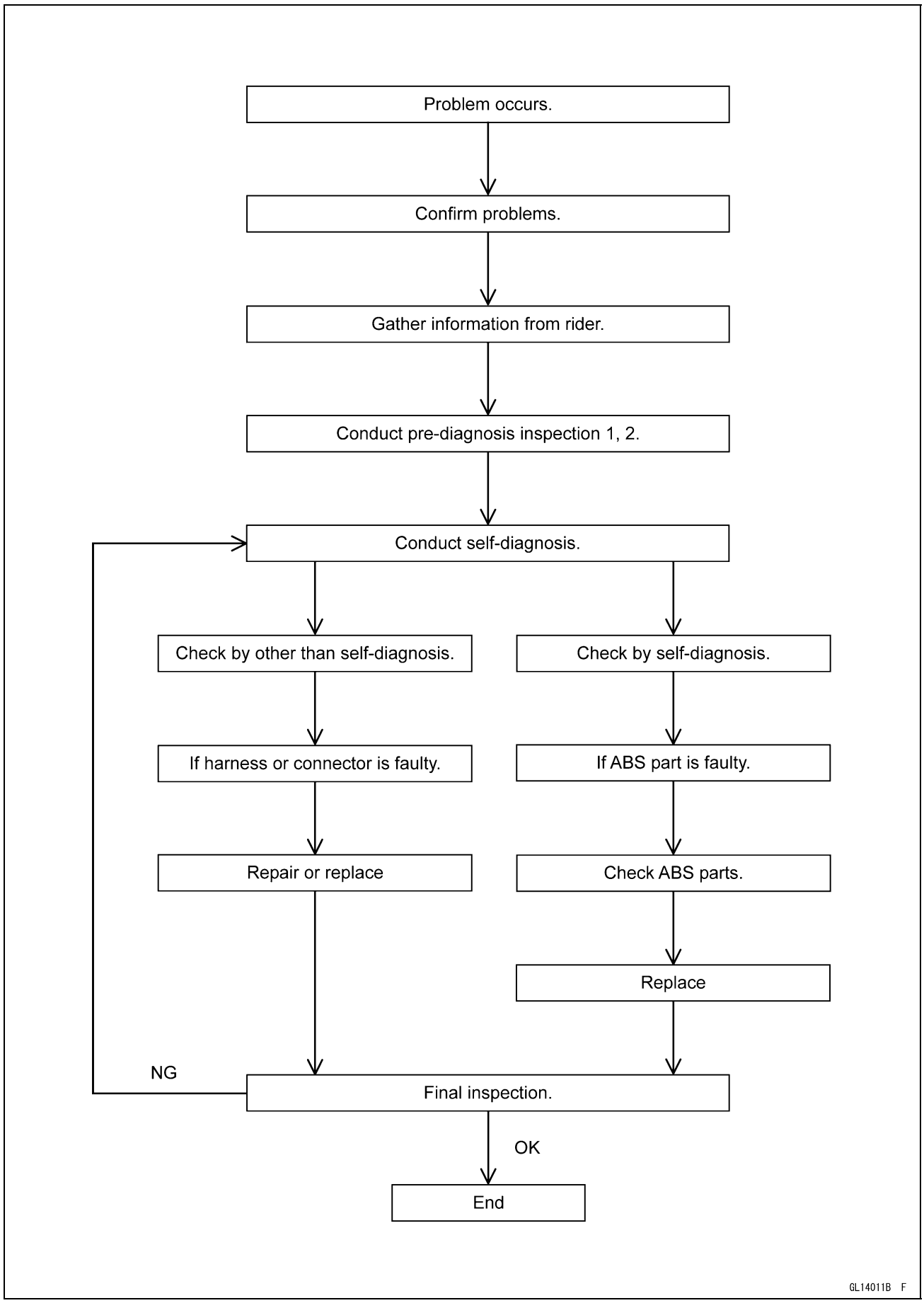

Inquiries to Rider

○Each rider reacts to problems in different ways, so it is important to confirm what kind of problem the rider is experiencing.
○Try to find out exactly what problem occurs under exactly what conditions by asking the rider; knowing this information may help you reproduce the problem in the workshop.
○The diagnosis sheet will help prevent you from overlooking any key information, so always use it.

Sample Diagnosis Sheet 1

Rider Name: ……..…….. Registration No. (license plate No.): ……
Date of registration: …..……. Model: ……
Vin No.: …..……..……..... Odometer reading: …….. km or miles
Engine No.: ..…… Odometer reading when problem first occured: …… km or miles

Question	Description			Answer	Advice to customer
Which statement/s best describes the fault with the ABS system?	*Yellow ABS indicator light (LED) illuminated?*	*Flashing*			A fault has been detected with the ABS system.
		Continuous			
		Not working			
	ABS not working				Further inspection by technician required.
	ABS operates too frequently				Continuous riding on rough or un-even surfaces can cause the ABS to operate more frequently.
	Stopping distance too long				
	Does the wheel lock when you apply the brakes				Further inspection by technician required.
	Brake can't be released				
	Other				
Do the front and rear brake levers feel normal during application?	*Normal*				Further inspection by technician required.
	Abnormal	*Long stroke (lever feels soft and moves back close to the handle bar)*			This indicates a probable fault with the braking system and should be inspected immediately.
		Limited stroke (lever feels hard and has little movement)			
		Pulsing/vibrating			
	Which lever? (front, rear or both)				
When does the fault occur?	*During start up / stationary*	*(Is a centre stand or service stand used)*			If the motorcycle engine is left running whilst on its centre or service stand, mechanical drag can cause the rear wheel to rotate. If the rear wheel rotates the ABS system may detect a fault. Turning off the ignition switch and restarting should reset the yellow ABS indicator light (LED) if no problems are detected. However the service code will be stored in the ABS ECU and should be reset by the dealer.
	Driving below 6 km/h (4mph) (Speeds vary depending on model)				The ABS system is not active at these speeds.
	Driving above 6 km/h (4mph) (Speeds vary depending on model)				This may be normal ABS operation if the road conditions are poor.
	When slowing or stopping (Rate of brake application)	*Gradual braking*	*front only*		
			rear only		
			both brakes		
		During abrupt braking	*front only*		Abrupt braking may cause the ABS to function early as the suspension may not have had enough time to react to the situation.
			rear only		
			both brakes		
		There is no specific pattern			
	Other				

Question	Description		Answer	Advice to customer
How often does the fault occur?	*Every time ignition is switched on*			Further inspection by technician required.
	Every time the brakes are used (Continually)			
	No regularity (Intermittent)			
	Other			
During which riding conditions does the fault occur?	*Highway riding*	*Any comment on riding style maybe applicable.*		Braking and handling characteristics can vary with vehicle speed, therefore ABS operation during braking at highway speed may be more frequent.
	City riding			Accelerating abruptly between traffic signals so that the front wheel leaves the ground can trigger the ABS warning indicator. Normal riding on good condition roads should allow the yellow ABS indicator light (LED) to reset automatically.
	Minor/country roads riding			Continuous riding on rough or uneven surfaces can cause the ABS to operate more frequently.
	Cross country riding			Continuous riding on loose or off road surfaces can trigger the ABS warning indicator. Normal riding on good condition roads should allow the yellow ABS indicator light (LED) to reset automatically.
	Track/closed circuit riding			Excessive use of the ABS system due to continuous fast riding can trigger the ABS warning indicator. Normal riding on good condition roads should allow the yellow ABS indicator light (LED) to reset automatically.
	All			Further inspection by technician required.
In what road conditions does the problem occur?	*Dry*			Further inspection by technician required.
	Wet			In wet conditions it is possible that the ABS is operating normally
	Snow/Ice			In snow/icy conditions it is possible that the ABS is operating normally
	Loose/rough surface (gravel)			On loose/rough surfaces it is possible that the ABS is operating normally
Motorcycle condition	*Has the machine been regularly serviced according to the periodic maintenance schedule?*			If the service history is incomplete it is possible that a fault may become apparent. For example, failure to replace the brake fluid during periodic maintenance can cause the hydraulic unit to become internally damaged.
	Have there been any previous braking problems?			Any previous braking problems may be related to the ABS complaint. It is important that the customer provides as much information as possible so that diagnosis can be made as quickly as possible.
	Have any aftermarket parts been fitted?	*OE Tires and brakes?*		Further inspection by technician required.
	Have the daily safety checks been carried out? (tire pressures / condition etc.)			Worn tires or tires with incorrect pressures can cause an ABS fault. It is important to regularly check both tire condition and pressure.

Dealer Findings

Sample Diagnosis Sheet 2

Question/Action	Description		Answer	Advice to technician
Review customer feedback information	*Carefully analyze the information that has been collected from the customer. Use this information to help you perform your initial diagnosis.*			
Check to see if any diagnostic codes are present	*1*			If codes are present refer to service manual.
	2			
	3			
	4			
	5			
Inspect the following	*Battery voltage*			The ABS is designed to be used with a 12 V sealed battery as its power source. Only use the battery specified by the service manual as a power source. If low battery voltage is detected service codes: B52 or B53 will be displayed.
	Tires type/size		Front ……. Rear …….	Refer to service manual.
	Tire pressures		Front …… Rear ……	
	Tire condition		Front …… Rear ……	Excessive or abnormal wear can be recognized as an ABS fault.
	Wheel rotation sensor air gap		Front ……. Rear …….	Refer to service manual. Also check that the wheel orientation is correct.
	Wheel condition (damaged or deformed)		Front ……. Rear …….	Refer to service manual.
	Brake system general condition		Front ……. Rear …….	Pad wear/Front and rear operation/Condition of hoses etc.
	Brake disc run-out		Front ……. Rear …….	Refer to service manual.
Additional information on the yellow ABS indicator light (LED)	*Continuous*	*Stays on all the time while ignition on*		Check for diagnostic trouble codes.
		Turns off when first moving off but turns on again and stays on		
		Turns on when brake(s) are operated		
		Other:		
	Not working	*Turns off soon after moving off*		Test the operation of the light by turning on the ignition. If the light fails to illuminate ensure that the bike is equipped with ABS before inspecting the meter panel for faults as per the service manual.
		Turns off after riding for a while		
		Other:		
	How many times does it flash per 10 seconds?		5, 15, or 20	By flashing the ABS unit is indicating additional fault codes that may not be listed in the service manual. Please carefully count the number of flashes per 10 seconds before contacting Kawasaki. *(Kawasaki may request a video of the flashing sequence)*
			Other: ……. times	

Anti-Lock Brake System

Pre-Diagnosis Inspection 1

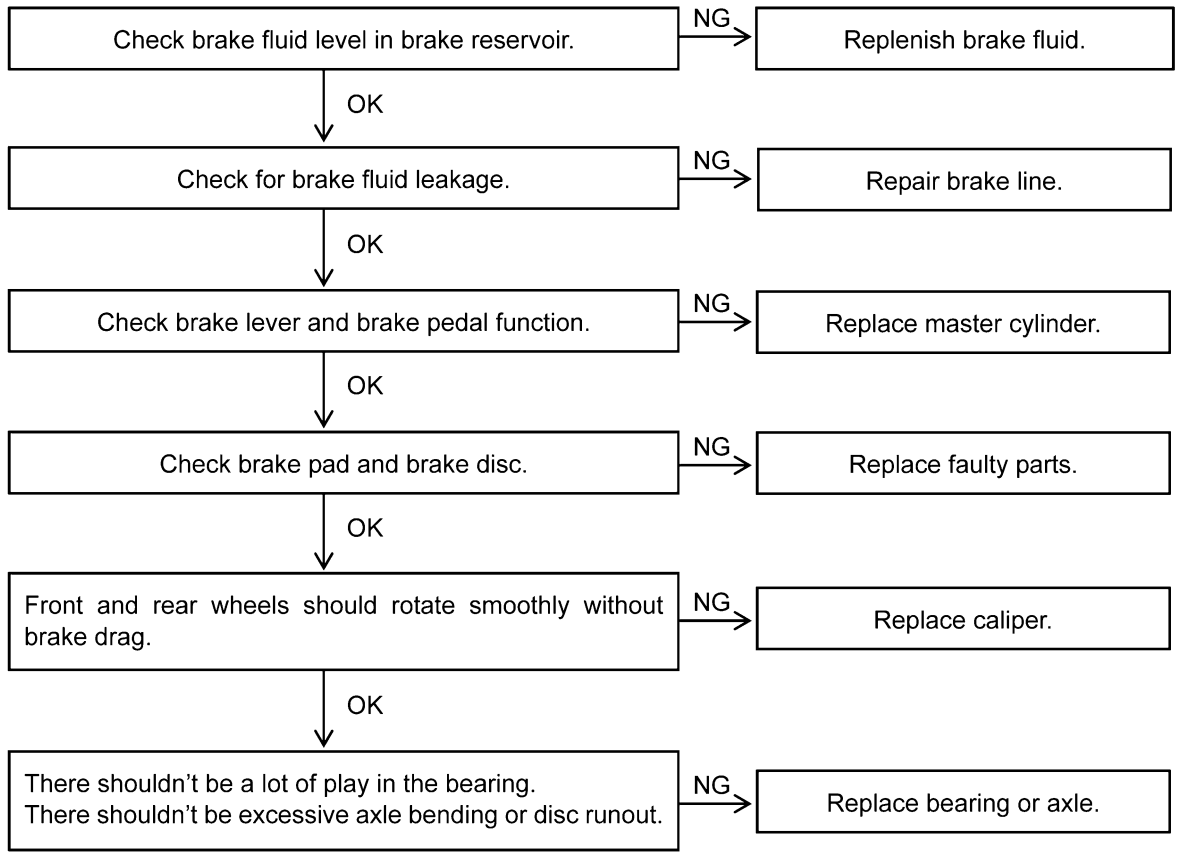

Anti-Lock Brake System

Pre-Diagnosis Inspection 2

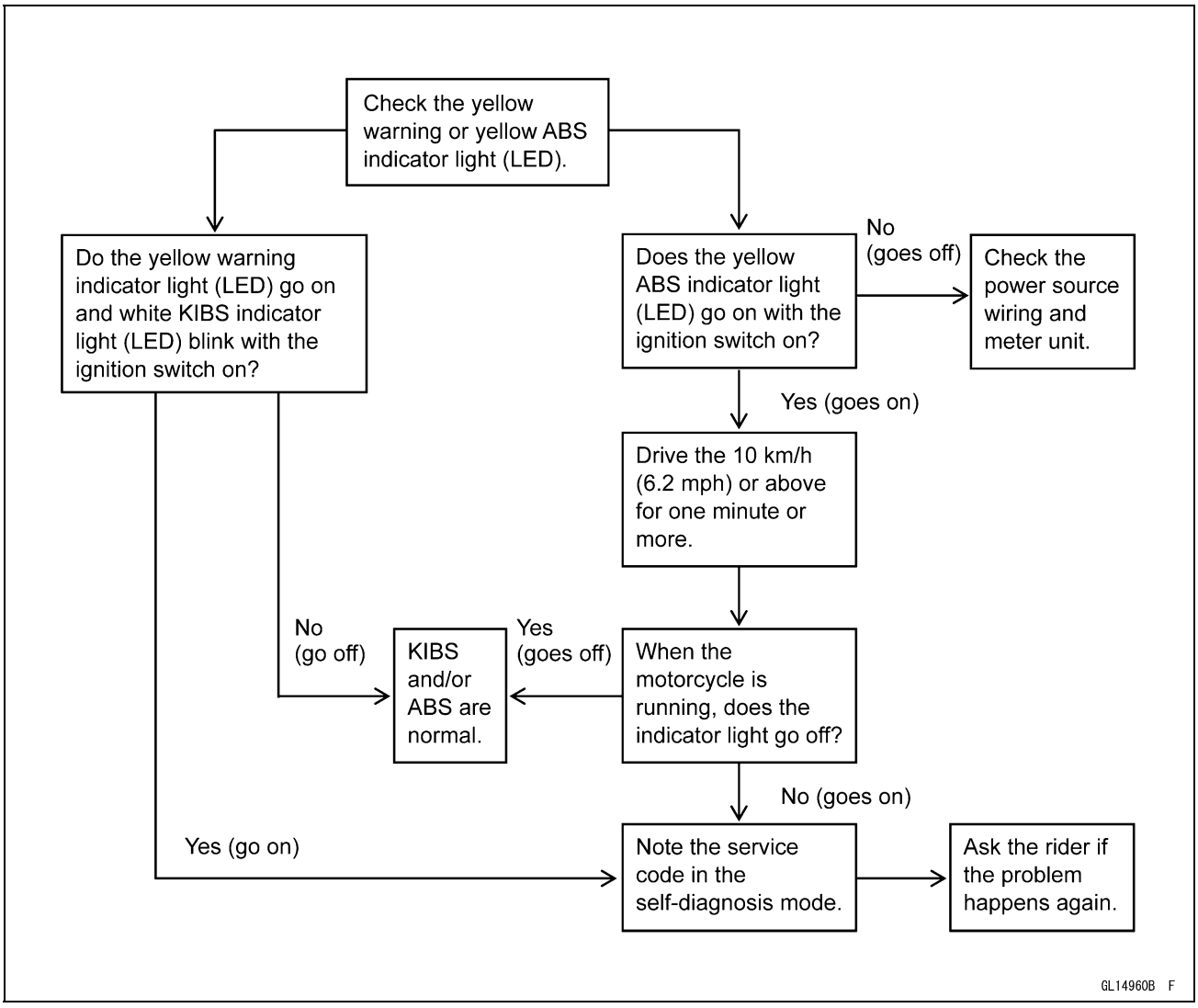

Self-diagnosis Outline

Refer to the Self-Diagnosis System chapter for the self-diagnosis or service code.

Anti-Lock Brake System

ABS and KIBS Indicator Lights (LED) Inspection

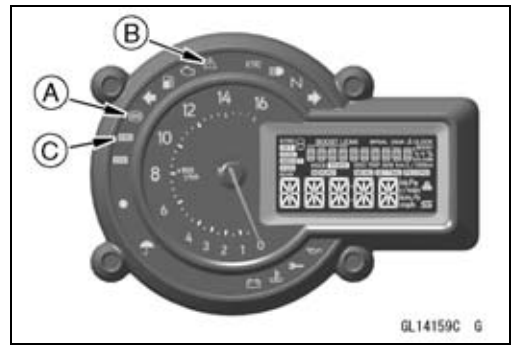

○In this model, the yellow ABS indicator light (LED) [A], yellow warning indicator light (LED) [B] and white KIBS indicator light (LED) [C] go on or blink by the data sent from the ABS hydraulic unit.

● Refer to the Meter Unit Inspection in the Electrical System chapter.

Yellow ABS Indicator Light (LED), Yellow Warning Indicator Light (LED) and White KIBS Indicator Light (LED) Function

Status	Brake Condition	Yellow ABS Indicator Light (LED)	Yellow Warning Indicator Light (LED)	White KIBS Indicator Light (LED)
Normal	KIBS	Goes off	Goes off	Goes off
Engine information communication error	ABS	Goes on	Goes on	Blinks
Battery voltage decreases	Low voltage ABS*	Blinks	Goes off	Goes off
ABS error	Normal brake	Goes on	Goes off	Goes off

*: The mode of “Low voltage ABS” controls ABS while reducing the load to the battery.

NOTE

○*When the yellow ABS indicator light (LED) is blinking, the ABS has been in the low voltage mode (insufficient battery voltage). When it is in the low voltage mode, the KIBS system does not function, but the ABS functions. To recover the KIBS system, charge the battery. (see Refreshing Charge in the Electrical System chapter).*

ABS Hydraulic Unit Removal



NOTICE

The ABS hydraulic unit [A] has been adjusted and set with precision at the factory. Therefore, it should be handled carefully, never struck sharply, as with a hammer, or allowed to fall on a hard surface.
Be careful not to get water or mud on the ABS hydraulic unit.

● Drain the brake fluid from the front and rear brake lines.

○Drain the brake fluid through the bleed valve by pumping the brake lever and pedal.

● Remove:
Right Inner Cover (see Inner Cover Removal in the Frame chapter)
Right Tank Cover (see Tank Cover Removal in the Frame chapter)
Right Middle Fairing (see Middle Fairing Removal in the Frame chapter)

Anti-Lock Brake System

- Clean the ABS hydraulic unit.

NOTICE
Clean all fittings on the ABS hydraulic unit and the rear master cylinder because dirt around the banjo bolts could contaminate the brake fluid in the line during removal/installation. **Spread over a shop towel around the ABS hydraulic unit before removing the brake line so that brake fluid does not leak on the parts.**

- Remove the crankshaft sensor lead connector from the bracket.
- Remove:
  Brake Hose Banjo Bolts (L = 32.3 mm) [A]
  Brake Hose Banjo Bolt (L = 20.8 mm) [B]

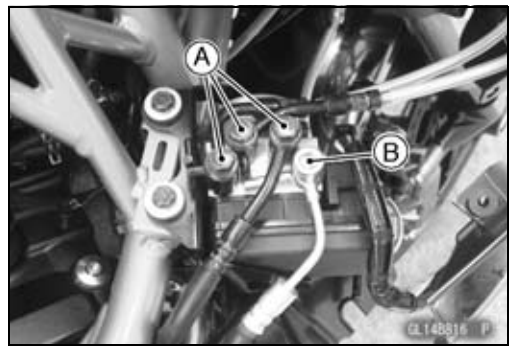

NOTICE
Brake fluid quickly damages painted plastic surfaces; any spilled fluid should be completely washed away immediately.

- Pull the lever [A] to disconnect the ABS hydraulic unit connector.
- Remove the bolts [B].
- Remove the ABS hydraulic unit [C] together with the bracket.

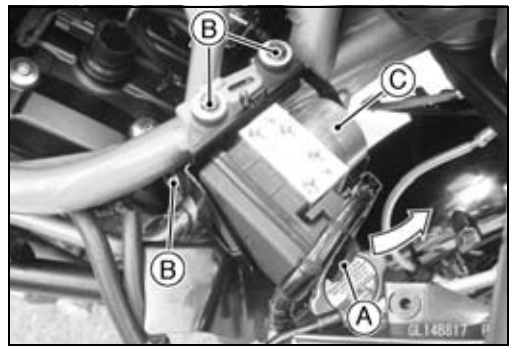

- Remove the bolts [A] and bracket.

NOTICE
The ABS hydraulic unit has been adjusted and set with precision at the factory. Do not try to disassemble and repair the ABS hydraulic unit.

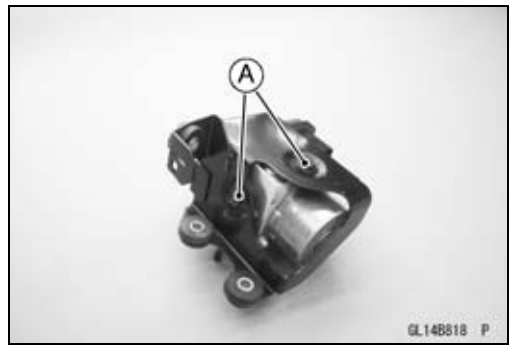

ABS Hydraulic Unit Installation

NOTICE
Brake fluid quickly damages painted plastic surfaces; any spilled fluid should be completely washed away immediately.

Anti-Lock Brake System

- Install the ABS hydraulic unit together with the bracket, and tighten the bolts.
- Pull the lever [A] to connect the ABS hydraulic unit connector [B].
- Replace the washers that are on each side of pipe fitting with new ones.
- Install the brake hoses (see Cable, Wire, and Hose Routing section in the Appendix chapter).
- Tighten:

Torque - Brake Hose Banjo Bolts: 25 N·m (2.5 kgf·m, 18 ft·lb)

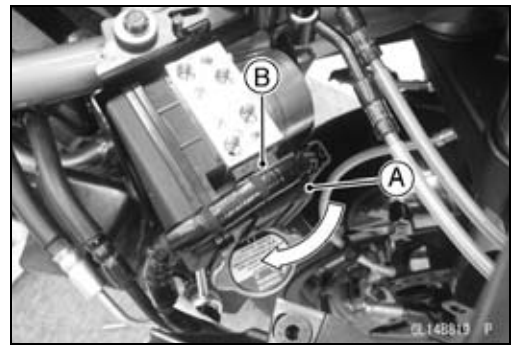

- Bleed the brake line (see Brake Line Bleeding).
- Check the brake for good braking power, no brake drag, and no fluid leakage.
- Install the removed parts (see appropriate chapters).

ABS Hydraulic Unit Inspection

- Remove the ABS hydraulic unit (see ABS Hydraulic Unit Removal).
- Visually inspect the connector terminals [A].

★Replace the ABS hydraulic unit or main harness if either of the terminals are cracked, bent, or otherwise damaged.

★If the ABS hydraulic unit connector is clogged with mud or dust, blow it off with compressed air.

- Visually inspect the ABS hydraulic unit.

★Replace the ABS hydraulic unit if any of them are cracked, or otherwise damaged.

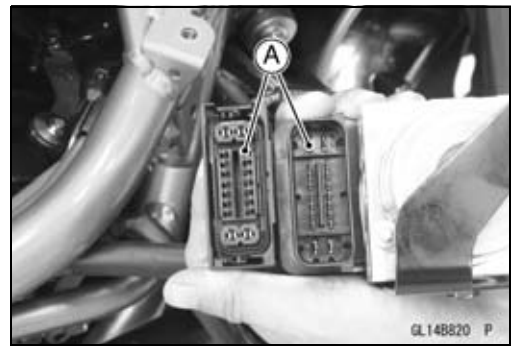

Front Wheel Rotation Sensor Removal

NOTICE

The wheel rotation sensor should be handled carefully, never struck sharply, as with a hammer, or allowed to fall on a hard surface since the wheel rotation sensor is precision made. Be careful not to get water or mud on the wheel rotation sensor.
Do not try to disassemble or repair the wheel rotation sensor.

- Remove:
  Right Middle Fairing (see Middle Fairing Removal in the Frame chapter)
- Open the clamps [A].
- Disconnect the front wheel rotation sensor lead connector [B].

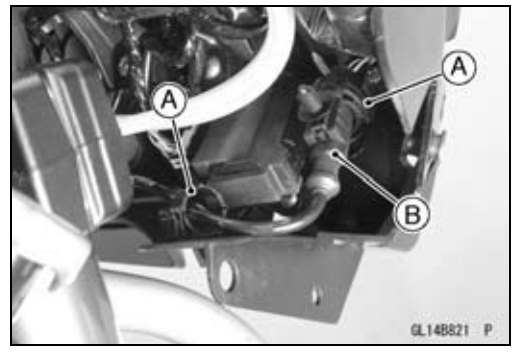

- Clear the sensor lead from the clamps [A].
- Remove:
  Bolt [B]
  Front Wheel Rotation Sensor [C]

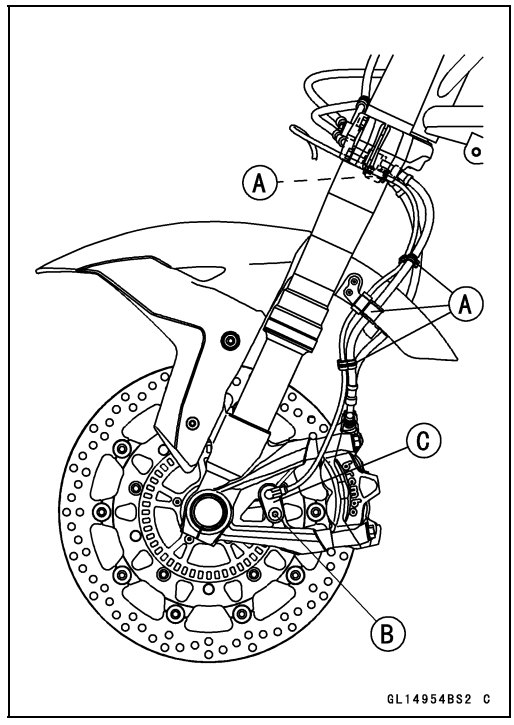

Front Wheel Rotation Sensor Installation

- Installation is the reverse of removal.
- Run the lead correctly (see Cable, Wire, and Hose Routing section in the Appendix chapter).

Rear Wheel Rotation Sensor Removal

NOTICE
The wheel rotation sensor should be handled carefully, never struck sharply, as with a hammer, or allowed to fall on a hard surface since the wheel rotation sensor is precision made. Be careful not to get water or mud on the wheel rotation sensor. **Do not try to disassemble or repair the wheel rotation sensor.**

- Remove:
  Fuel Tank (see Fuel Tank Removal in the Fuel System (DFI) chapter)
- Remove the oxygen sensor lead connector [A] from the bracket [B].
- Remove the bolt [C].
- Disconnect the rear wheel rotation sensor lead connector [D].

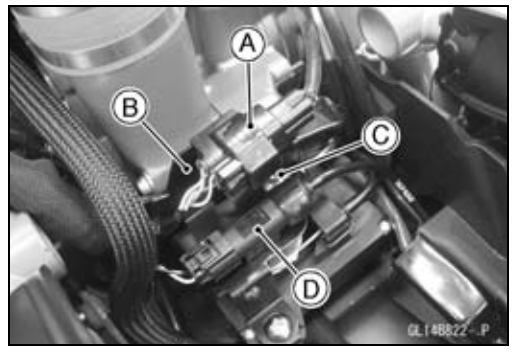

Anti-Lock Brake System

- Remove:
  Mud Guard (see Mud Guard Removal in the Frame chapter)
  Rear Fender (see Rear Fender Removal in the Frame chapter)
  Bolts [A]
- Clear the sensor lead from the clamps [B].

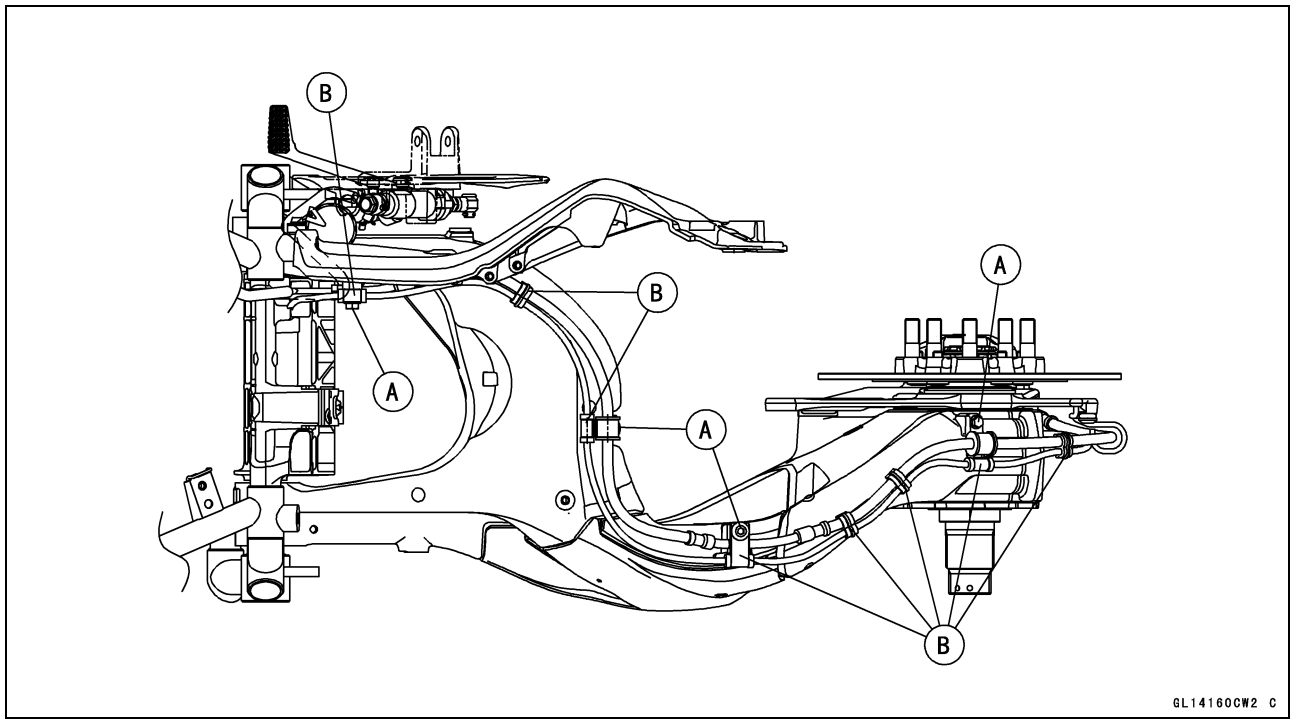

- Remove:
  Bolt [A]
  Rear Wheel Rotation Sensor [B]
  Spacer

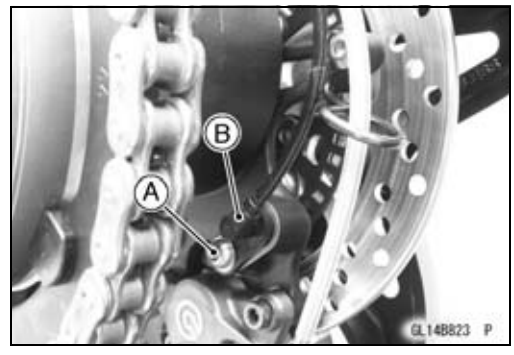

Rear Wheel Rotation Sensor Installation

- Installation is the reverse of removal.
- Run the lead correctly (see Cable, Wire, and Hose Routing section in the Appendix chapter).

Anti-Lock Brake System

Wheel Rotation Sensor Inspection

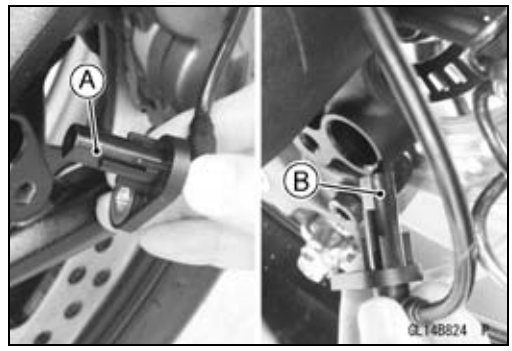

- Remove the front wheel rotation sensor [A] from the front fork.
- Remove the rear wheel rotation sensor [B] from the rear caliper holder.
- Visually inspect the wheel rotation sensors.

★Replace the wheel rotation sensor if it is cracked, bent, or otherwise damaged.

Wheel Rotation Sensor Air Gap Inspection



- Raise the front/rear wheel off the ground (see Front/Rear Wheel Removal in the Wheels/Tires chapter).
- Measure the air gap between the sensor and sensor rotor at several points by turning the wheel slowly.
  Thickness Gauge [A]

Wheel Rotation Sensor Air Gap
Standard 0.4 ~ 1.6 mm (0.02 ~ 0.06 in.)

NOTE

○ *The front wheel rotation sensor air gap cannot be adjusted.*

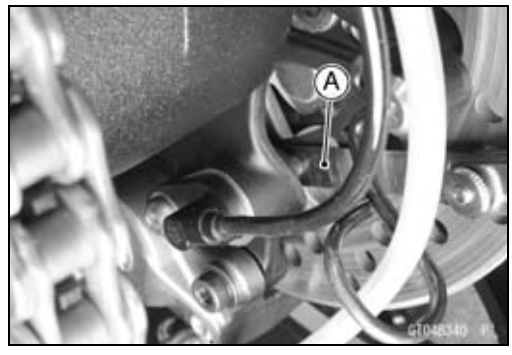

★For front wheel rotation sensor, if the air gap is not within the specification, inspect the front hub bearing (see Front Hub Bearing Inspection in the Wheels/Tires chapter), sensor installation condition and sensor (see Wheel Rotation Sensor Inspection).

★For rear wheel rotation sensor, if the air gap is not within the specification, adjust the air gap with the spacer.

Adjustment Spacers

Thickness	Part Number
0.5 mm (0.020 in.)	92026-0789
1.0 mm (0.039 in.) (STD)	92026-0790
1.5 mm (0.059 in.)	92026-0791

★For rear wheel rotation sensor, if the air gap can not be adjusted by spacer, inspect the bearing housing bearing (see Bearing Housing Bearing Inspection in the Final Drive chapter), sensor installation condition and sensor (see Wheel Rotation Sensor Inspection).

Anti-Lock Brake System

Wheel Rotation Sensor Rotor Inspection

- Visually inspect the wheel rotation sensor rotor.

★If the rotor is deformed or damaged (chipped teeth [A]), replace the sensor rotor with a new one.

★If there is iron or other magnetic deposits [B], remove the deposits.

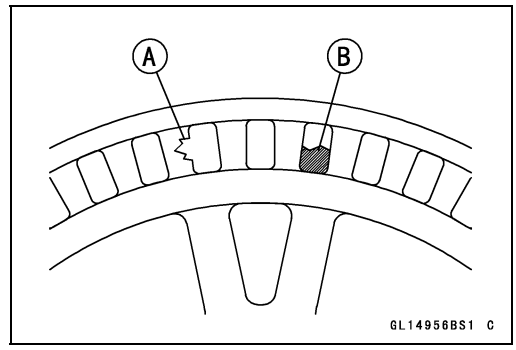

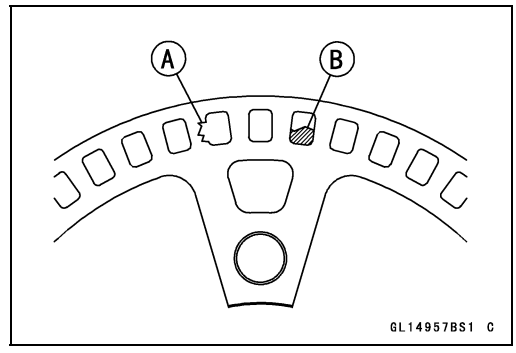

ABS Solenoid Valve Relay Fuse (15 A) Removal

- Refer to the Fuse Box Fuse Removal in the Electrical System chapter.

ABS Motor Relay Fuse (25 A) Removal

- Refer to the Fuse Box Fuse Removal in the Electrical System chapter.

Fuse Installation

- If a fuse fails during operation, inspect the electrical system to determine the cause, and then replace it with a new fuse of proper amperage (see Fuse Installation in the Electrical System chapter).

Fuse Inspection

- Remove the fuses (see ABS Solenoid Valve Relay Fuse (15 A)/ABS Motor Relay Fuse (25 A) Removal).
- Refer to the Fuse Inspection in the Electrical System chapter.

Suspension

Table of Contents

Exploded View 13-2
Specifications 13-6
Special Tools 13-7
Front Fork 13-9
  Rebound Damping Force Adjustment 13-9
  Compression Damping Force Adjustment 13-9
  Spring Preload Adjustment 13-10
  Front Fork Removal (Each Fork Leg) 13-11
  Front Fork Installation (Each Fork Leg) 13-12
  Front Fork Oil Change 13-13
  Front Fork Disassembly 13-16
  Front Fork Assembly 13-17
  Inner Tube Inspection 13-18
  Dust Seal Inspection 13-19
  Spring Tension Inspection 13-19
Rear Shock Absorber 13-20
  Rebound Damping Force Adjustment 13-20
  Compression Damping Force Adjustment 13-21
  Spring Preload Adjustment 13-21
  Rear Shock Absorber Removal 13-21
  Rear Shock Absorber Installation 13-22
  Rear Shock Absorber Inspection 13-22
  Rear Shock Absorber Scrapping 13-22
Swingarm 13-23
  Swingarm Removal 13-23
  Swingarm Installation 13-23
  Swingarm Bearing Removal 13-24
  Swingarm Bearing Installation 13-25
  Swingarm Bearing, Sleeve Inspection 13-25
  Swingarm Bearing Lubrication 13-26
  Chain Guide Inspection 13-26
Tie-Rod, Rocker Arm 13-27
  Tie-Rod Removal 13-27
  Tie-Rod Installation 13-27
  Rocker Arm Removal 13-28
  Rocker Arm Installation 13-29
  Tie-Rod and Rocker Arm Bearing Removal 13-30
  Tie-Rod and Rocker Arm Bearing Installation 13-30
  Rocker Arm/Tie-Rod Bearing, Sleeve Inspection 13-31
  Rocker Arm/Tie-Rod Bearing Lubrication 13-31

Exploded View

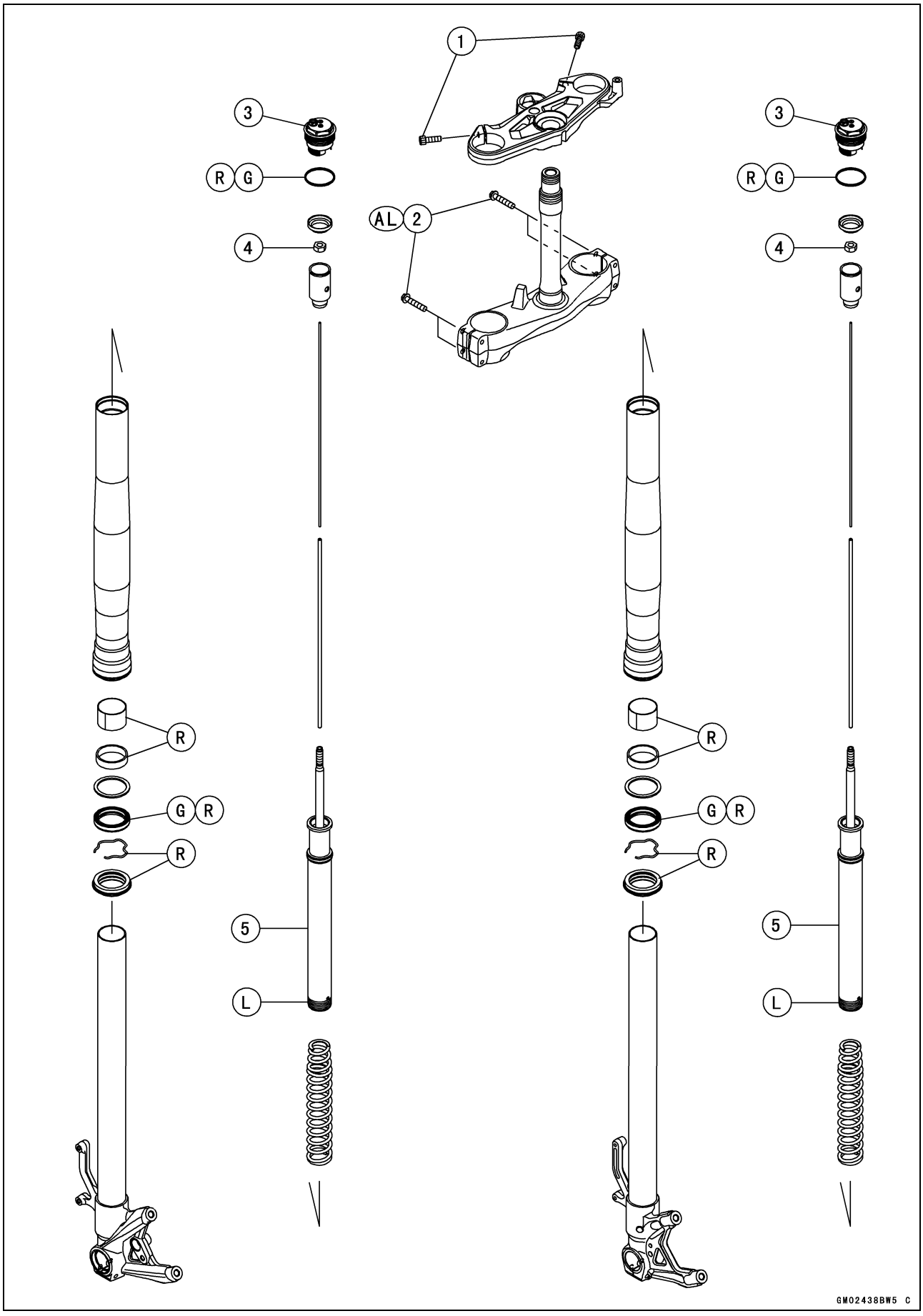

Exploded View

No.	Fastener	Torque			Remarks
		N·m	kgf·m	ft·lb	
1	Upper Front Fork Clamp Bolts	20	2.0	15	
2	Lower Front Fork Clamp Bolts	23	2.3	17	AL
3	Front Fork Top Plugs	22.5	2.29	16.6	
4	Piston Rod Nuts	15	1.5	11	
5	Cylinder Unit	60	6.1	44	L

AL: Tighten the two clamp bolts alternately two times to ensure even tightening torque.
G: Apply grease.
L: Apply a non-permanent locking agent (TB1344N or equivalent).
R: Replacement Parts

Exploded View

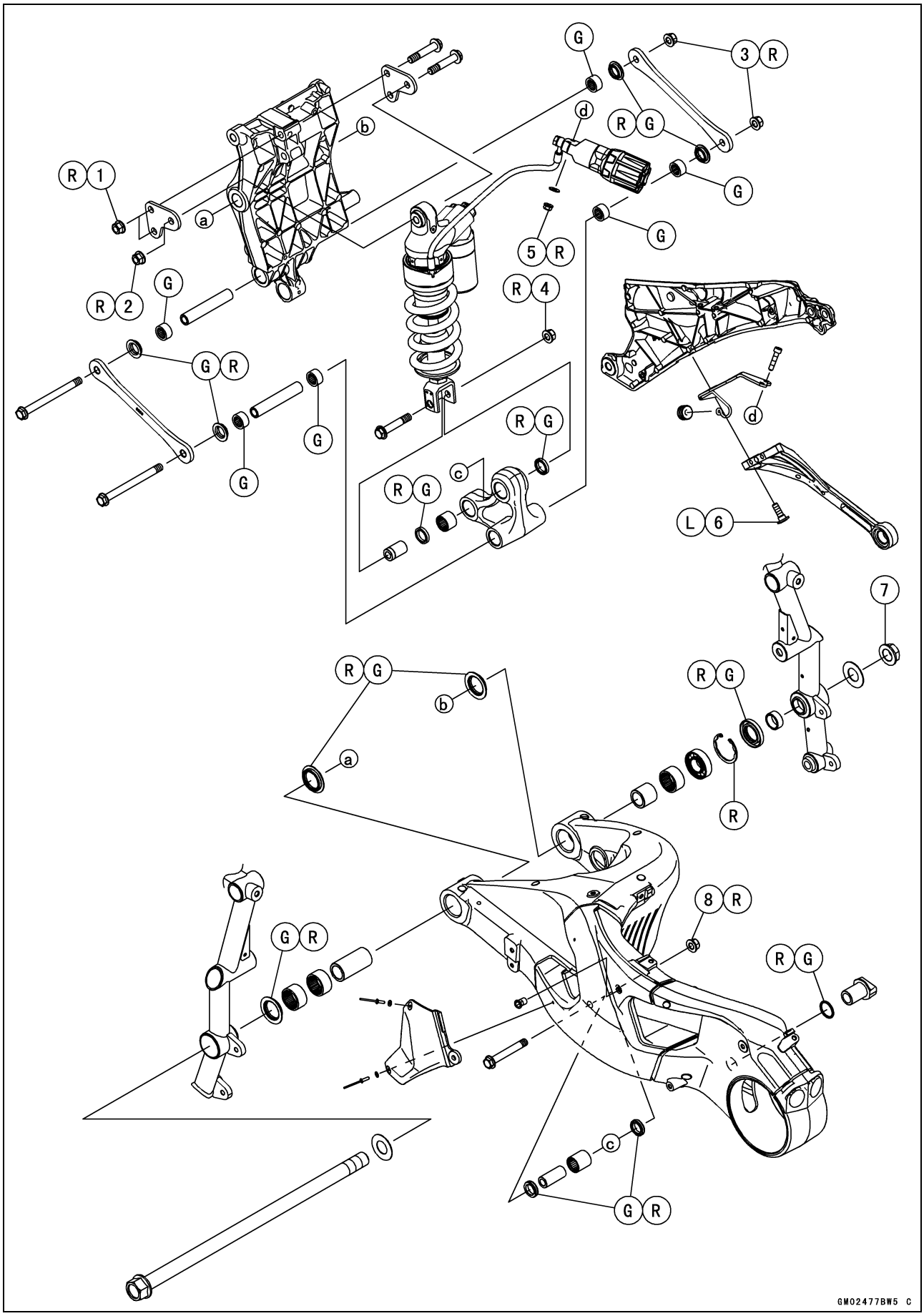

Exploded View

No.	Fastener	Torque			Remarks
		N·m	kgf·m	ft·lb	
1	Rear Shock Absorber Bracket Nuts	34	3.5	25	R
2	Upper Rear Shock Absorber Nut	34	3.5	25	R
3	Tie-Rod Nuts	34	3.5	25	R
4	Lower Rear Shock Absorber Nut	34	3.5	25	R
5	Spring Preload Adjuster Mounting Nuts	10	1.0	89 in·lb	R
6	Muffler Body Stay Bolts	25	2.5	18	L
7	Swingarm Pivot Shaft Nut	108	11.0	79.7	
8	Rocker Arm Nut	34	3.5	25	R

G: Apply grease.
R: Replacement Parts
L: Apply a non-permanent locking agent.

Specifications

Item	Standard
Front Fork (Per One Unit)	
Fork Inner Tube Diameter	ϕ43 mm (1.7 in.)
Air Pressure	Atmospheric pressure (Non-adjustable)
Rebound Damper Setting	13 clicks from fully clockwise position
	(Usable Range) 0 ←→ 24 clicks
Compression Damper Setting	10 clicks from fully clockwise position
	(Usable Range) 0 ←→ 24 clicks
Fork Spring Preload Setting	10 turns in from fully counterclockwise position
	(Usable Range: 0 ←→ 15 turns in)
Suspension Oil	Kawasaki KHL 15-10 or equivalent
Amount	385 ±4 mL (13.0 ± 0.135 US oz.)
	(After disassembly and completely dry)
	Approx. 330 mL (11.2 US oz.) (When changing oil)
Fork Oil Level	116 ±2 mm (4.6 ±0.08 in.) (Fully compressed, without spring, below from top of inner tube)
Fork Spring Free Length	213 mm (8.39 in.) (Service Limit: 209 mm (8.23 in.))
Rear Shock Absorber	
Rebound Damper Setting	13 clicks counterclockwise from fully clockwise position
	(Usable Range: 0 ←→ 22 clicks)
Compression Damper Setting	15 clicks counterclockwise from fully clockwise position
	(Usable Range: 0 ←→ 22 clicks)
Spring Preload Setting	4 clicks clockwise from fully counterclockwise position
	(Usable Range: 0 ←→ 16 clicks)

Special Tools

Inside Circlip Pliers:
57001-143

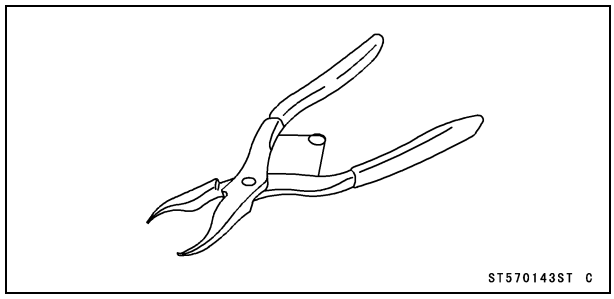

Fork Spring Stopper:
57001-1374

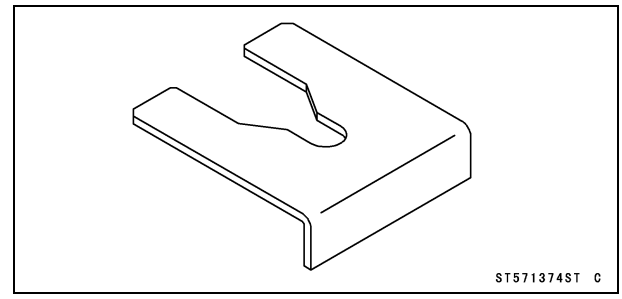

Oil Seal & Bearing Remover:
57001-1058

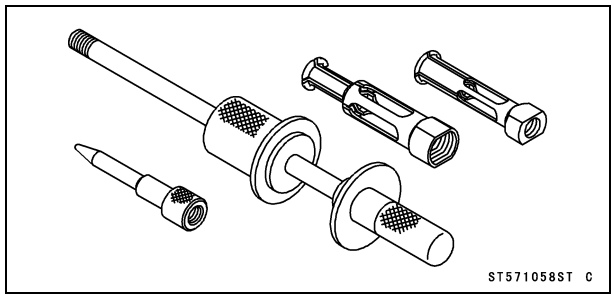

Fork Oil Seal Driver, ϕ43:
57001-1530

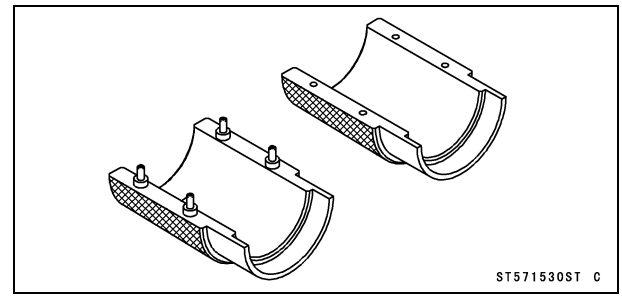

Bearing Driver Set:
57001-1129

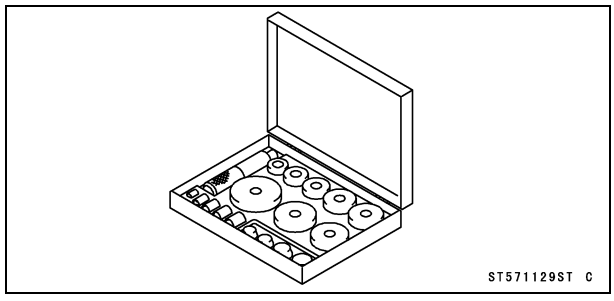

Needle Bearing Driver, ϕ28:
57001-1610

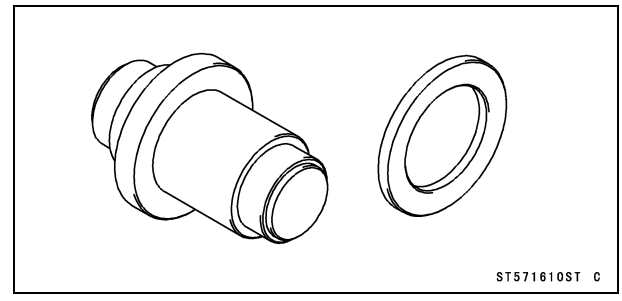

Fork Oil Level Gauge:
57001-1290

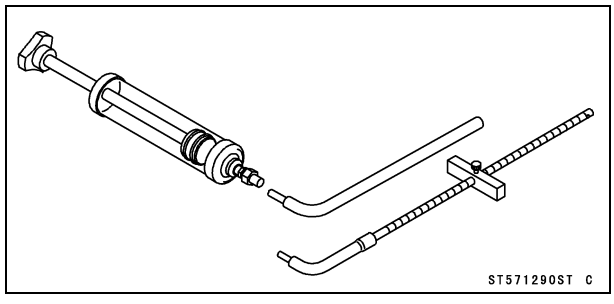

Needle Bearing Driver, ϕ20 & Spacer, ϕ28:
57001-1678

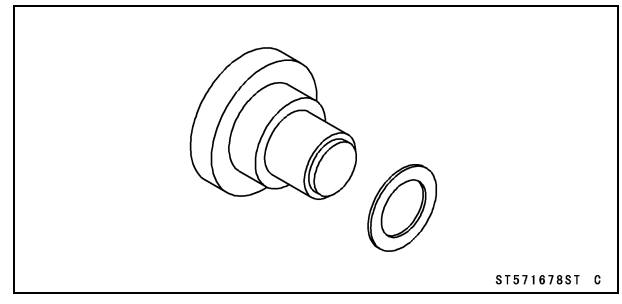

Fork Piston Rod Puller, M10 × 1.0:
57001-1298

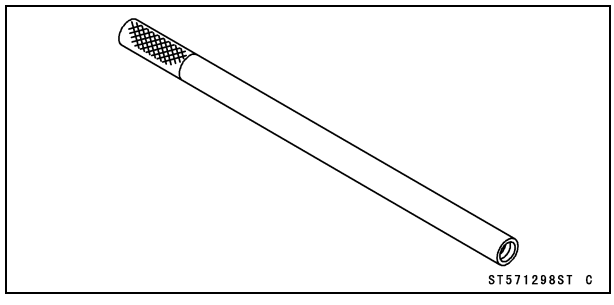

Fork Spring Compressor:
57001-1685

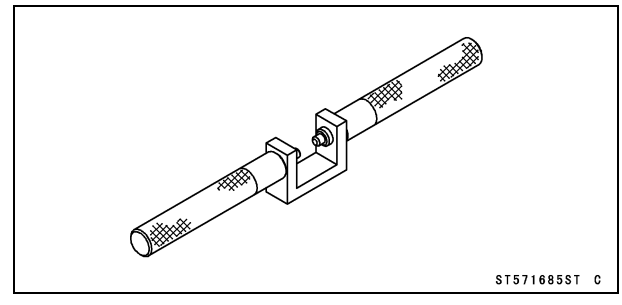

Special Tools

Fork Oil Seal Driver Weight, ϕ26 ~ ϕ46:
57001-1795

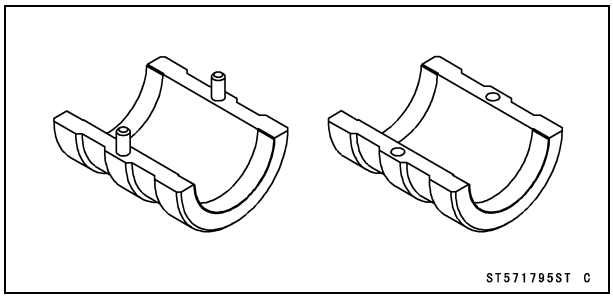

Fork Cylinder Wrench:
57001-1831

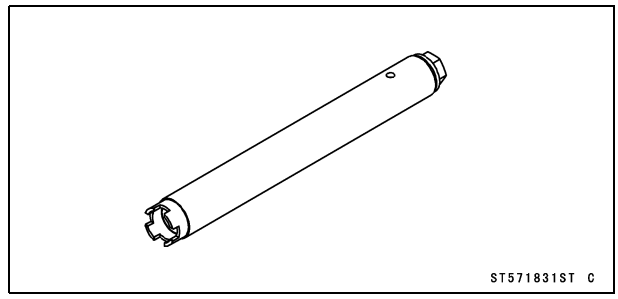

Fork Oil Seal Driver Attachment, ϕ36 ~ ϕ46:
57001-1798

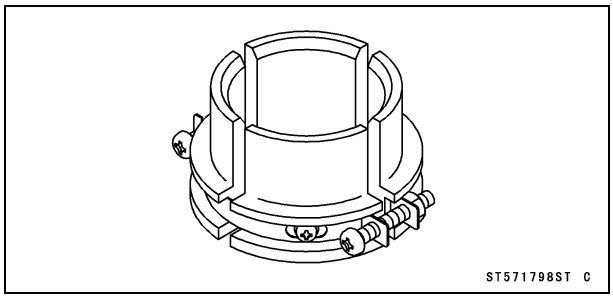

Top Plug Wrench, 37 mm:
57001-1835

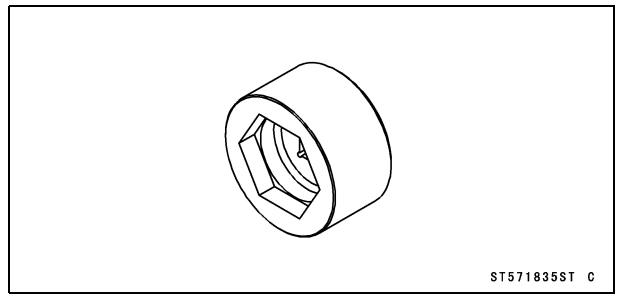

Front Fork

Rebound Damping Force Adjustment

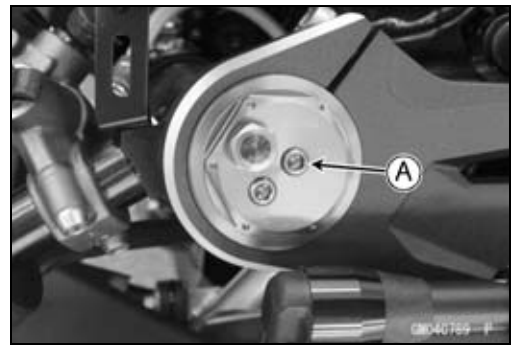

- To adjust the rebound damping force, turn the rebound damping force adjuster [A].

○The standard adjuster setting is the **13 clicks** from the fully clockwise position.

⚠ WARNING

If both adjusters are not adjusted equally, handling may be impaired and a hazardous condition may result. Be sure the adjusters are set equally.

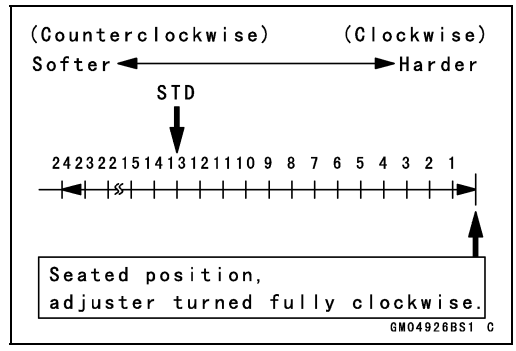

○The damping force can be left soft for average riding. But it should be adjusted harder for high speed riding. If the damping feels too soft or too stiff, adjust it in accordance with the following table.

Rebound Damping Force Adjustment

Adjuster Position	Damping Force	Setting	Load	Road	Speed
24	Weak	Soft	Light	Good	Low
↑	↑	↑	↑	↑	↑
↓	↓	↓	↓	↓	↓
0	Strong	Hard	Heavy	Bad	High

NOTICE

Do not force the rebound damping adjuster beyond the fully seated position, or the adjusting mechanism may be damaged.

Compression Damping Force Adjustment

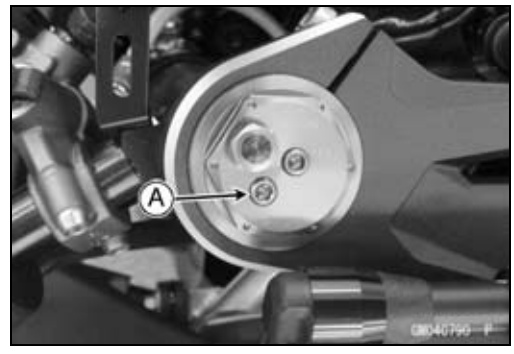

- To adjust the compression damping force, turn the compression damping force adjuster [A].

○The standard adjuster setting is the **10 clicks** from the fully clockwise position.

⚠ WARNING

If both adjusters are not adjusted equally, handling may be impaired and a hazardous condition may result. Be sure the adjusters are set equally.

Front Fork

○The damping force can be left soft for average riding. But it should be adjusted harder for high speed riding. If the damping feels too soft or too stiff, adjust it in accordance with the following table.

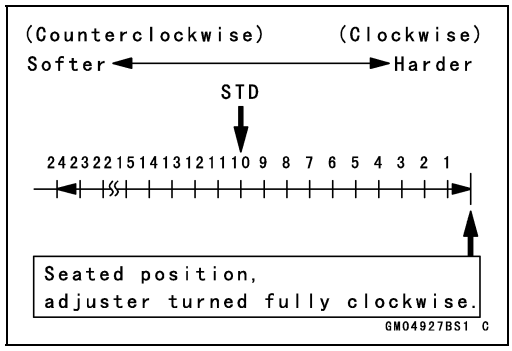

Compression Damping Force Adjustment

Adjuster Position	Damping Force	Setting	Load	Road	Speed
24	Weak	Soft	Light	Good	Low
↑	↑	↑	↑	↑	↑
↓	↓	↓	↓	↓	↓
0	Strong	Hard	Heavy	Bad	High

NOTICE

Do not force the compression damping adjuster beyond the fully seated position, or the adjusting mechanism may be damaged.

Spring Preload Adjustment

● To adjust the spring preload, turn the spring preload adjuster [A].

○The standard adjuster setting is the **10 turns in** from the fully counterclockwise position.

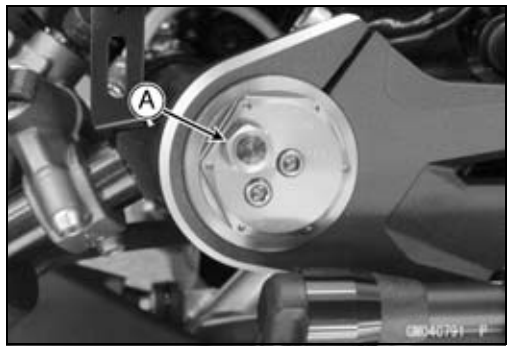

⚠ WARNING

If both adjusters are not adjusted equally, handling may be impaired and a hazardous condition may result. Be sure the adjusters are set equally.

○The spring preload can be left soft for average riding. But it should be adjusted harder for high speed riding. If the spring action feels too soft or too stiff, adjust it in accordance with the following table.

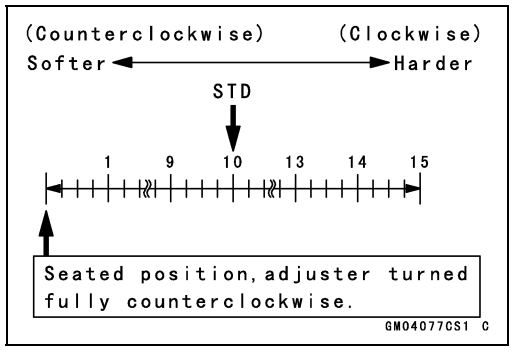

Spring Action

Adjuster Position	Damping Force	Setting	Load	Road	Speed
0	Weak	Soft	Light	Good	Low
↑	↑	↑	↑	↑	↑
↓	↓	↓	↓	↓	↓
15 turns in	Strong	Hard	Heavy	Bad	High

NOTICE

Do not force the spring preload adjuster beyond the fully seated position, or the adjusting mechanism may be damaged.

Front Fork

Front Fork Removal (Each Fork Leg)

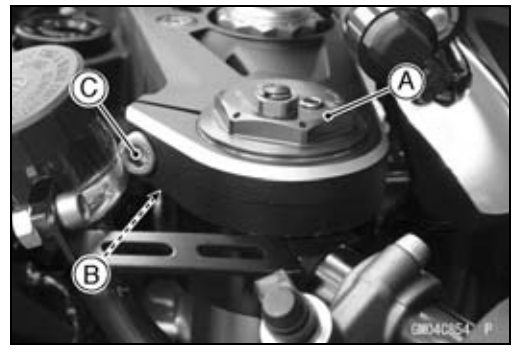

- Adjust the damping force and spring preload to weakest point.

★Loosen the front fork top plug [A] beforehand if the fork leg is to be disassembled.

Special Tool - Top Plug Wrench, 37 mm: 57001-1835

NOTE

○*Loosen the top plug after loosening the handlebar clamp bolt [B] and upper front fork clamp bolt [C].*

Left Side

- Remove the clutch fluid reservoir bracket bolt [A] to free the clutch fluid reservoir [B].

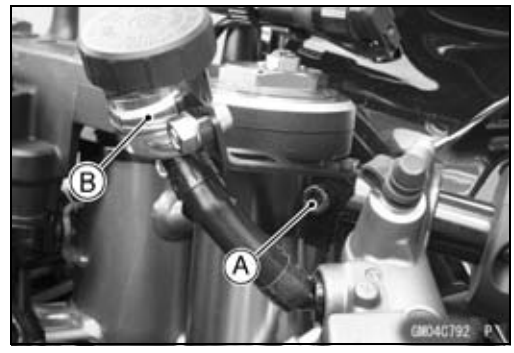

Right Side

- Remove the front brake fluid reservoir bracket bolt [A] to free the front brake fluid reservoir [B].



Each Fork Leg

- Loosen:
  Handlebar Clamp Bolt [A]
  Upper Front Fork Clamp Bolt [B]



- Loosen:
  Lower Front Fork Clamp Bolts [A]
- Remove:
  Front Wheel (see Front Wheel Removal in the Wheels/Tires chapter)
  Front Fender (see Front Fender Removal in the Frame chapter)
- With a twisting motion, work the fork leg [B] down and out.

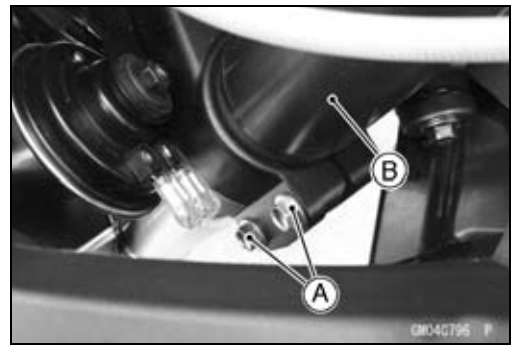

Front Fork

Front Fork Installation (Each Fork Leg)

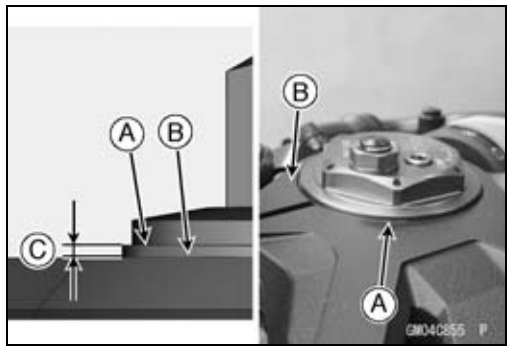

- Install the front fork so that the top end [A] of the outer tube protrudes from the steering stem head [B].
  0.5 mm (0.02 in.) [C]
- Tighten:

Torque - Lower Front Fork Clamp Bolts: 23 N·m (2.3 kgf·m, 17 ft·lb)

NOTE

○*Tighten the two lower front fork clamp bolts alternately two times to ensure even tightening torque.*

- Tighten the front fork top plug if necessary.

Special Tool - Top Plug Wrench, 37 mm: 57001-1835

Torque - Front Fork Top Plug: 22.5 N·m (2.29 kgf·m, 16.6 ft·lb)

NOTE

○*Tighten the front fork top plug before tightening the handlebar clamp bolt and upper front fork clamp bolt.*

- Loosen the lower front fork clamp bolt, and adjust the front fork installing position.
  Spring Preload Adjuster [A]
  60° [B]

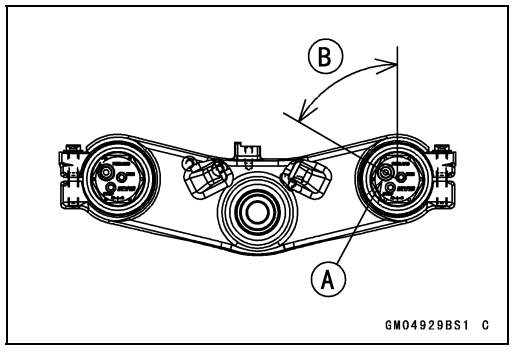

- Tighten the two lower front fork clamp bolts alternately two times to ensure even tightening torque.

Torque - Lower Front Fork Clamp Bolts: 23 N·m (2.3 kgf·m, 17 ft·lb)
Upper Front Fork Clamp Bolt: 20 N·m (2.0 kgf·m, 15 ft·lb)
Handlebar Clamp Bolt: 25 N·m (2.5 kgf·m, 18 ft·lb)

NOTE

○*Tighten the lower front fork clamp bolts first, next the upper front fork clamp bolts, last the handlebar clamp bolts.*

- Install the removed parts (see appropriate chapters).
- Adjust:
  Spring Preload (see Spring Preload Adjustment)
  Rebound Damping Force (see Rebound Damping Force Adjustment)
  Compression Damping Force (see Compression Damping Force Adjustment)

Front Fork

Front Fork Oil Change

- Remove the steering damper mounting bolt (right side) to free the electronic steering damper (see Electronic Steering Damper Removal in the Steering chapter).
- Put a clean cloth under the electronic steering damper.
- Remove the clutch or front brake fluid reservoir bracket bolt to free the clutch or front brake fluid reservoir.
- Loosen the handlebar clamp bolt and upper front fork clamp bolt (see Front Fork Removal (Each Fork Leg)).
- Record the adjuster positions of the rebound damping force and compression damping force, and then adjust both adjusters to the weakest positions.

- Using the top plug wrench [A], loosen the top plug.

  Special Tool - Top Plug Wrench, 37 mm: 57001-1835

- Remove the front fork (see Front Fork Removal (Each Fork Leg)).

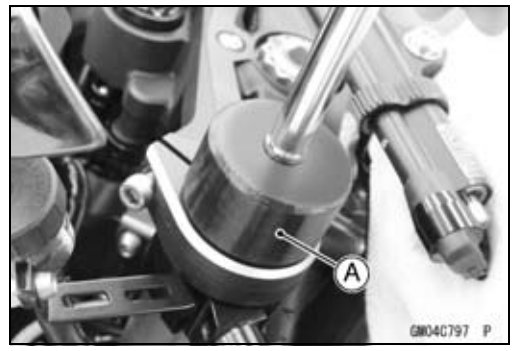

- Hold the inner tube lower end in a vise.
- Holding the spacer [A] with the fork spring compressor [B], compress the fork spring.

  Special Tool - Fork Spring Compressor: 57001-1685

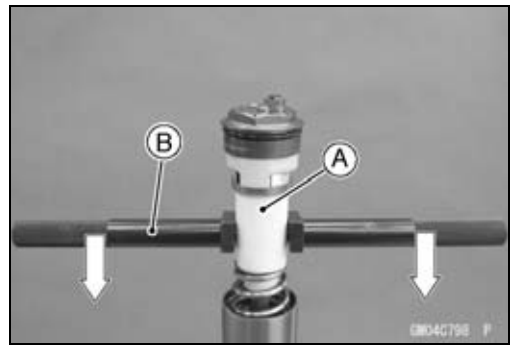

- Insert the fork spring stopper [A] under the piston rod nut [B].

  Special Tool - Fork Spring Stopper: 57001-1374

- Loosen the piston rod nut and remove the top plug assembly [C].

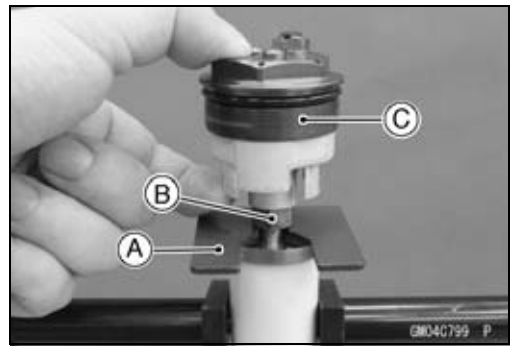

Front Fork

● Remove:
Rebound Damping Adjuster Rod (Inside) [A]
Compression Damping Adjuster Rod (Outside) [B]
Piston Rod Nut [C]

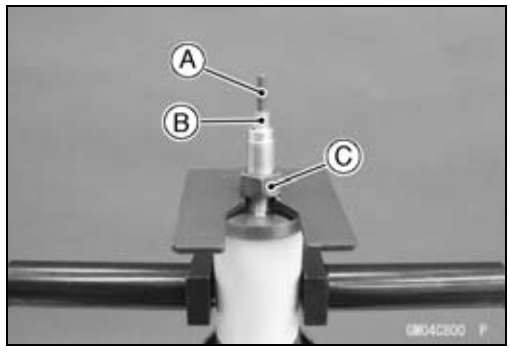

● Remove:
Special Tools
Guide [A]
Spacer [B]
Fork Spring [C]

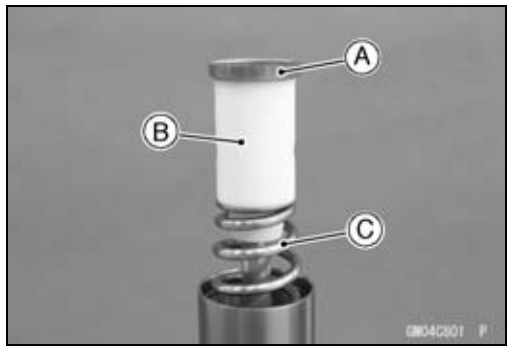

● Drain the fork oil into a suitable container.
○Using the piston rod puller [A], pump the piston rod [B] up and down at least ten times to expel the oil from the fork.

Special Tool - Fork Piston Rod Puller, M10 × 1.0: 57001 -1298

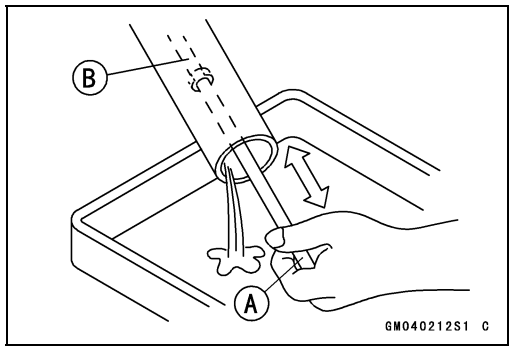

● Hold the fork tube upright, press the outer tube [A] and the piston rod all the way down.
● Pour in the type and amount of fork oil specified.
○Pour the fork oil to near the top end of the inner tube.

Suspension Oil - KHL15-10 (1 L): 44091-0004
KHL15-10 (4 L): 44091-0013

Amount (Per Side):
When changing oil: Approx. 330 mL (11.2 US oz.)
After disassembly and completely dry:
385 ±4 mL (13.0 ±0.135 US oz.)

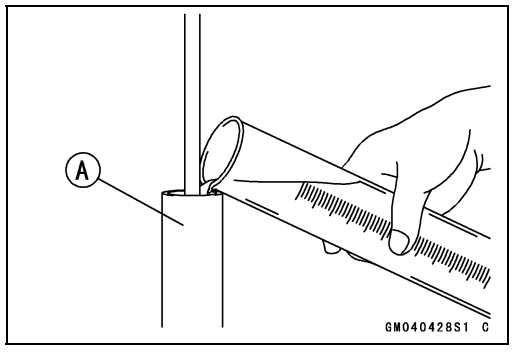

● Remove the piston rod puller.
● Raise the outer tube [A] about 130 mm (5.12 in.), and press the outer tube down slowly while covering the top end of the outer tube with a hand.
● Take the hand off slowly, and raise the outer tube again.
● Repeat the above procedure 2 ~ 3 times.

NOTE

○*Do not lift the outer tube 230 mm (9.06 in.) or more. The fork oil may spill out from the hole of the inner tube.*

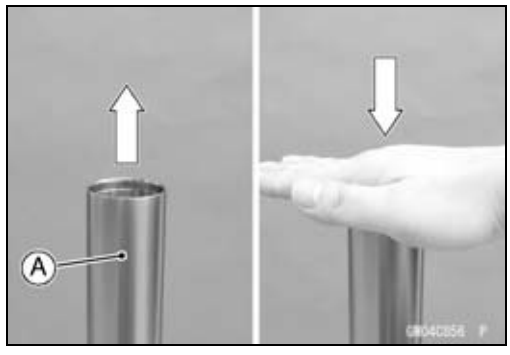

Front Fork

- Using the piston rod puller [A], move the piston rod [B] up and down more than ten times in order to expel all the air from the fork oil.

Special Tool - Fork Piston Rod Puller, M10 × 1.0: 57001 -1298

- Remove the piston rod puller.

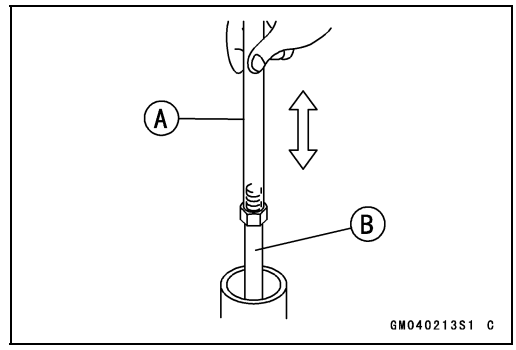

- Install:
  Compression Damping Adjuster Rod (Outside) [A]
  Rebound Damping Adjuster Rod (Inside) [B]
- Check that the length of rebound damping adjuster rod is about 12.6 mm (0.50 in.) [C].

★If the length is not correct, reinstall the compression damping adjuster rod and rebound damping adjuster rod.

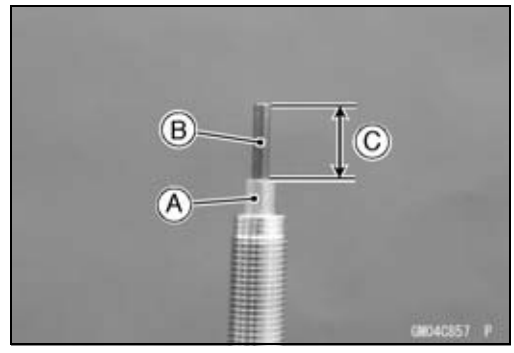

- Wait until the oil level settles.
- With the fork fully compressed, insert a tape measure or rod into the piston rod guide case [A], and measure the distance [B] from the top [C] of the outer tube [D] to the oil.

Oil Level (fully compressed)
Standard: 116 ±2 mm (4.6 ±0.08 in.)

NOTE

○*Fork oil level may also be measured using the fork oil level gauge [E].*

Special Tool - Fork Oil Level Gauge: 57001-1290

- Pull the handle slowly to pump out the excess oil until the oil no longer comes out.

★If no oil is pumped out, there is insufficient oil in the inner tube. Pour in enough oil, then pump out the excess oil as shown above.

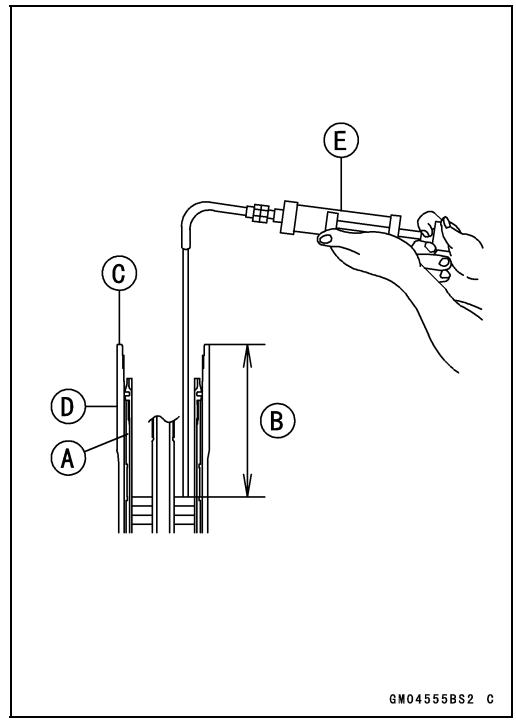

- Install the piston rod nut [A] so that the length from the rod end threads is 15 mm (0.59 in.) [B] or more.

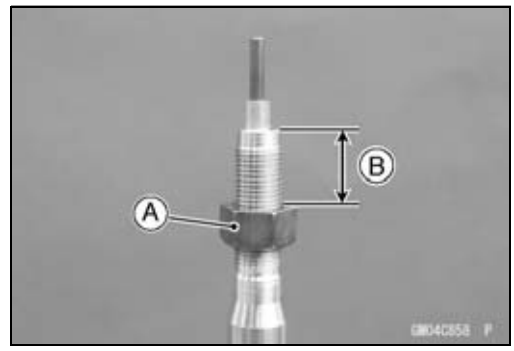

Front Fork

- Install the fork spring [A] with the smaller end [B] facing upward.
- Install:
  Spacer [C]
  Guide [D]

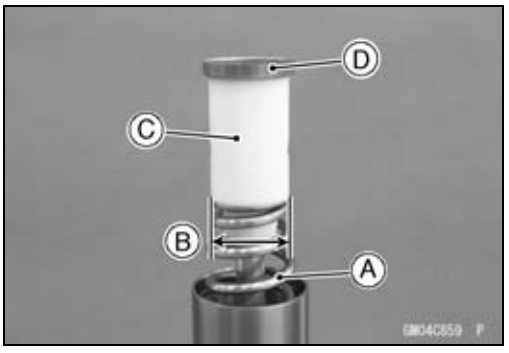

- Holding the spacer [A] with the fork spring compressor [B], compress the fork spring.

  Special Tool - Fork Spring Compressor: 57001-1685
- Insert the fork spring stopper [C] under the piston rod nut [D].

  Special Tool - Fork Spring Stopper: 57001-1374

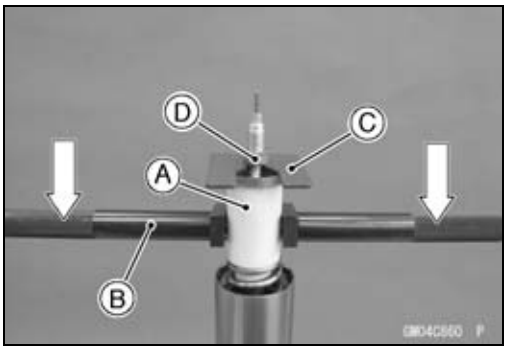

- Replace the O-ring [A] on the top plug with a new one.
- Apply grease to the O-ring.
- Screw in the top plug [B] until it stops onto the piston rod.
- Holding the top plug, tighten the piston rod nut [C] against the top plug.

  Torque - Piston Rod Nut: 15 N·m (1.5 kgf·m, 11 ft·lb)
- Remove the special tools.
- Raise the outer tube and screw the top plug into it.
- Install the front fork (see Front Fork Installation).

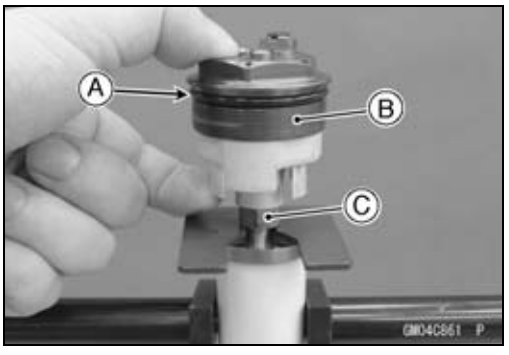

NOTE

○*After installing the front fork, adjust the spring preload and damping force correctly.*

Front Fork Disassembly

- Remove the front fork (see Front Fork Removal).
- Drain the fork oil (see Front Fork Oil Change).
- Hold the axle portion of the front fork in a vise [A].
- Unscrew the cylinder unit by using the fork cylinder wrench [B].

  Special Tool - Fork Cylinder Wrench: 57001-1831

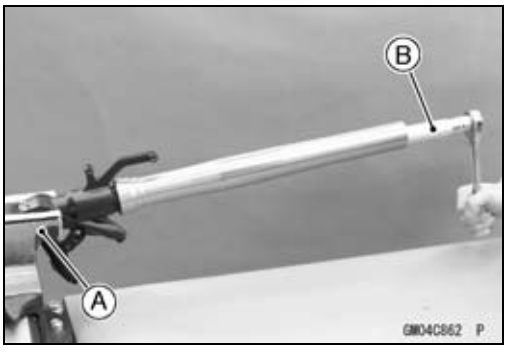

Front Fork

● Remove the cylinder unit [A] from the inner tube.
○Do not disassemble the cylinder unit.

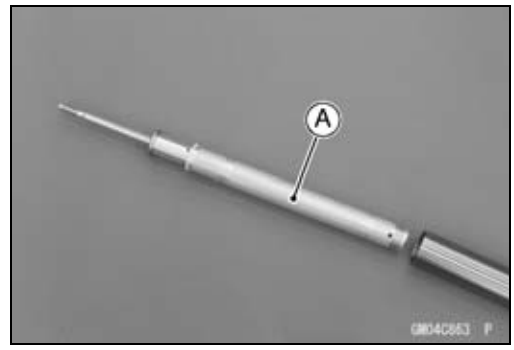

● Remove the dust seal [A] from the outer tube.
● Remove the circlip [B].
● Separate the outer tube from the inner tube.

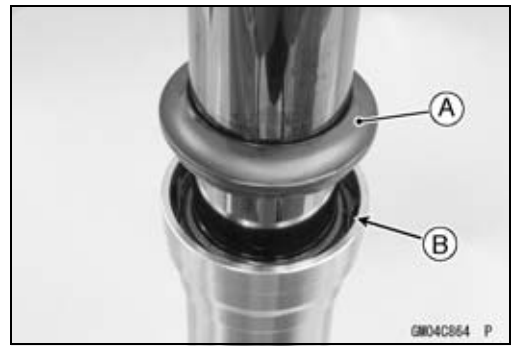

● Remove the following parts from the inner tube.
Slide Bushing [A]
Guide Bushing [B]
Washer [C]
Oil Seal [D]
Circlip [E]
Dust Seal [F]

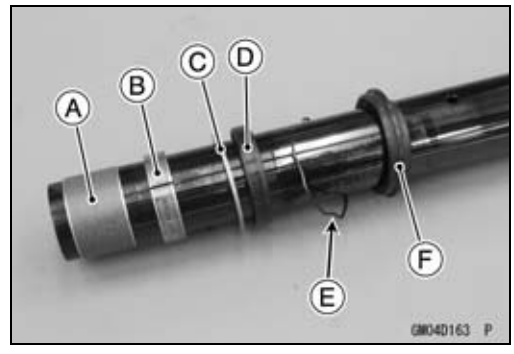

Front Fork Assembly

● Replace the following parts with new ones.
Slide Bushing
Guide Bushing
Oil Seal
Circlip
Dust Seal

● Apply grease to the oil seal lips.
● Install the following parts to the inner tube [A].
Dust Seal [B]
Circlip [C]
Oil Seal [D]
Washer [E]
Guide Bushing [F]
Slide Bushing [G]

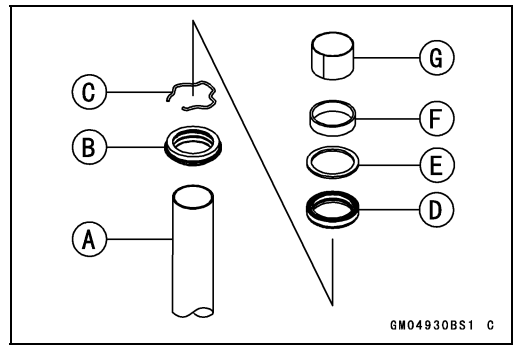

Front Fork

- Insert the inner tube to the outer tube.
- After installing the washer, install the oil seal [A] by using the fork oil seal driver [B].

Special Tools - Fork Oil Seal Driver, ϕ43: 57001-1530
or Fork Oil Seal Driver Weight, ϕ26 ~ ϕ46: 57001-1795
Fork Oil Seal Driver Attachment, ϕ36 ~ ϕ46: 57001-1798

- Install the circlip and dust seal.

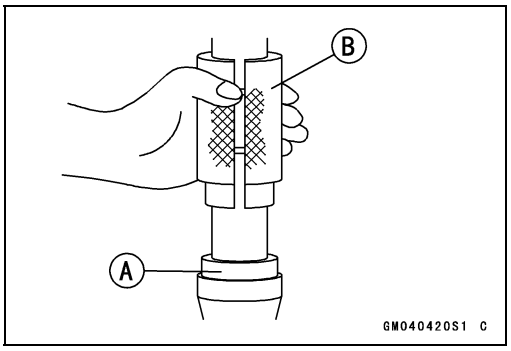

- Apply a non-permanent locking agent (TB1344N or equivalent) to the threads of the cylinder unit [A].
- Install the cylinder unit into the inner tube.

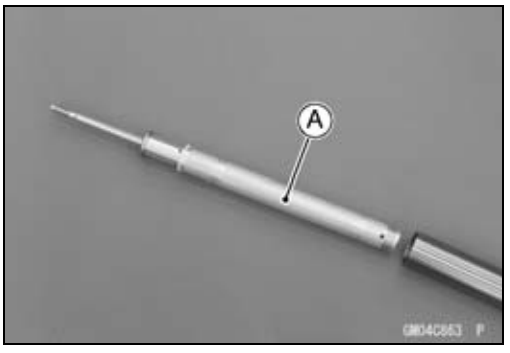

- Hold the axle portion of the front fork in a vise [A].
- Tighten the cylinder unit by using the fork cylinder wrench [B].

Special Tool - Fork Cylinder Wrench: 57001-1831

Torque - Cylinder Unit: 60 N·m (6.1 kgf·m, 44 ft·lb)

- Pour in the specified type of oil (see Front Fork Oil Change).

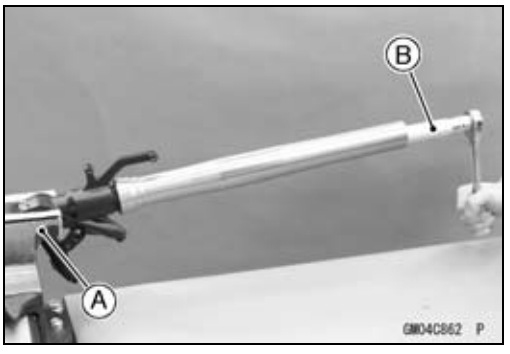

Inner Tube Inspection

- Visually inspect the inner tube [A].

★If there is any damage, replace the inner tube. Since damage to the inner tube damages the oil seal and dust seal, replace the oil seal and dust seal whenever the inner tube is replaced.

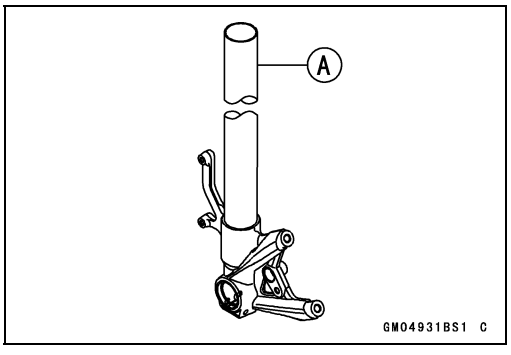

NOTICE
If the inner tube is badly bent or creased, replace it. Excessive bending, followed by subsequent straightening, can weaken the inner tube.

- Temporarily assemble the inner tube [A] and outer tube [B], and pump [C] them back and forth manually to check for smooth operation.

★If you feel binding or catching, the inner and outer tubes must be replaced.

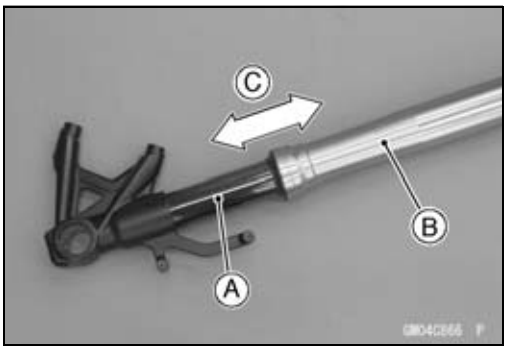

⚠ WARNING
A straightened inner or outer fork tube may fall in use, possibly causing an accident resulting in serious injury or death. Replace a badly bent or damaged inner or outer tube and inspect the other tube carefully before reusing it.

Front Fork

Dust Seal Inspection

- Inspect the dust seals [A] for any signs of deterioration or damage.

★Replace it if necessary.

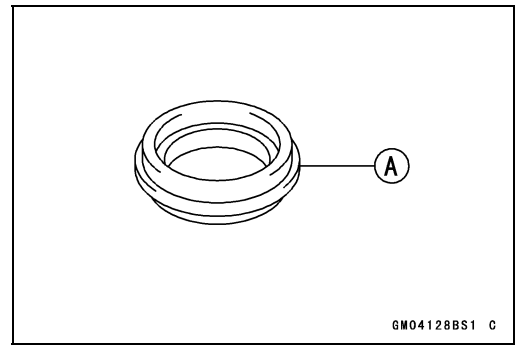

Spring Tension Inspection

- Since a spring becomes shorter as it weakens, check its free length [A] to determine its condition.

★If the spring of either fork leg is shorter than the service limit, it must be replaced. If the length of a replacement spring and that of the remaining spring vary greatly, the remaining spring should also be replaced in order to keep the fork legs balanced for motorcycle stability.

Spring Free Length

Standard: 213 mm (8.39 in.)

Service Limit: 209 mm (8.23 in.)

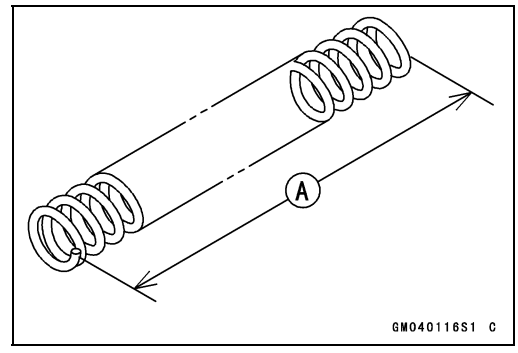

Rear Shock Absorber

⚠ WARNING

- **Adjusting the Öhlins TTX36 shock absorber outside the spring preload and damper adjuster usable range could effect suspension balance and result in an unsafe riding condition. Adjust the spring preload and the damping only within the adjustable usable range.**
- **When making spring preload and damping adjustments, change the adjuster only one click at a time and confirm the effect from the adjustment before making additional changes. Go back to the standard setting if necessary.**

Rebound Damping Force Adjustment

- To adjust the rebound damping force, turn the rebound damping force adjuster [A] to the desired position.

○The standard adjuster setting is the **13 clicks** from the fully clockwise position.



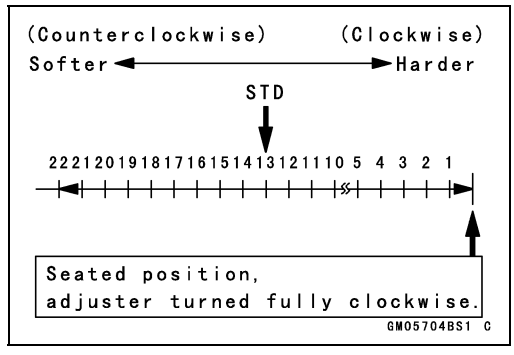

Rebound Damping Force Adjustment

Adjuster Position	Damping Force	Setting	Load	Road	Speed
22	Weak	Soft	Light	Good	Low
↑	↑	↑	↑	↑	↑
↓	↓	↓	↓	↓	↓
0	Strong	Hard	Heavy	Bad	High

NOTICE

Do not force the rebound damping adjuster beyond the fully seated position, or the adjusting mechanism may be damaged.

Rear Shock Absorber

Compression Damping Force Adjustment

- To adjust the compression damping force, turn the compression damping force adjuster [A] to the desired position.

○The standard adjuster setting is the **15 clicks** from the fully clockwise position.

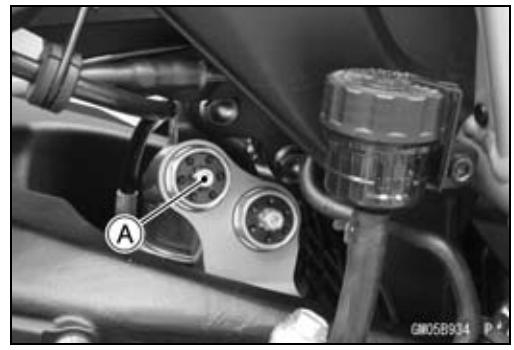

Compression Damping Force Adjustment

Adjuster Position	Damping Force	Setting	Load	Road
22	Weak	Soft	Light	Good
↑	↑	↑	↑	↑
↓	↓	↓	↓	↓
0	Strong	Hard	Heavy	Bad

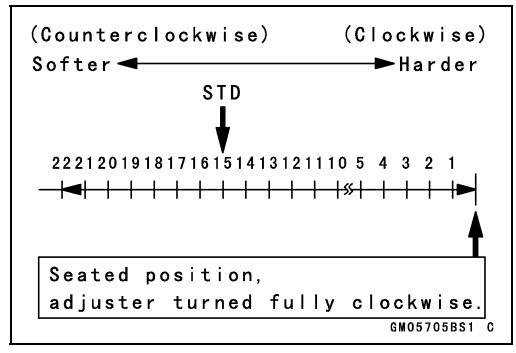

NOTICE

Do not force the compression damping adjuster beyond the fully seated position, or the adjusting mechanism may be damaged.

Spring Preload Adjustment

- To adjust the spring preload, turn in the adjuster [A] until you fee a click to the desired position.

○The standard adjuster setting is the **4 clicks** from the fully counterclockwise position.

★If the spring action feels too soft, adjust it.

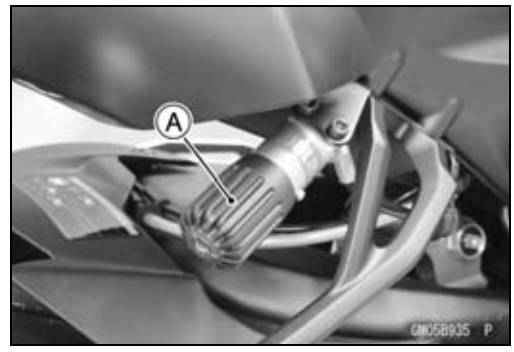

Spring Preload Adjustment

Adjuster Position	Damping Force	Setting	Load	Road	Speed
0	Weak	Soft	Light	Good	Low
↑	↑	↑	↑	↑	↑
↓	↓	↓	↓	↓	↓
16 clicks	Strong	Hard	Heavy	Bad	High

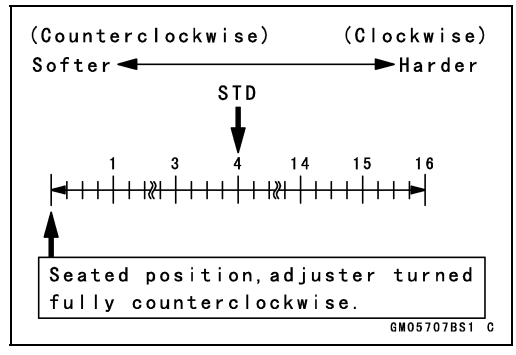

NOTICE

Do not force the spring preload adjuster beyond the fully seated position, or the adjusting mechanism may be damaged.

Rear Shock Absorber Removal

- Remove:
  Right Hip Support Cover Inner (see Hip Support Cover Removal in the Frame chapter)
  Spring Preload Adjuster Bolts [A], Nuts and Washers
- Free the adjuster cable [B] from the clamp [C].

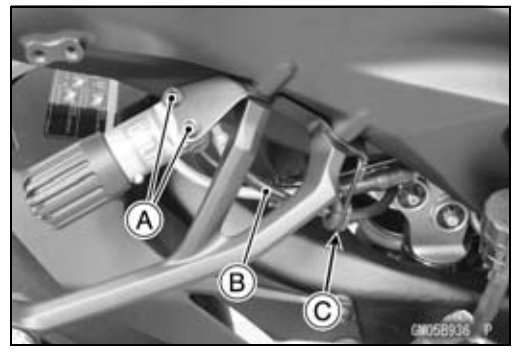

Rear Shock Absorber

- Loosen:
  Upper Rear Shock Absorber Bolt [A] and Nut
- Remove:
  Rocker Arm (see Rocker Arm Removal)
  Upper Rear Shock Absorber Bolt and Nut
- Remove the rear shock absorber [B] downward.

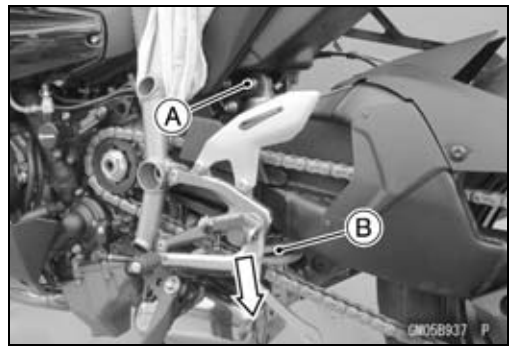

Rear Shock Absorber Installation

- Replace the rear shock absorber nuts and spring preload adjuster mounting nuts with new ones.
- Install the rear shock absorber, bolts, washers and nuts temporarily.
- Tighten:

Torque - Spring Preload Adjuster Mounting Nuts: 10 N·m (1.0 kgf·m, 89 in·lb)

- Install the rocker arm and tighten the nuts and bolts (see Rocker Arm Installation).

Rear Shock Absorber Inspection

- Remove the rear shock absorber (see Rear Shock Absorber Removal).
- Visually inspect the following items.
  Oil Leakage
  Crack or Dent

★If there is any damage to the rear shock absorber, replace it.

Rear Shock Absorber Scrapping

⚠ WARNING

Pressurized nitrogen may explode when heated. The shock contains nitrogen gas. To avoid an explosion, do not incinerate the shock body without first releasing the nitrogen.

- Remove the rear shock absorber (see Rear Shock Absorber Removal).
- Remove the Torx bolt [A].
- Drill the hole [B] of the reservoir tank using about 2 mm (0.08 in.) drillbit.

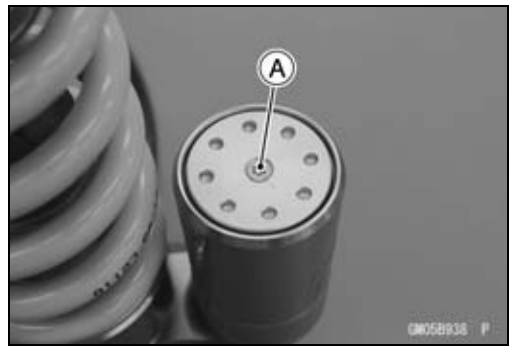

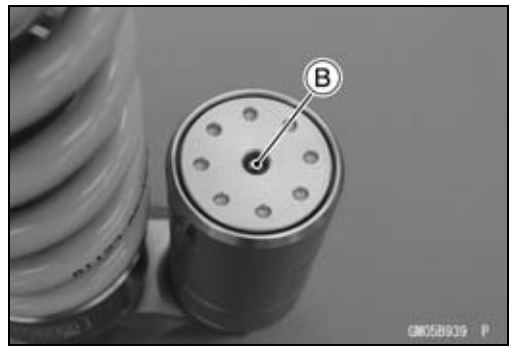

⚠ WARNING

Pressurized gas can cause injury. Do not point the drill toward your face or body.

Swingarm

Swingarm Removal

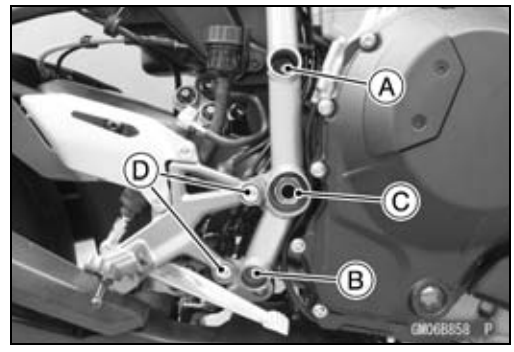

- Loosen:
  Swingarm Mounting Plate Nut (Upper) [A]
  Swingarm Mounting Plate Bolt (Lower) [B]
  Swingarm Pivot Shaft Nut [C]
- Remove:
  Footpeg Bracket Bolts [D]

- Remove:
  Engine Sprocket (see Engine Sprocket Removal in the Final Drive chapter)
  Rocker Arm (see Rocker Arm Removal)
  Mud Guard (see Mud Guard Removal in the Frame chapter)
  Rear Axle and Bearing Housing (see Bearing Housing in the Final Drive chapter)

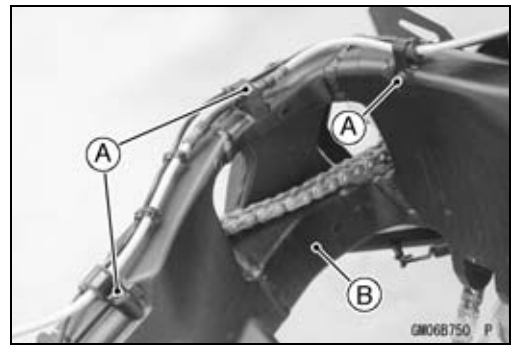

- Remove the bolts [A] to free the brake hose and rear wheel rotation sensor lead.
- Remove:
  Swingarm Pivot Shaft, Nut and Washers
  Swingarm [B]

NOTE

○*Since the swingarm bearings are packed with grease, cleaning is not required. The bearing that was cleaned should be replacing.*

Swingarm Installation

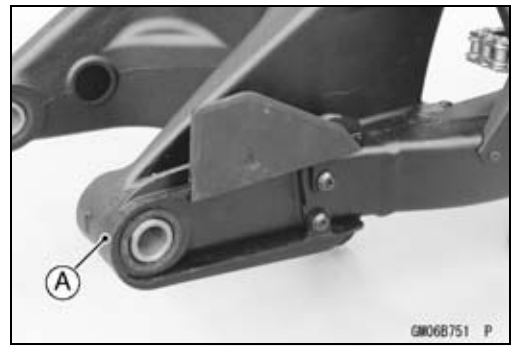

NOTE

○*Since the swingarm bearings are packed with grease, cleaning is not required. The bearing that was cleaned should be replacing.*

- Visually inspect the chain guide [A].

★Replace the chain guide if it shows any signs of abnormal wear or damage.

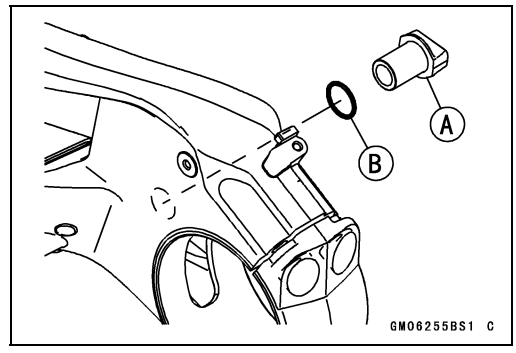

- Visually inspect the caliper holder guide [A].

★Replace the caliper holder guide and O-ring [B] if the guide shows any signs of abnormal wear or damage.

- Apply grease to the O-ring.
- Insert the caliper holder guide until it clicks.

Swingarm

- Apply grease to the lips of the grease seals [A].
- Be sure to install the grease seals and sleeve [B] to the swingarm.
- Fit the collar [C] on the grease seal of the left side.

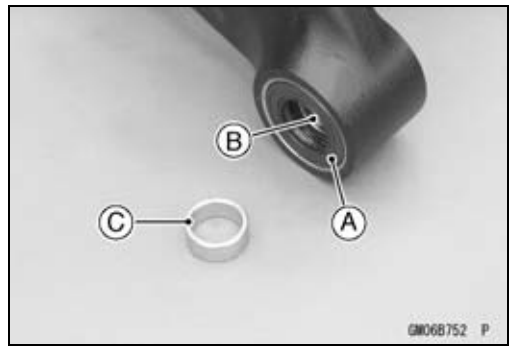

- Apply a npn-permanent locking agent to the threads of swingarm mounting plate bolt (lower).
- Install:
  Swingarm
  Swingarm Pivot Shift, Washers and Nut
  Swingarm Mounting Plate Bolt (Upper) and Nut
  Swingarm Mounting Plate Bolt (Lower)

○Insert the swingarm pivot shaft and swingarm mounting plate bolt (upper) from the left side.

- Tighten:

Torque - Swingarm Pivot Shaft Nut: 108 N·m (11.0 kgf·m, 79.7 ft·lb)
Swingarm Mounting Plate Nut (Upper): 44 N·m (4.5 kgf·m, 32 ft·lb)
Swingarm Mounting Plate Bolt (Lower): 44 N·m (4.5 kgf·m, 32 ft·lb)

- Move the swingarm up and down to check for abnormal friction.
- Install the removed parts (see appropriate chapters).

Swingarm Bearing Removal

- Remove:
  Swingarm (see Swingarm Removal)
  Collar [A]
  Grease Seals [B]
  Sleeve [C]
  Circlip [D]

Special Tool - Inside Circlip Pliers: 57001-143

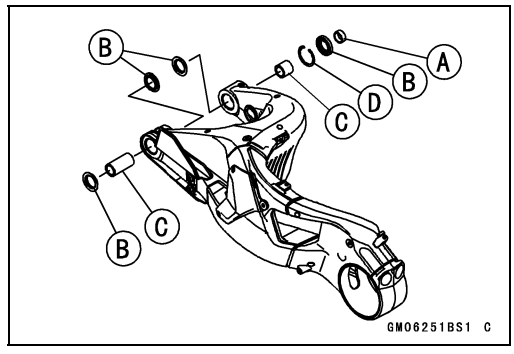

- Remove the ball bearing and needle bearings.

Special Tool - Oil Seal & Bearing Remover [A]: 57001-1058

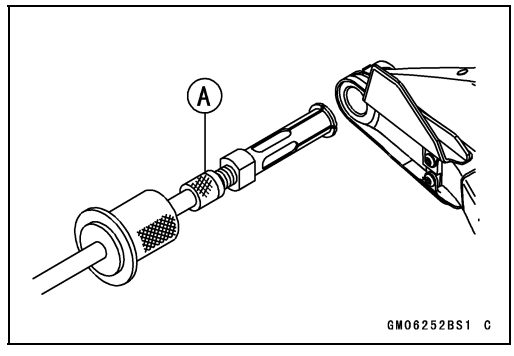

Swingarm

Swingarm Bearing Installation

● Replace the needle bearings, ball bearing, grease seals and circlip with new ones.

NOTE

○*Install the needle and ball bearings so that their marked sides face outward.*

● On the right side [A], press in the ball bearing [B] until it is bottomed.

Special Tool - Bearing Driver Set: 57001-1129

Left Side [C]

● On both sides, press in the needle bearings [D] as shown. 5.6 ±0.4 mm (0.22 ±0.02 in.) [E]

Special Tools - Needle Bearing Driver, ϕ28: 57001-1610
Needle Bearing Driver, ϕ20 & Spacer, ϕ28: 57001-1678

● On the right side, install the circlip [F].

Special Tool - Inside Circlip Pliers: 57001-143

● On the right side, press in the grease seal [G] so that its surface is flush with the swingarm [H].

● On both sides, press in the grease seals [I] until they are bottomed.

Special Tool - Bearing Driver Set: 57001-1129

● Apply grease to the grease seal lips.

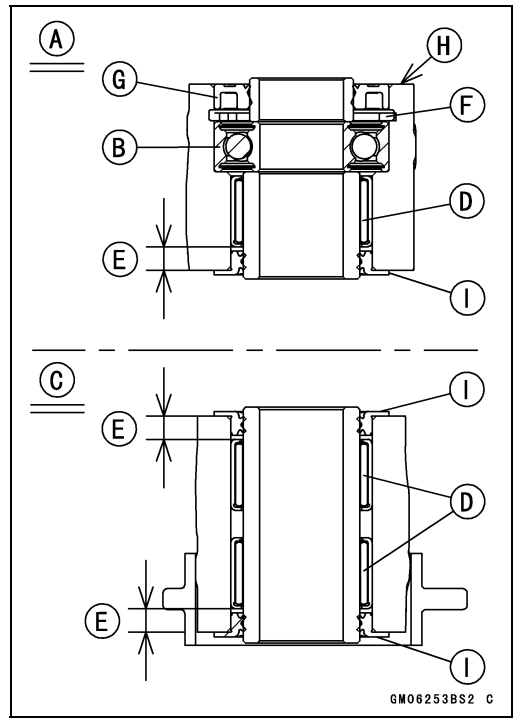

Swingarm Bearing, Sleeve Inspection

NOTICE
Do not remove the bearings for inspection. Removal may damage them.

● Inspect the needle bearings [A] and ball bearing [B] that are installed in the swingarm.

○The rollers and balls in a bearing normally wear very little, and wear is difficult to measure. Instead of measuring, visually inspect the bearing for abrasion, discoloration, or other damage.

★If the needle bearing and sleeve [C] show any sings of abnormal wear, discoloration, or damage, replace them as a set.

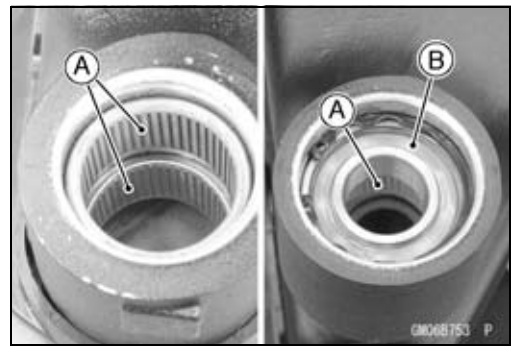

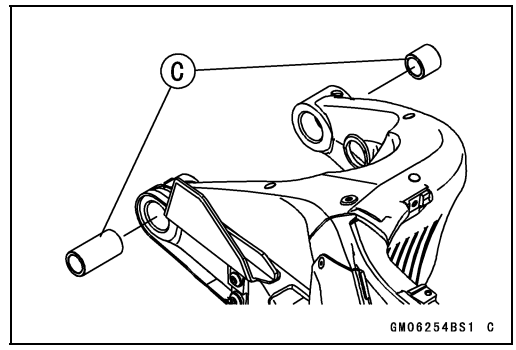

Swingarm

- Turn the bearing in the swingarm back and forth [A] while checking for plays, roughness, or binding.

★If bearing play, roughness, or binding is found, replace the bearing.

- Examine the bearing seal [B] for tears or leakage.

★If the seal is torn or is leaking, replace the bearing.

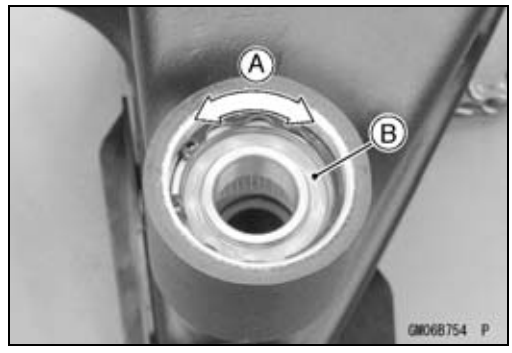

Swingarm Bearing Lubrication

NOTE

○*Since the bearings are packed with grease and sealed, lubrication is not required.*

Chain Guide Inspection

- Refer to the Chain Guide Wear Inspection in the Periodic Maintenance chapter.

Tie-Rod, Rocker Arm

Tie-Rod Removal

● Support the front of the motorcycle with the stand.

⚠ WARNING

When raising the rear wheel off the ground and removing part(s) from the motorcycle, be sure to support the front of the motorcycle, or the motorcycle may fall over. It could cause an accident and injury.

● Remove:
Side Stand Bracket (see Side Stand Removal in the Frame chapter)
Engine Sprocket Cover (see Engine Sprocket Removal in the Final Drive chapter)
Bolt [A]
Stopper [B]

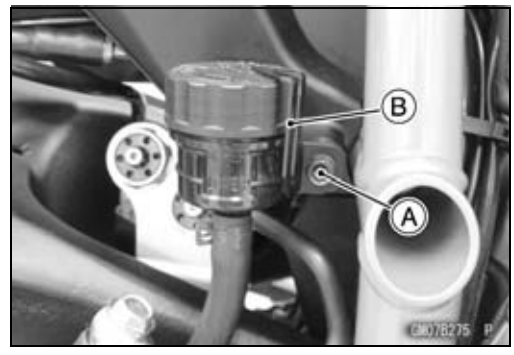

● Loosen:
Tie-Rod Bolts [A] and Nuts



● Raise the rear wheel off the ground with webbing slings [A].
○Hang the webbing slings to the frame as shown.
○Protect the vehicle using suitable clothes [B].
● Remove:
Tie-Rod Bolts and Nuts
Tie-Rods

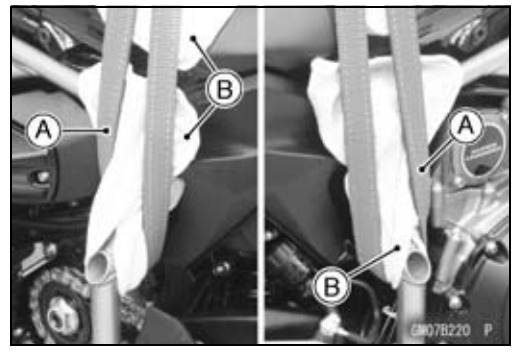

Tie-Rod Installation

● Replace the tie-rod nuts with new ones.
● Install the tie-rod, bolts and nuts temporarily.
○Insert the bolts from the left side.
● Remove the webbing slings.

NOTE

○*When tightening the tie-rod nuts, lower the rear wheel to the ground.*

● Tighten:

Torque - Tie-Rod Nuts: 34 N·m (3.5 kgf·m, 25 ft·lb)

● After tightening, check that the bolt ends protrude from the nuts.
● Install the removed parts (see appropriate chapters).

Tie-Rod, Rocker Arm

Rocker Arm Removal

● Support the front of the motorcycle with the stand.

⚠ WARNING

When raising the rear wheel off the ground and removing part(s) from the motorcycle, be sure to support the front of the motorcycle, or the motorcycle may fall over. It could cause an accident and injury.

● Remove:
Engine Sprocket Cover (see Engine Sprocket Removal in the Final Drive chapter)
Bolt [A]
Stopper [B]

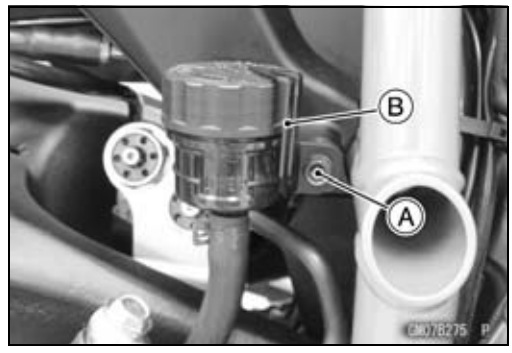

● Loosen:
Lower Rear Shock Absorber Bolt [A] and Nut
Rear Tie-Rod Bolt [B] and Nut
Rocker Arm Bolt [C] and Nut

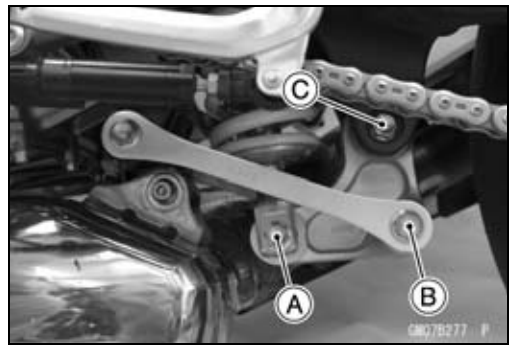

● Raise the rear wheel off the ground with webbing slings [A].
○Hang the webbing slings to the frame as shown.
○Protect the vehicle using suitable clothes [B].
● Remove:
Lower Rear Shock Absorber Bolt and Nut
Rear Tie-Rod Bolt and Nut
Rocker Arm Bolt and Nut
Rocker Arm

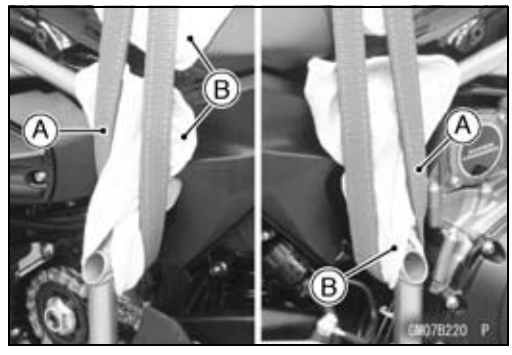

NOTE

○*Since the rocker arm bearings are packed with grease, cleaning is not required. The bearing that was cleaned should be replacing.*

Tie-Rod, Rocker Arm

Rocker Arm Installation

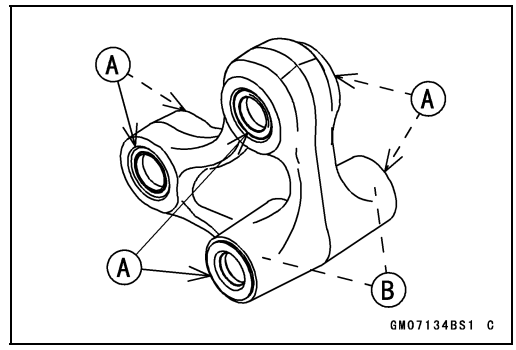

NOTE

○*Since the rocker arm bearings are packed with grease, cleaning is not required. The bearing that was cleaned should be replacing.*

- Apply grease to the grease seal lips [A].
- Apply grease to the needle bearings [B] for the tie-rod bolt.
- Replace the following nuts with new ones.
  Rocker Arm Nut
  Rear Tie-Rod Nut
  Lower Rear Shock Absorber Nut
- Install the rocker arm, bolts and nuts temporarily.

○Insert the bolts from the left side.

- Remove the webbing slings.

NOTE

○*When tightening the nuts, lower the rear wheel to the ground.*

- Tighten:

Torque - Rocker Arm Nut: 34 N·m (3.5 kgf·m, 25 ft·lb)
Tie-Rod Nut: 34 N·m (3.5 kgf·m, 25 ft·lb)
Lower Rear Shock Absorber Nut: 34 N·m (3.5 kgf·m, 25 ft·lb)

- After tightening, check that the bolt ends protrude from the nuts.
- Install the removed parts (see appropriate chapters).

Tie-Rod, Rocker Arm

Tie-Rod and Rocker Arm Bearing Removal

- Remove:
  Swingarm Mounting Plate [A] (see Engine Removal in the Engine Removal/Installation chapter)
  Rocker Arm [B] (see Rocker Arm Removal)
  Sleeves [C]
  Grease Seals [D]
- Remove the needle bearings [E] using a suitable tool.

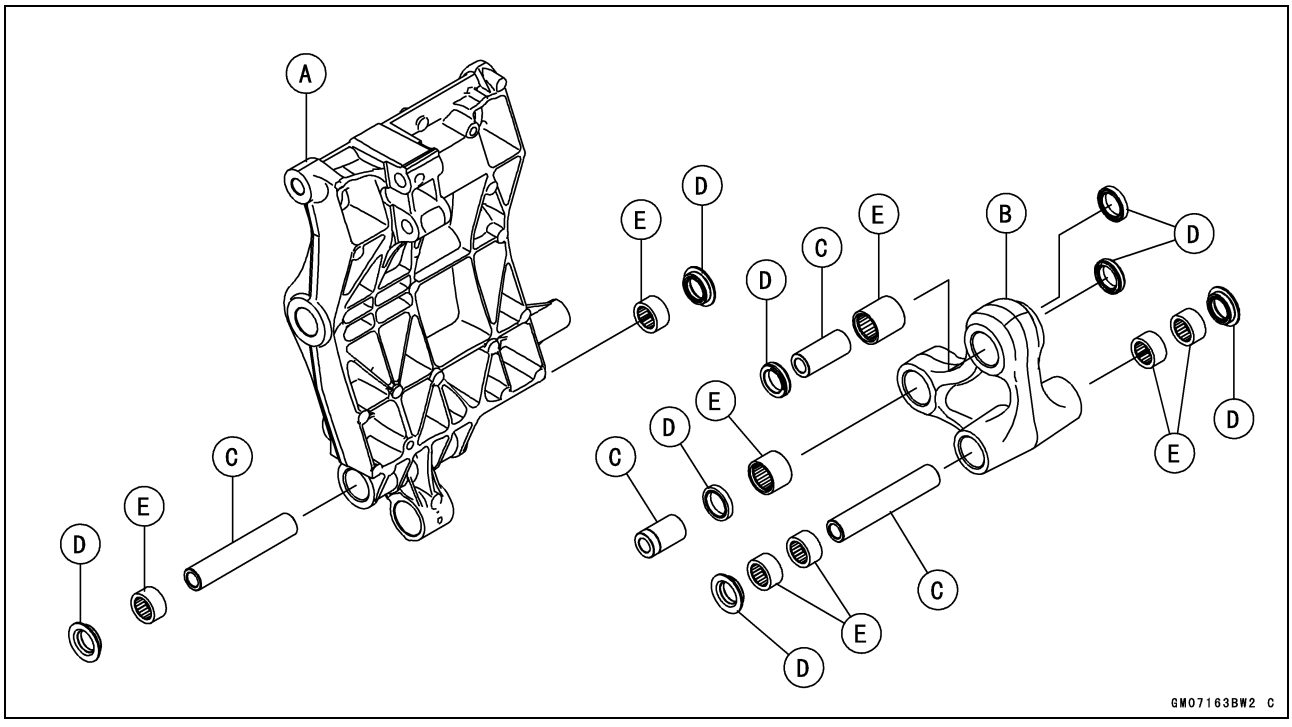

Tie-Rod and Rocker Arm Bearing Installation

- Replace the needle bearing and grease seals with new ones.
- Install the needle bearings.

○The installing positions are as shown.

○Install the needle bearings for the rear shock absorber portion and swingarm portion from the marked side of the rocker arm.

Special Tool - Bearing Driver Set: 57001-1129

- Apply grease to the needle bearing for the tie-rod portion.

NOTE

○*Install the needle bearings so that the marked side faces outward.*

- Apply plenty of grease to the lips of the grease seals.
- Install the grease seals.

Tie-Rod, Rocker Arm

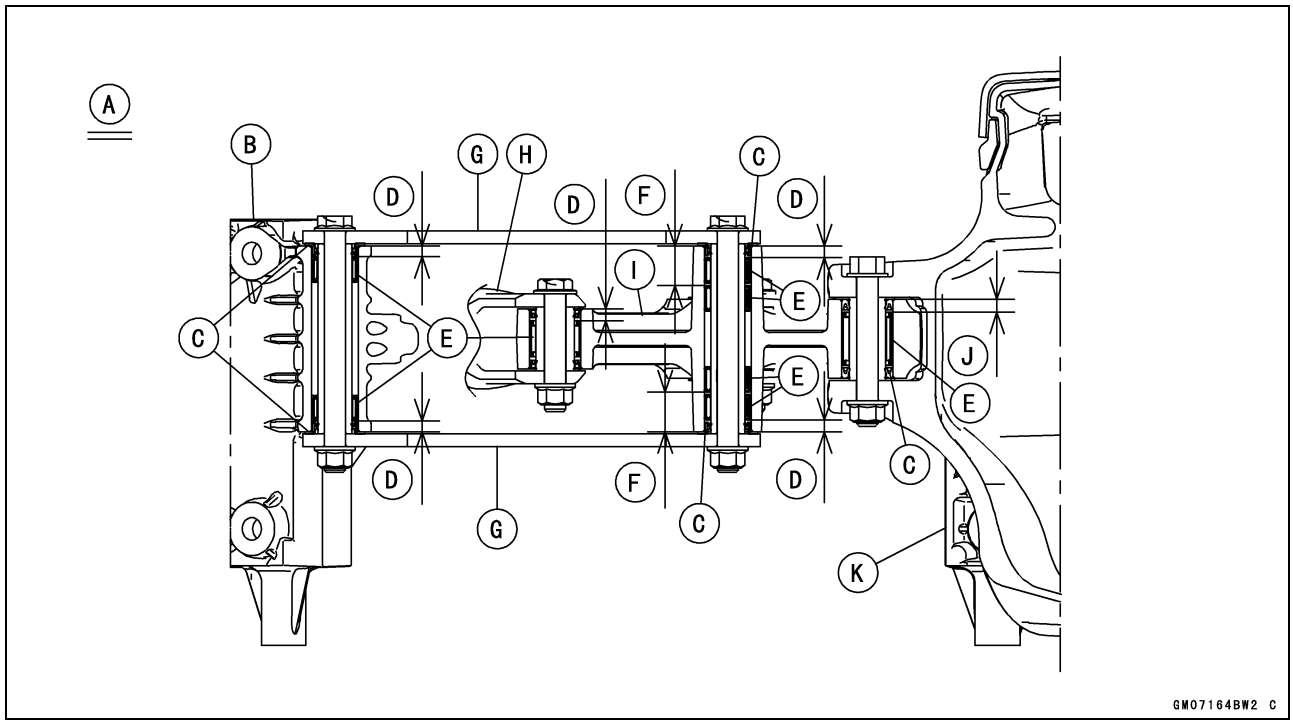

Viewed from Bottom [A]
Swingarm Mounting Bracket [B]
Grease Seals [C]
5.5 ±0.4 mm (0.22 ±0.02 in.) [D]
Needle Bearings [E]
18.5 ±0.4 mm (0.728 ±0.02 in.) [F]
Tie-Rods [G]
Rear Shock Absorber [H]
Rocker Arm [I]
6.0 ±0.4 mm (0.24 ±0.02 in.) [J]
Swingarm [K]

Rocker Arm/Tie-Rod Bearing, Sleeve Inspection

NOTICE
Do not remove the bearings for inspection. Removal may damage them.

- Visually inspect the rocker arm, tie-rod sleeves [A] and needle bearings [B].
- The rollers in a needle bearing normally wear very little, and wear is difficult to measure. Instead of measuring, inspect the bearing for abrasion, color change, or other damage.

★If there is any doubt as to the condition of any of the needle bearings or sleeve, replace the sleeve and needle bearings as a set.

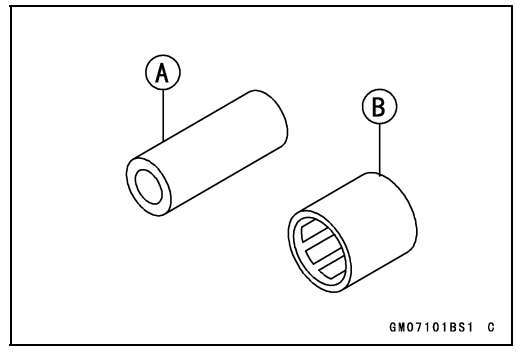

Rocker Arm/Tie-Rod Bearing Lubrication

NOTE

○*Since the bearings are packed with grease, lubrication is not required.*

Steering

Table of Contents

Exploded View 14-2
Special Tools 14-4
Steering 14-5
  Steering Inspection 14-5
  Steering Adjustment 14-5
Electronic Steering Damper (ESD) 14-6
  Electronic Steering Damper Removal 14-6
  Electronic Steering Damper Installation 14-6
  Electronic Steering Damper Oil Leak Inspection 14-6
  Electronic Steering Damper Inspection 14-6
  ESD ECU Removal 14-7
  ESD ECU Installation 14-7
  ESD ECU Inspection 14-7
Steering Stem 14-8
  Stem, Stem Bearing Removal 14-8
  Stem, Stem Bearing Installation 14-10
  Steering Stem Bearing Lubrication 14-12
  Steering Stem Warp Inspection 14-13
  Stem Cap Deterioration, Damage Inspection 14-13
Handlebar 14-14
  Handlebar Removal 14-14
  Handlebar Installation 14-15

Exploded View

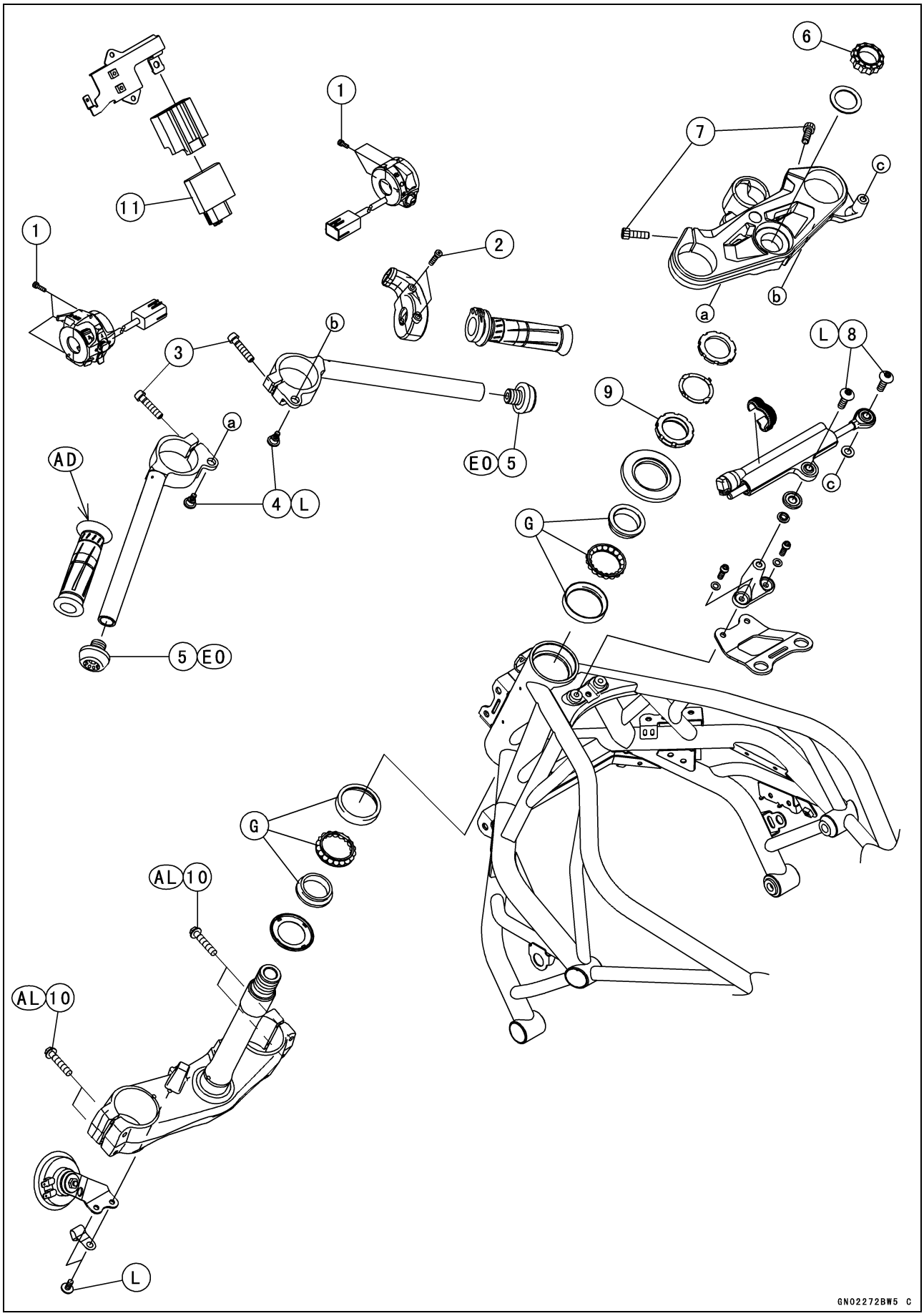

Exploded View

No.	Fastener	Torque			Remarks
		N·m	kgf·m	ft·lb	
1	Switch Housing Bolts	0.90	0.09	8 in·lb	
2	Throttle Case Bolts	3.5	0.36	31 in·lb	
3	Handlebar Clamp Bolts	25	2.5	18	
4	Handlebar Positioning Bolts	9.8	1.0	87 in·lb	L
5	Handlebar Weights	30	3.1	22	EO
6	Steering Stem Head Nut	78	8.0	58	
7	Upper Front Fork Clamp Bolts	20	2.0	15	
8	Steering Damper Mounting Bolts	11	1.1	97 in·lb	L
9	Steering Stem Nut	20	2.0	15	
10	Lower Front Fork Clamp Bolts	23	2.3	17	AL

11. ESD ECU
AD: Apply adhesive.
AL: Tighten the two clamp bolts alternately two times to ensure even tightening torque.
EO: Apply engine oil.
G: Apply grease.
L: Apply a non-permanent locking agent.

Special Tools

Head Pipe Outer Race Press Shaft:
57001-1075

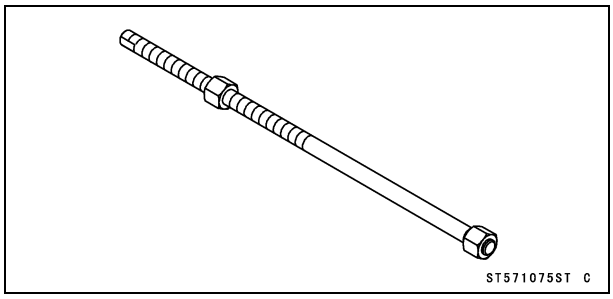

Bearing Driver Set:
57001-1129

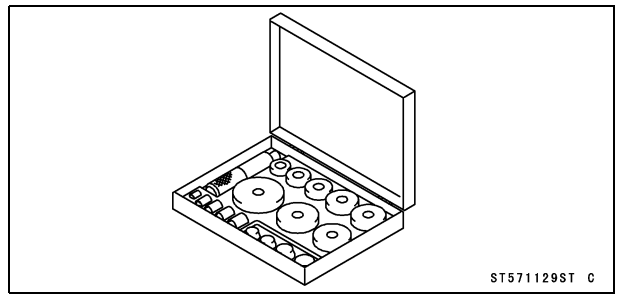

Head Pipe Outer Race Driver, ϕ54.5:
57001-1077

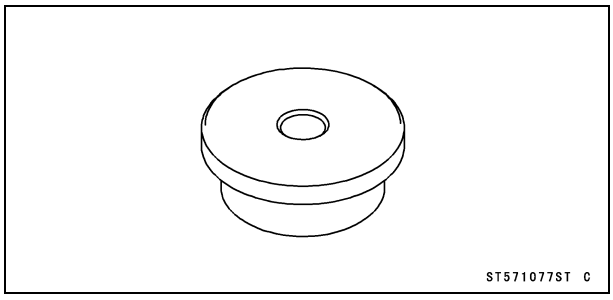

Steering Stem Bearing Driver, ϕ42.5:
57001-1344

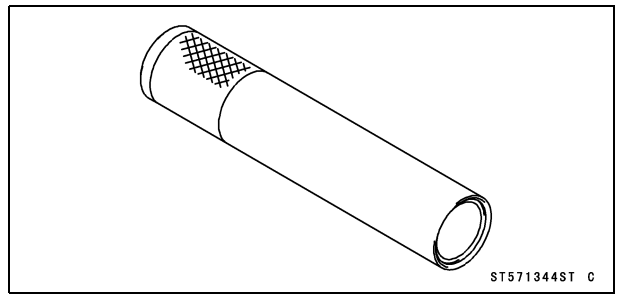

Steering Stem Nut Wrench:
57001-1100

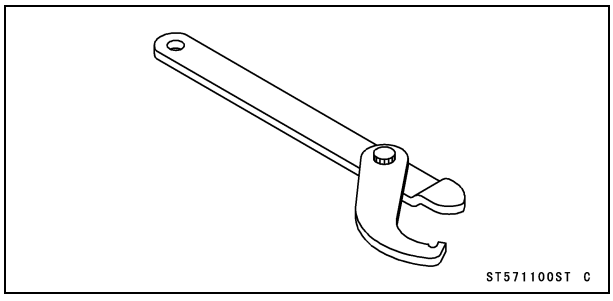

Steering Stem Bearing Driver Adapter, ϕ41.5:
57001-1345

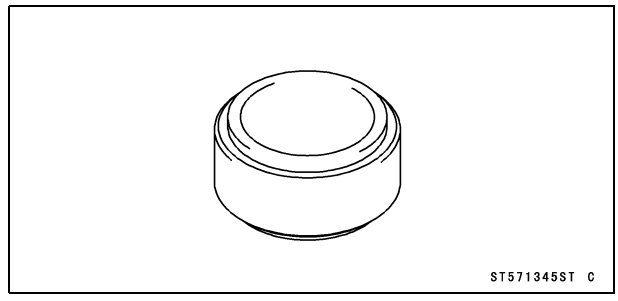

Steering

Steering Inspection

- Refer to the Steering Play Inspection in the Periodic Maintenance chapter.

Steering Adjustment

- Refer to the Steering Play Adjustment in the Periodic Maintenance chapter.

Electronic Steering Damper (ESD)

Electronic Steering Damper Removal

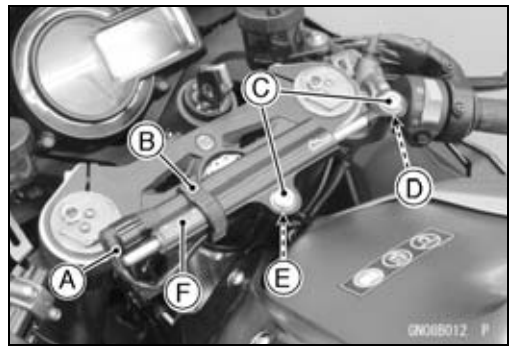

- Disconnect the connector [A].
- Remove:
  Clamp [B]
  Steering Damper Mounting Bolts [C]
  Metal Washer [D]
  Plastic Washer and Flanged Collar [E]
  Electronic Steering Damper [F]

Electronic Steering Damper Installation

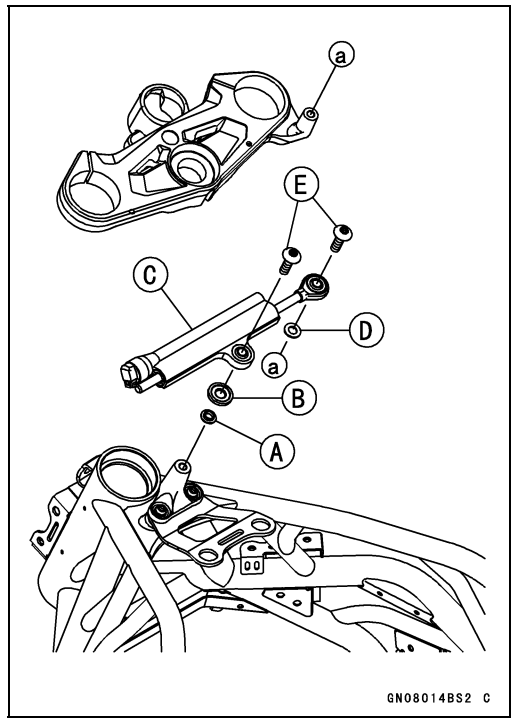

- Install:
  Flanged Collar [A]
  Plastic Washer [B]
  Electronic Steering Damper [C]
  Metal Washer [D]
- Apply a non-permanent locking agent to the threads of the steering damper mounting bolts [E].
- Tighten:

Torque - Steering Damper Mounting Bolts: 11 N·m (1.1 kgf·m, 97 in·lb)

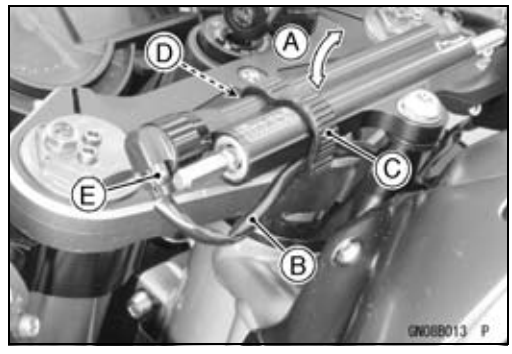

- After tightening the steering damper mounting bolts, check that the electronic steering damper has a free play [A].
- Run the electronic steering damper lead [B] correctly (see Cable, Wire, and Hose Routing section in the Appendix chapter).
- Hold the electronic steering damper lead with the clamp [C].

○Fit the projection [D] of the clamp to the hole in front of the electronic steering damper.

- Connect the connector [E].

Electronic Steering Damper Oil Leak Inspection

- Refer to the Electronic Steering Damper Oil Leak Inspection in the Periodic Maintenance chapter.

Electronic Steering Damper Inspection

- Refer to the ESD Actuator Resistance Inspection in the Self-diagnosis System chapter.

Electronic Steering Damper (ESD)

ESD ECU Removal

NOTICE
Never drop the ECU especially on a hard surface. Such a shock to the ECU can damage it.

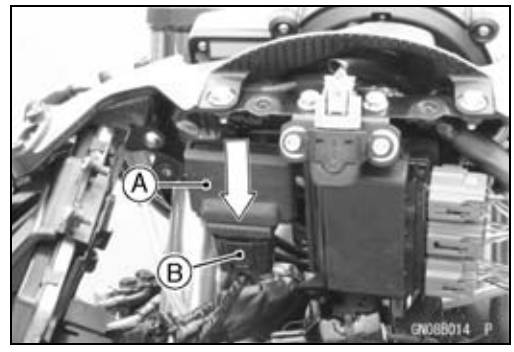

- Remove:
  Upper Fairing (see Upper Fairing Removal in the Frame chapter)
- Slide the ESD ECU with the rubber protector [A] downward to clear the hook.
- Disconnect the ESD ECU connector [B].

ESD ECU Installation

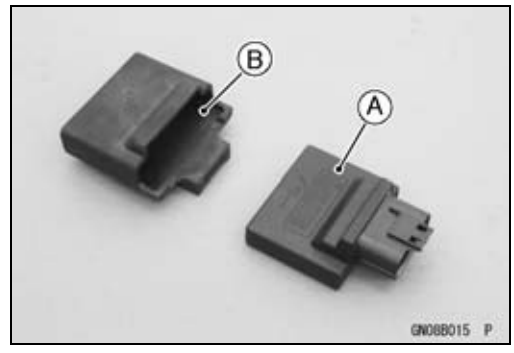

- Install the ESD ECU [A] in the rubber protector [B].
- Connect the ESD ECU connector.
- Install the ESD ECU.

○Insert the slot of the rubber protector to the hook.

- Install the removed parts (see appropriate chapters).

ESD ECU Inspection

- Refer to the ESD ECU Power Supply Inspection in the Self-diagnosis System chapter.

Steering Stem

Stem, Stem Bearing Removal

- Remove:
  Upper Fairing (see Upper Fairing Removal in the Frame chapter)
  Electronic Steering Damper (see Electronic Steering Damper Removal)
- Loosen the steering stem head nut [A].

NOTE

○*Use the 36 mm wrench (12 pt.).*



- Remove the clutch fluid reservoir bracket bolt [A] to free the clutch fluid reservoir [B].
- Loosen the left upper front fork clamp bolt [C].

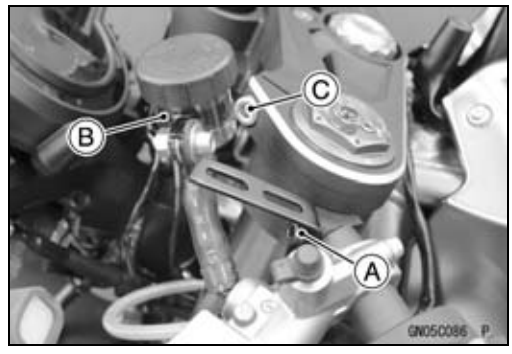

- Remove the front brake fluid reservoir bracket bolt [A] to free the front brake fluid reservoir [B].
- Loosen the right upper front fork clamp bolt [C].

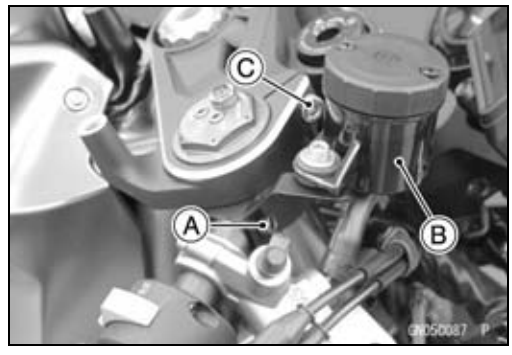

- Remove the handlebar positioning bolt [A] on both sides.



- Remove the steering stem head nut [A] and washer.
- Take the steering stem head [B] off the steering stem.



Steering Stem

- Remove:
  Front Forks (see Front Fork Removal (Each Fork Leg) in the Suspension chapter)
  Brake Hose Fitting Bolts [A]

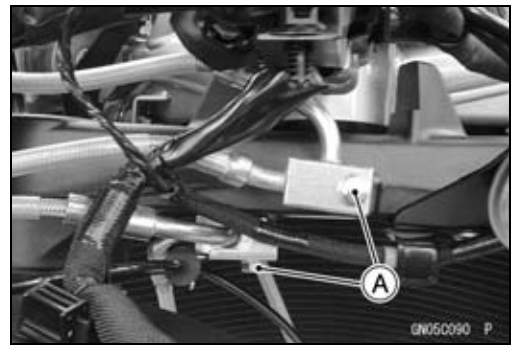

- Remove the horn mounting bolts [A].
- Disconnect the horn lead connectors.

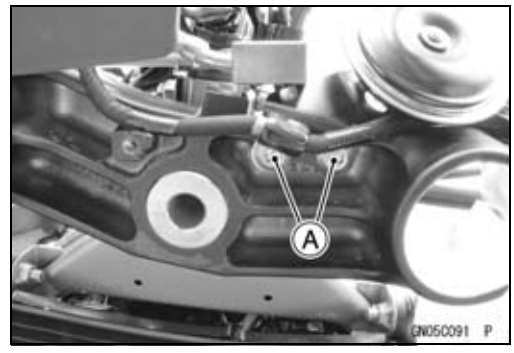

- Straighten the claws [A] of the claw washer.
- Remove the steering stem locknut [B].

  Special Tool - Steering Stem Nut Wrench: 57001-1100

- Remove the claw washer.

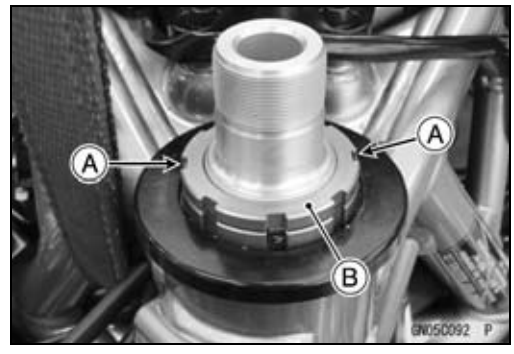

- While pushing up the stem base [A], remove the steering stem nut [B] and stem cap [C].

  Special Tool - Steering Stem Nut Wrench [D]: 57001-1100

- Remove:
  Steering Stem
  Upper Ball Bearing Inner Race
  Upper Ball Bearing

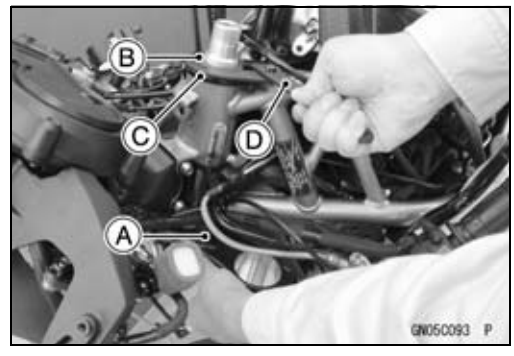

- To remove the ball bearing outer races [A] pressed into the head pipe [B], insert a bar [C] into the recesses of head pipe, and applying it to both recess alternately hammer it to drive the race out.

NOTE

○*If either steering stem bearing is damaged, it is recommended that both the upper and lower bearings (including outer races) should be replaced with new ones.*

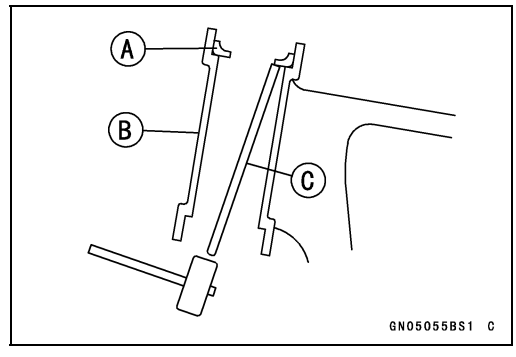

Steering Stem

● Remove the lower ball bearing [A] from the steering stem.

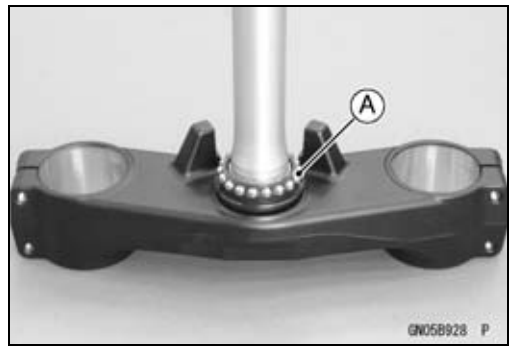

● Remove the lower bearing inner race [A] and grease seal [B] with a suitable commercially available chisel [C].

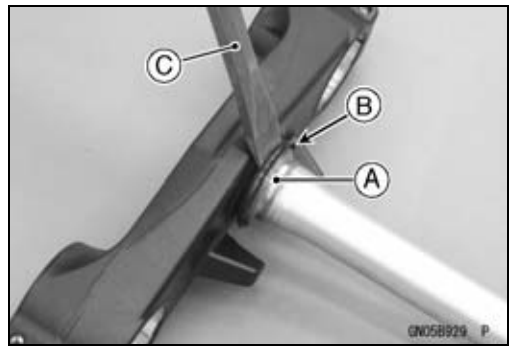

Stem, Stem Bearing Installation

● Replace the bearing outer races with new ones.
● Drive them into the head pipe at the same time.

Special Tools - Head Pipe Outer Race Press Shaft [A]: 57001-1075
Head Pipe Outer Race Driver, ϕ54.5 [B]: 57001-1077
or Bearing Driver Set: 57001-1129

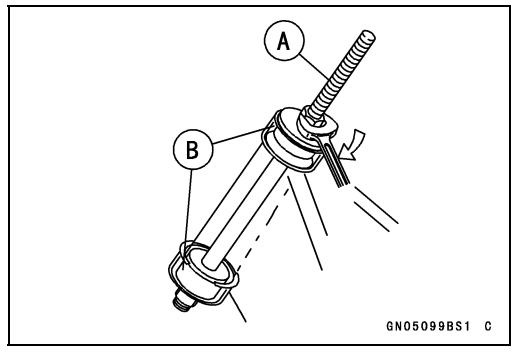

● Apply grease to the outer races.

● Replace the bearing inner races and grease seals with new ones.
● Install the lower grease seal [A] on the steering stem, and press the lower ball bearing inner race [B] applied the grease onto the stem.

Special Tools - Steering Stem Bearing Driver, ϕ42.5 [C]: 57001-1344
Steering Stem Bearing Driver Adapter, ϕ41.5 [D]: 57001-1345

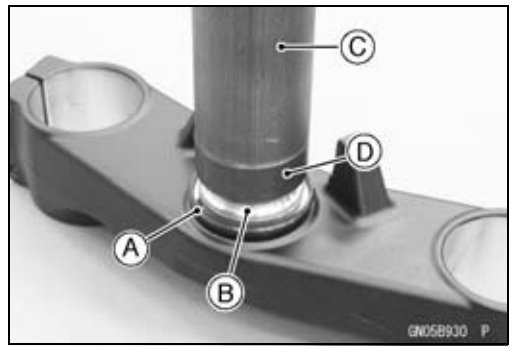

○Install the lower grease seal [A] so that the one of drain hole [B] faces forward [C].

NOTE

○*Do not apply grease to the drain holes of the grease seal to prevent clogging.*

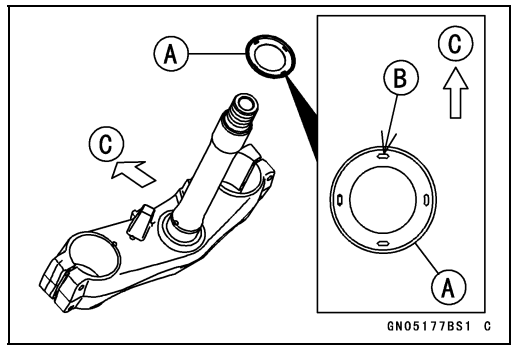

Steering Stem

- Apply grease to the lower ball bearing [A], and install it onto the steering stem.

○The lower and upper ball bearings are identical.

- Apply grease to the upper ball bearing [B] and inner race [C].

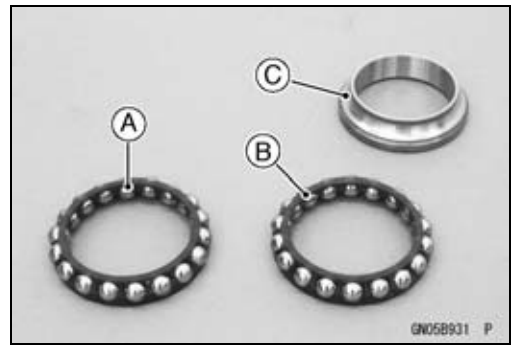

- Install:
  Steering Stem [A]
  Upper Ball Bearing and Inner Race [B]
  Stem Cap [C]
  Steering Stem Nut [D]

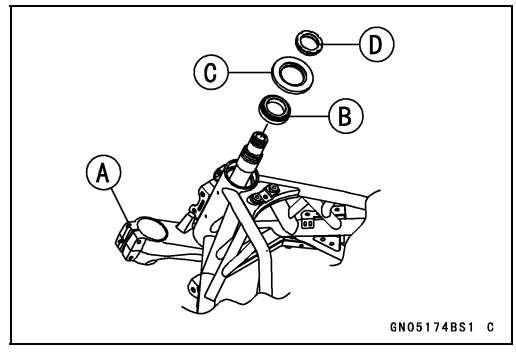

- Settle the bearings in place as follows.

○Tighten the steering stem nut with **65 N·m (6.6 kgf·m, 48 ft·lb)** of torque first, and loosen it a fraction of a turn until it turns lightly. Afterward tighten it again with specified torque using a steering stem nut wrench [A].

○Check that there is no play and the steering stem turns smoothly without rattles. If not, the steering stem bearings may be damaged.

Special Tool - Steering Stem Nut Wrench: 57001-1100

Torque - Steering Stem Nut: 20 N·m (2.0 kgf·m, 15 ft·lb)

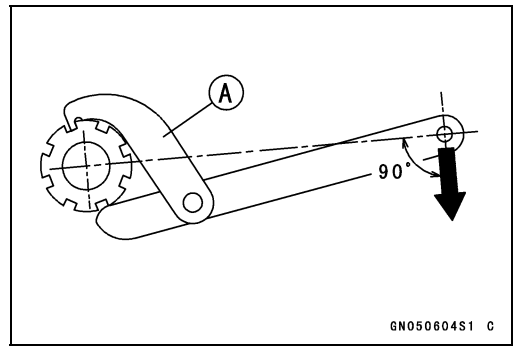

- Install the claw washer [A] so that its bent side [B] faces upward, and engage the bent claws with the grooves of stem locknut [C].
- Hand tighten the stem locknut until it touches the claw washer.
- Tighten the stem locknut clockwise until the claws are aligned with the grooves (ranging from 2nd to 4th) of stem nut [D], and bend the 2 claws downward.

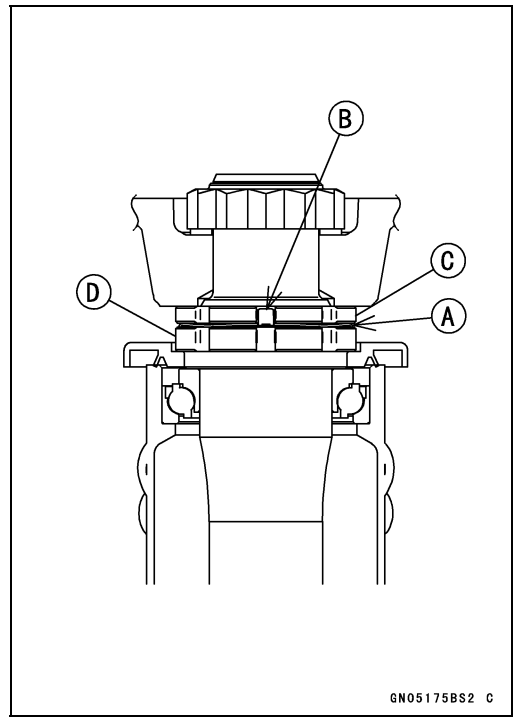

Steering Stem

- Install the stem head.
- Install the washer, and temporary tighten the stem head nut.
- Apply a non-permanent locking agent to the thread of the horn mounting bolts.
- Install the horn.
- Install the front forks (see Front Fork Installation (Each Fork Leg) in the Suspension chapter).

NOTE

○*Tighten the upper front fork clamp bolts first, next the stem head nut, last the lower front fork clamp bolts.*

○*Tighten the two lower front fork clamp bolts alternately two times to ensure even tightening torque.*

- Apply a non-permanent locking agent to the threads of the handlebar positioning bolts.
- Tighten:

Torque - Upper Front Fork Clamp Bolts: 20 N·m (2.0 kgf·m, 15 ft·lb)
Steering Stem Head Nut: 78 N·m (8.0 kgf·m, 58 ft·lb)
Lower Front Fork Clamp Bolts: 23 N·m (2.3 kgf·m, 17 ft·lb)
Handlebar Positioning Bolts: 9.8 N·m (1.0 kgf·m, 87 in·lb)
Handlebar Clamp Bolts: 25 N·m (2.5 kgf·m, 18 ft·lb)
Clutch Reservoir Bracket Bolt: 6.9 N·m (0.70 kgf·m, 61 in·lb)
Front Brake Reservoir Bracket Bolt: 8.8 N·m (0.90 kgf·m, 78 in·lb)

⚠ WARNING

If the handlebar does not turn to the steering stop it may cause an accident resulting in injury or death. Be sure the cables, harnesses and hoses are routed properly and do not interfere with handlebar movement (see Cable, Wire, and Hose Routing section in the Appendix chapter).

- Install the removed parts (see appropriate chapters).

Steering Stem Bearing Lubrication

- Refer to the Steering Stem Bearing Lubrication in the Periodic Maintenance chapter.

Steering Stem

Steering Stem Warp Inspection

- Whenever the steering stem is removed, or if the steering can not be adjusted for smooth action, check the steering stem for straightness.

★If the steering stem [A] is bent, replace the steering stem.

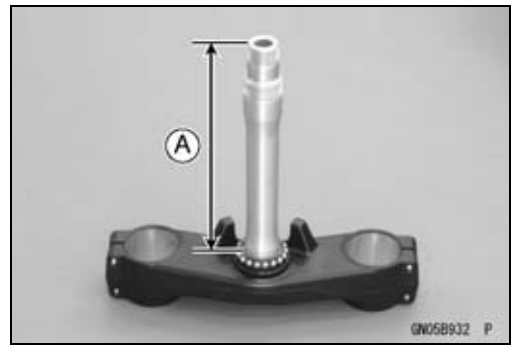

Stem Cap Deterioration, Damage Inspection

★Replace the stem cap if its oil seal [A] shows damage.

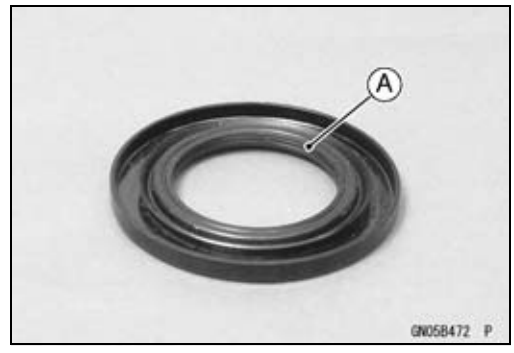

Handlebar

Handlebar Removal

- Remove:
  Steering Damper (see Steering Damper Removal)
  Clutch Lever Clamp Bolts [A]
  Clutch Reservoir Bracket Bolt [B]
  Left Switch Housing [C]
  Handlebar Weight [D]
  Left Handlebar Grip [E]

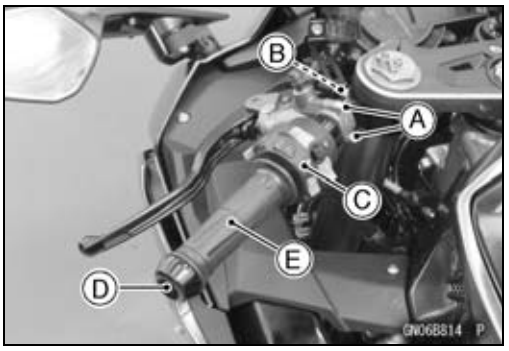

- Remove:
  Front Master Cylinder Clamp Bolts [A]
  Front Brake Reservoir Bracket Bolt [B]
  Right Switch Housing [C]
  Throttle Case [D]
  Handlebar Weight [E]
  Throttle Grip [F]

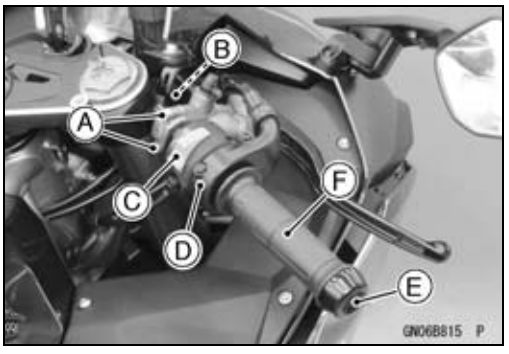

- Loosen:
  Upper Front Fork Clamp Bolts [A]
  Handlebar Clamp Bolts [B]



- Remove:
  Handlebar Positioning Bolts [A]



- Remove:
  Steering Stem Head Nut [A] and Washer
  Steering Stem Head [B]
  Handlebars

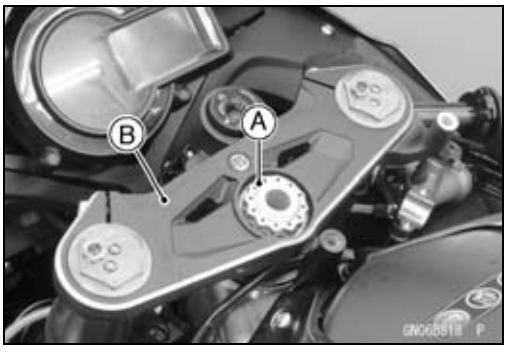

Handlebar

Handlebar Installation

- Insert the handlebar to the front fork.
- Install the steering stem head and washer.
- Tighten the steering stem head nut temporarily.
- Tighten:

Torque - Steering Stem Head Nut: 78 N·m (8.0 kgf·m, 58 ft·lb)
Upper Front Fork Clamp Bolts: 20 N·m (2.0 kgf·m, 15 ft·lb)

NOTE

○*Tighten the steering stem head nut before tightening the upper front fork clamp bolts.*

⚠ WARNING

Do not impede the handlebar turning by routing the cables, harnesses and hoses improperly (see Cable, Wire, and Hose Routing section in the Appendix chapter).

- Apply a non-permanent locking agent to the threads of the handlebar positioning bolts [A].
- Tighten:

Torque - Handlebar Positioning Bolts: 9.8 N·m (1.0 kgf·m, 87 in·lb)
Handlebar Clamp Bolts [B]: 25 N·m (2.5 kgf·m, 18 ft·lb)

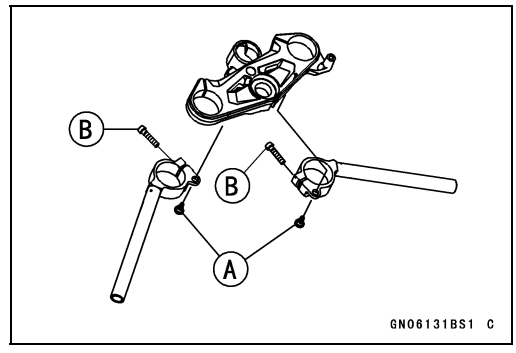

NOTE

○*Tighten the handlebar positioning bolts before tightening the handlebar clamp bolts.*

- Apply adhesive to the inside of the left handlebar grip [A].
- Install the left handlebar grip.
  1.5 ±0.5 mm (0.059 ±0.020 in.) [B]
- Wipe off the excessive adhesive.

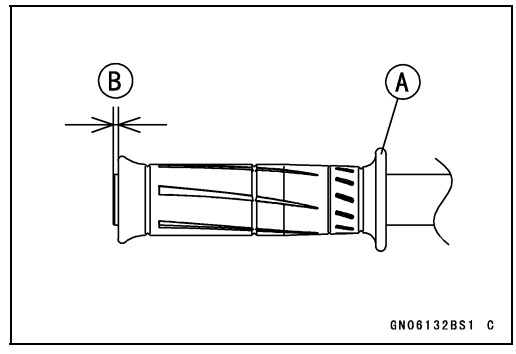

- Apply engine oil to the threads of the handlebar weights [A].
- Install the throttle grip [B].
- Tighten:

Torque - Handlebar Weights: 30 N·m (3.1 kgf·m, 22 ft·lb)

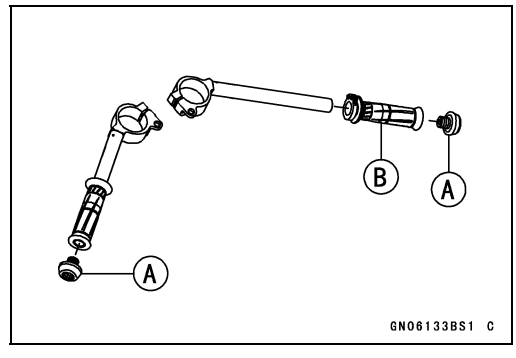

Handlebar

● Install the left and right switch housings.
○Fit the projection [A] into a hole [B] in the handlebars.
● Tighten:

Torque - Switch Housing Bolts: 0.90 N·m (0.09 kgf·m, 8 in·lb)

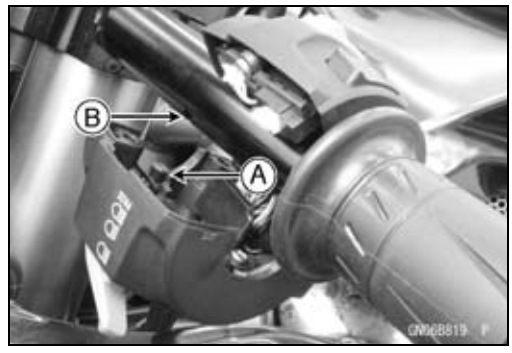

● Install the throttle cable tips to the throttle grip.
● Install the throttle case.
○Fit the projection [A] into a hole [B] in the handlebar.
● Tighten:

Torque - Throttle Case Bolts: 3.5 N·m (0.36 kgf·m, 31 in·lb)

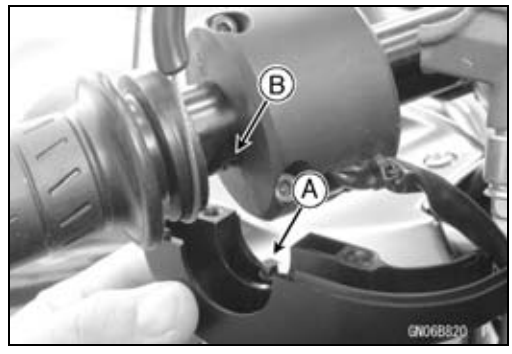

● Tighten:

Torque - Clutch Reservoir Bracket Bolt [A]: 6.9 N·m (0.70 kgf·m, 61 in·lb)
Front Brake Reservoir Bracket Bolt [B]: 8.8 N·m (0.90 kgf·m, 78 in·lb)

● Install the removed parts (see appropriate chapters).

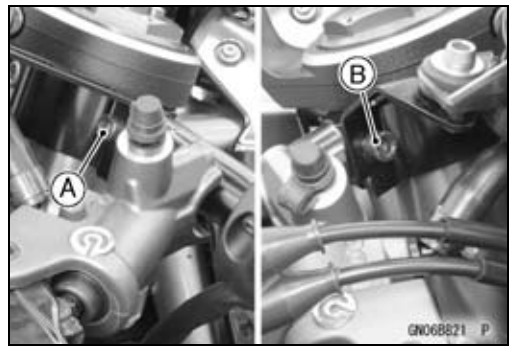

Frame

Table of Contents

Exploded View 15-2
Seat 15-10
Seat Pad Removal 15-10
Seat Pad Installation 15-10
Seat Pad Disassembly 15-11
Seat Pad Assembly 15-11
Seat Removal 15-12
Seat Installation 15-12
Fairings 15-13
Middle Fairing Removal 15-13
Middle Fairing Installation 15-14
Middle Fairing Disassembly 15-15
Middle Fairing Assembly 15-16
Inner Fairing Removal 15-17
Inner Fairing Installation 15-17
Inner Cover Removal 15-18
Inner Cover Installation 15-18
Upper Fairing Removal 15-19
Upper Fairing Installation 15-20
Upper Fairing Disassembly 15-21
Upper Fairing Assembly 15-22
Lower Fairing Removal 15-25
Lower Fairing Installation 15-26
Intake Duct Removal 15-26
Intake Duct Installation 15-27
Side Covers 15-28
Fuel Tank Cover Removal 15-28
Fuel Tank Cover Installation 15-28
Side Cover Removal 15-28
Side Cover Installation 15-29
Seat Covers 15-30
Hip Support Cover Position Adjustment 15-30
Hip Support Cover Removal 15-30
Hip Support Cover Installation 15-31
Hip Support Cover Disassembly 15-32
Hip Support Cover Assembly 15-32
Seat Cover Removal 15-33
Seat Cover Installation 15-33
Fenders 15-34
Front Fender Removal 15-34
Front Fender Installation 15-34
Flap Removal 15-34
Flap Installation 15-35
Flap Disassembly 15-35
Flap Assembly 15-36
Rear Fender Removal 15-37
Rear Fender Installation 15-40
Frame 15-41
Frame Inspection 15-41
Rear Frame Rear Removal 15-41
Rear Frame Rear Installation 15-41
Rear Frame Front Removal 15-42
Rear Frame Front Installation 15-42
Windshield 15-43
Windshield Removal 15-43
Windshield Installation 15-43
Guard 15-44
Mud Guard Removal 15-44
Mud Guard Installation 15-44
Side Stand 15-45
Side Stand Removal 15-45
Side Stand Installation 15-46
Rear View Mirrors 15-47
Rear View Mirror Removal 15-47
Rear View Mirror Installation 15-47

Exploded View

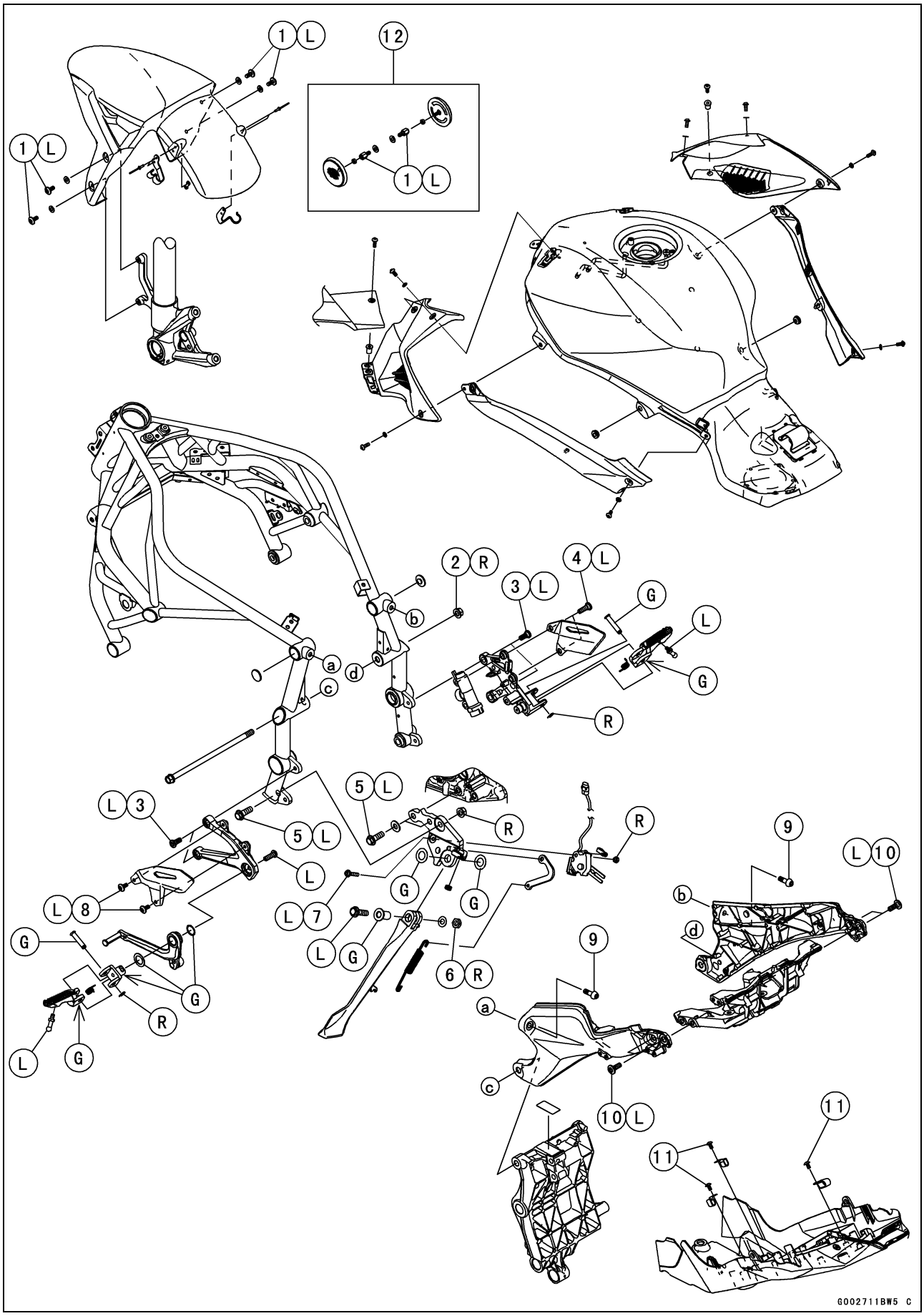

Exploded View

No.	Fastener	Torque			Remarks
		N·m	kgf·m	ft·lb	
1	Front Fender Mounting Bolts	3.9	0.40	35 in·lb	L
2	Swingarm Mounting Plate Nut (Upper)	44	4.5	32	R
3	Footpeg Bracket Bolts	25	2.5	18	L
4	Rear Master Cylinder Mounting Bolts	25	2.5	18	L
5	Side Stand Bracket Bolts	49	5.0	36	L
6	Side Stand Nut	36	3.7	27	R
7	Side Stand Switch Bolt	8.8	0.90	78 in·lb	L
8	Heel Guard Bolts	9.8	1.0	87 in·lb	L
9	Rear Frame Front Bolts	25	2.5	18	
10	Rear Frame Rear Bolts	27	2.8	20	L
11	Clamp Screws	1.2	0.12	11 in·lb	

12. Other than ID, PH, and TH Models
G: Apply grease.
L: Apply a non-permanent locking agent.
R: Replacement Parts

Exploded View

Other than Special Edition

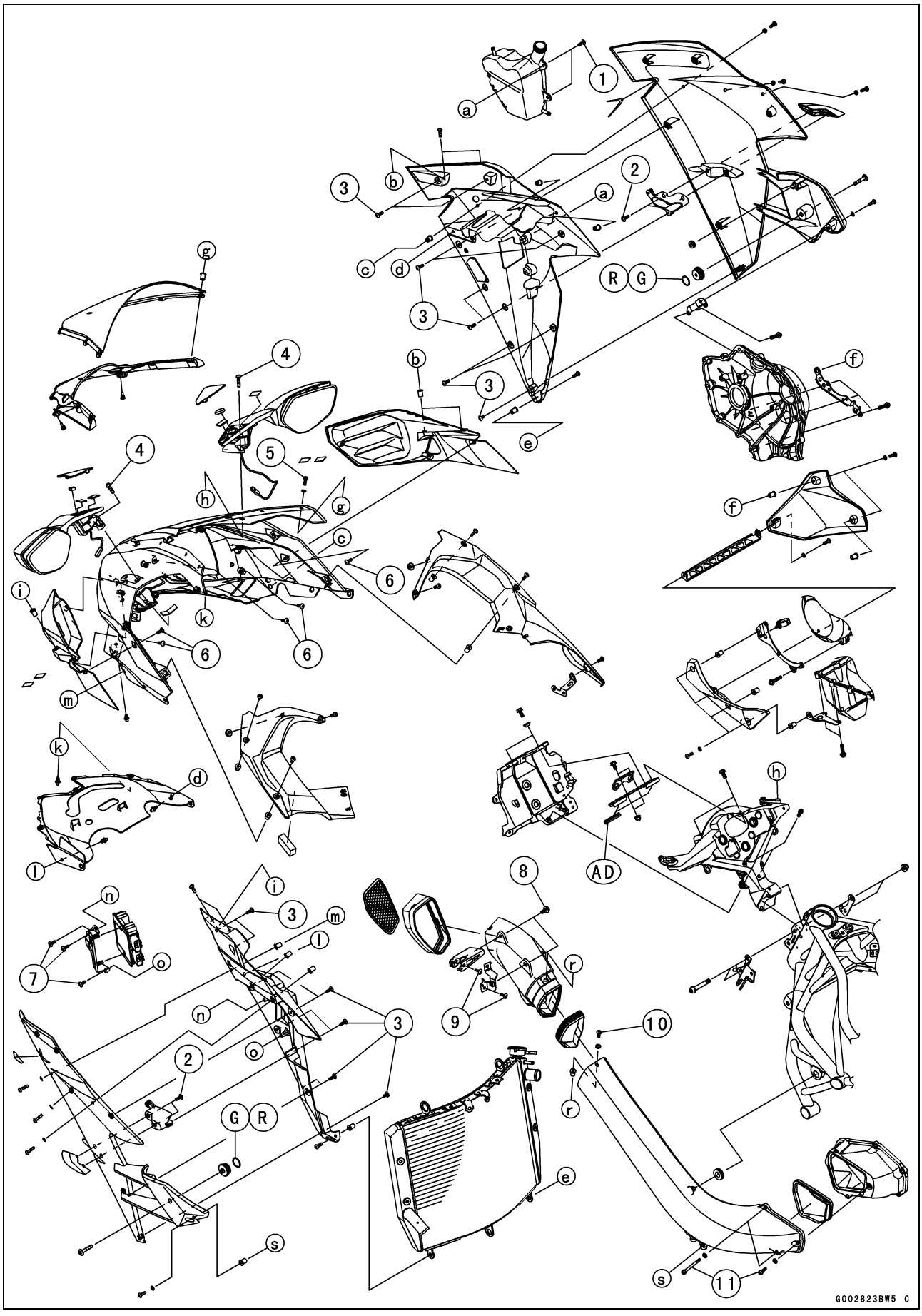

Exploded View

No.	Fastener	Torque			Remarks
		N·m	kgf·m	ft·lb	
1	Coolant Reserve Tank Screws	1.2	0.12	11 in·lb	
2	Middle Fairing Cap Screws	1.2	0.12	11 in·lb	
3	Middle Fairing Inner Cover Screws	1.2	0.12	11 in·lb	
4	Rear View Mirror Mounting Bolts	6.9	0.70	61 in·lb	
5	Windshield Mounting Bolts	0.43	0.044	3.8 in·lb	
6	Upper Fairing Cover Screws	1.2	0.12	11 in·lb	
7	Regulator/Rectifier Bracket Screws	1.2	0.12	11 in·lb	
8	Front Intake Duct Bolts	7.0	0.71	62 in·lb	
9	Intake Duct Bracket Screws	1.2	0.12	11 in·lb	
10	Intake Duct Connecting Bolt	0.50	0.05	4.4 in·lb	
11	Rear Intake Duct Bolts	6.0	0.61	53 in·lb	

AD: Apply adhesive.
G: Apply grease.
R: Replacement Parts

Exploded View

Special Edition

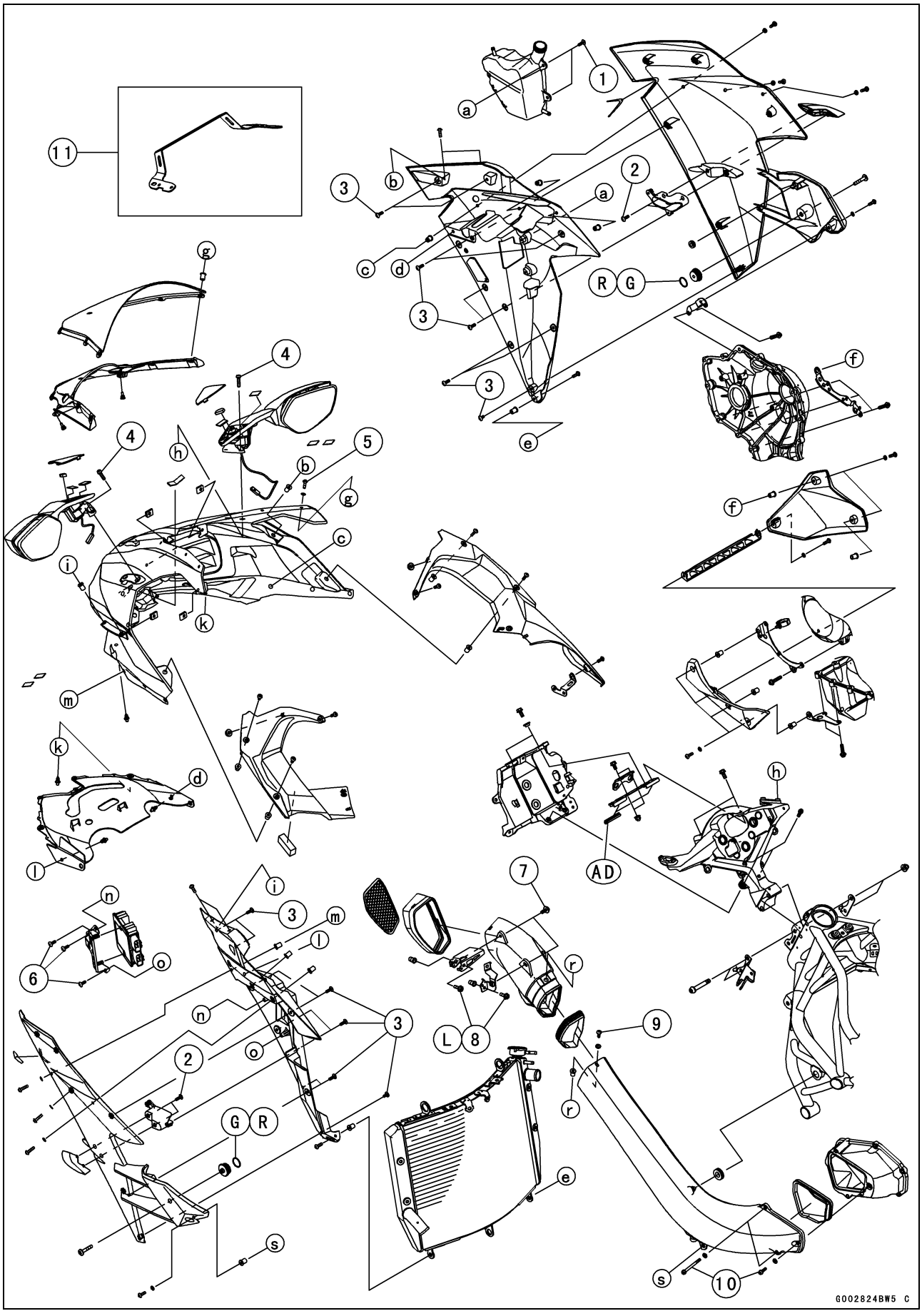

Exploded View

No.	Fastener	Torque			Remarks
		N·m	kgf·m	ft·lb	
1	Coolant Reserve Tank Screws	1.2	0.12	11 in·lb	
2	Middle Fairing Cap Screws	1.2	0.12	11 in·lb	
3	Middle Fairing Inner Cover Screws	1.2	0.12	11 in·lb	
4	Rear View Mirror Mounting Bolts	6.9	0.70	61 in·lb	
5	Windshield Mounting Bolts	0.43	0.044	3.8 in·lb	
6	Regulator/Rectifier Bracket Screws	1.2	0.12	11 in·lb	
7	Front Intake Duct Bolts	7.0	0.71	62 in·lb	
8	Intake Duct Bracket Bolts	5.0	0.51	44 in·lb	L
9	Intake Duct Connecting Bolt	0.50	0.05	4.4 in·lb	
10	Rear Intake Duct Bolts	6.0	0.61	53 in·lb	

11. ID Model
AD: Apply adhesive.
G: Apply grease.
L: Apply a non-permanent locking agent.
R: Replacement Parts

Exploded View

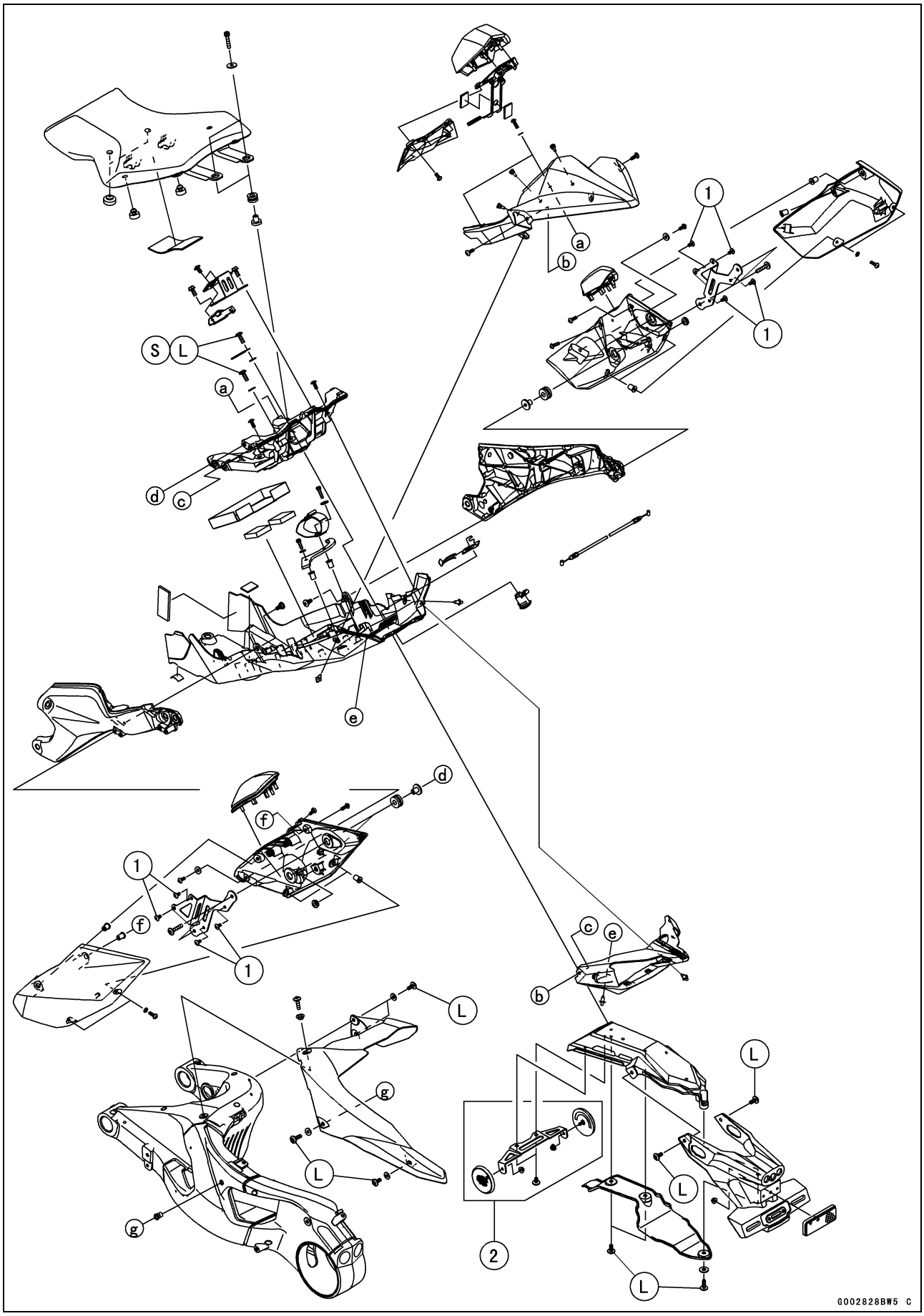

Exploded View

No.	Fastener	Torque			Remarks
		N·m	kgf·m	ft·lb	
1	Hip Support Cover Bracket Screws	1.2	0.12	11 in·lb	

2. US, CA, and CAL Models
L: Apply a non-permanent locking agent.
S: Follow the specified tightening sequence.

Seat

Seat Pad Removal

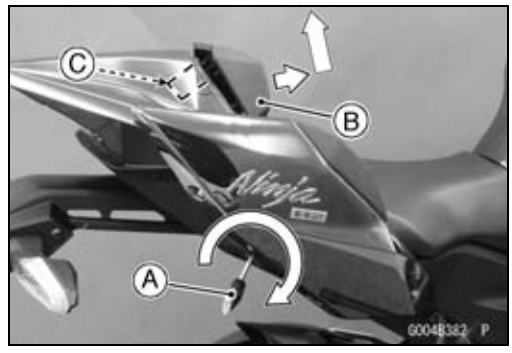

- Insert the ignition key [A] into the seat lock.
- While turning the key clockwise and swaying the seat pad [B] a little to the right and left, pull the seat pad forward to clear the hook [C] from the latch.
- Remove the seat pad upward.

Seat Pad Installation

- Insert the bracket [A] of the seat pad into the hollow [B] of the rear frame rear.
  Seat Pad [C]
  Rear Frame Rear [D]

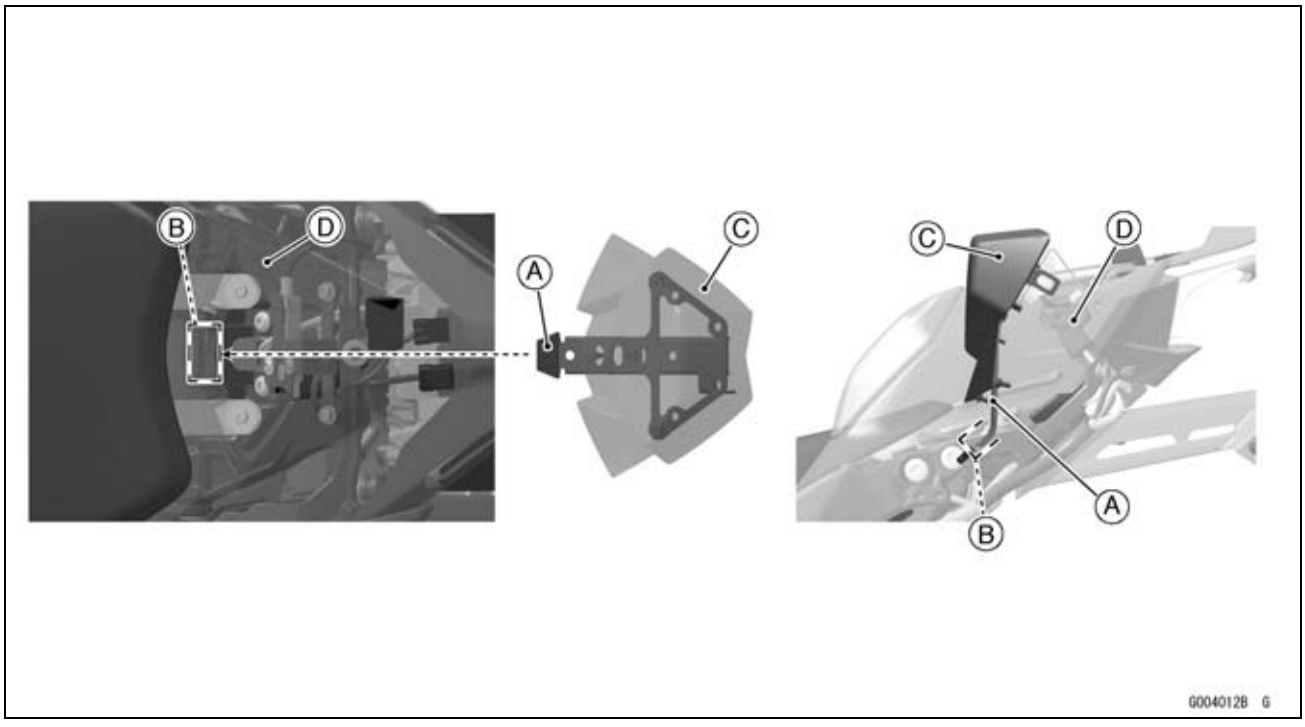

- Insert the hook [A] into the latch hole [B].
- Push down the seat pad until the lock clicks.

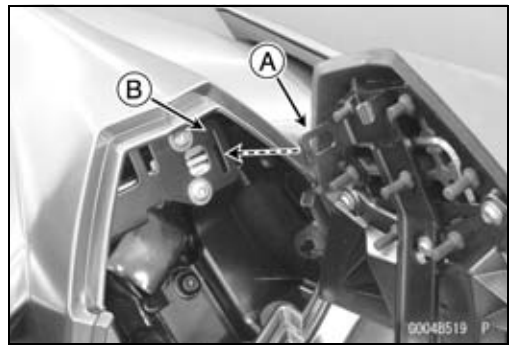

Seat

Seat Pad Disassembly

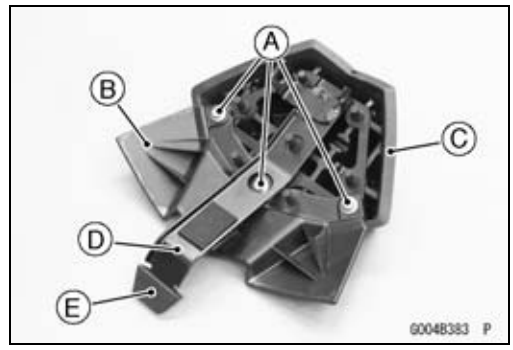

● Remove:
Seat Pad (see Seat Pad Removal)
Bolts [A]
Cover [B]
Seat Pad [C]
Bracket [D]
Damper [E]

Seat Pad Assembly

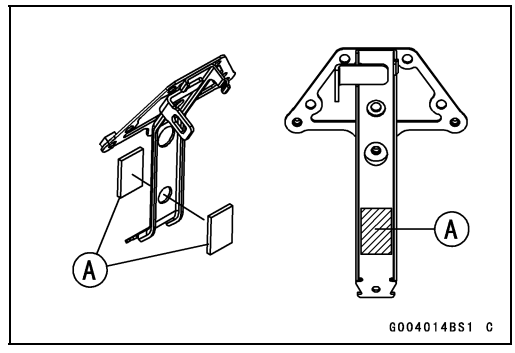

● When installing the dampers [A], position them as shown.

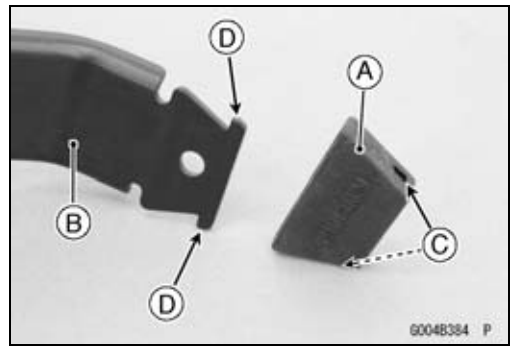

● Install the damper [A] to the bracket [B].
○Fit the holes [C] to the projections [D].

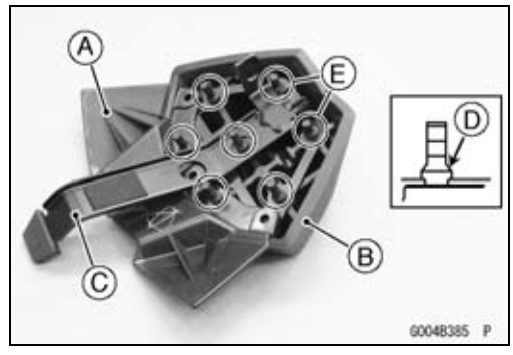

● Install:
Cover [A]
Seat Pad [B]
Bracket [C]
○Be sure to install the flange [D] of the projections [E] fully as shown.
● Tighten the bolts.

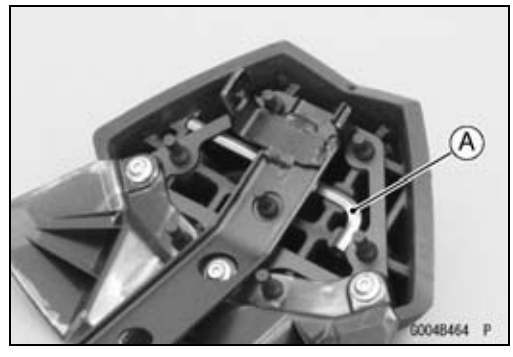

● Install the owner's tool [A] (hex wrench, 5 mm).

Seat

Seat Removal

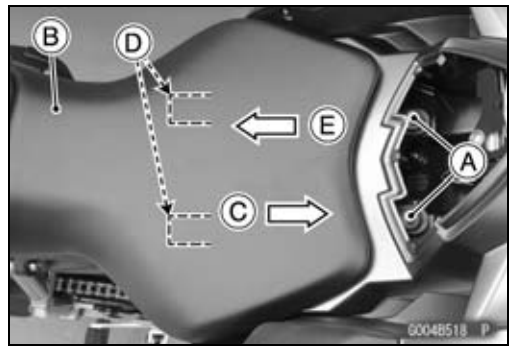

- Remove:
  Seat Pad (see Seat Pad Removal)
  Bolts [A] and Washers
- Slide the seat [B] rearward [C] to clear the seat hooks [D].
- Remove the seat forward [E].

Seat Installation

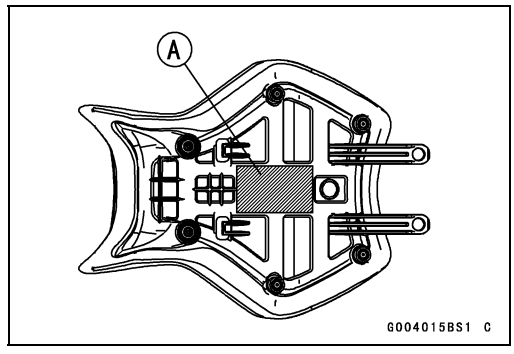

- Be sure to install the pad [A].

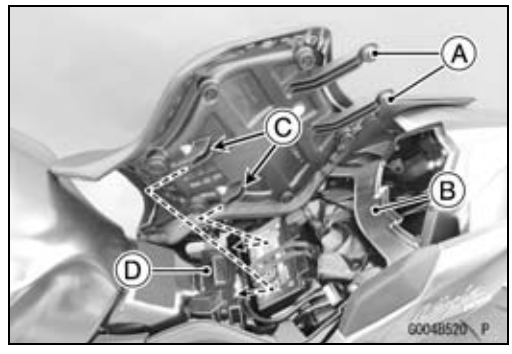

- Install the dampers and collars [A].

○Face the flange of the collar to the bottom.

- Insert the rear part of the seat under the seat cover [B].
- Insert the seat hooks [C] under the fuel tank bracket [D].
- Tighten the bolts.
- Install the seat pad (see Seat Pad Installation).

Fairings

Middle Fairing Removal

Right and Left Side

- Remove the quick rivet [A].



- Remove:
  M5 Bolts [A]
  M5 Bolts [B] and Washers

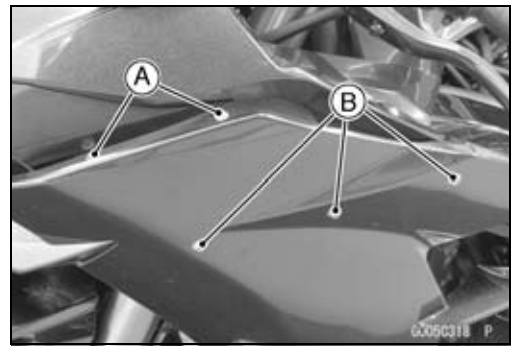

- Remove:
  M5 Bolt [A]
  M5 Bolt [B] and Washer
  M6 Bolt [C] and Washer

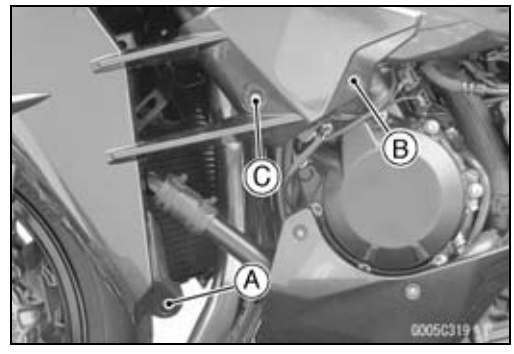

Left Side

- Disconnect the regulator/rectifier connectors [A].
- Remove the left middle fairing [B].

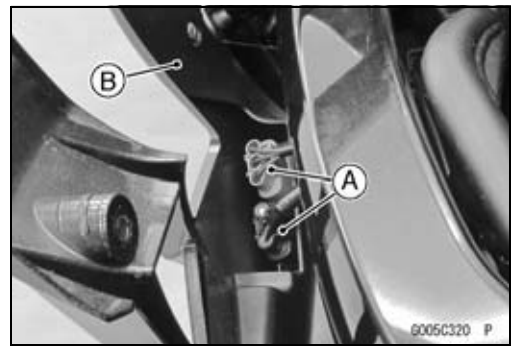

Right Side

- Pull the right middle fairing outward to clear the projection [A].

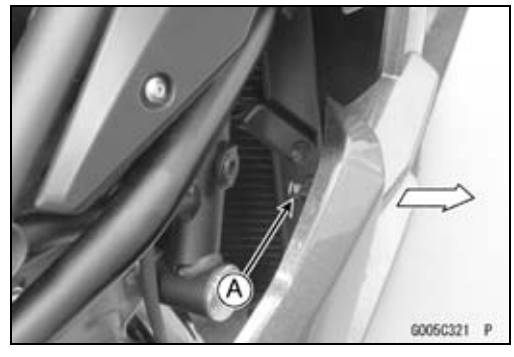

Fairings

Right Side

- Disconnect the radiator overflow hose [A].
- Remove the right middle fairing [B].
- Drain the coolant to a container.

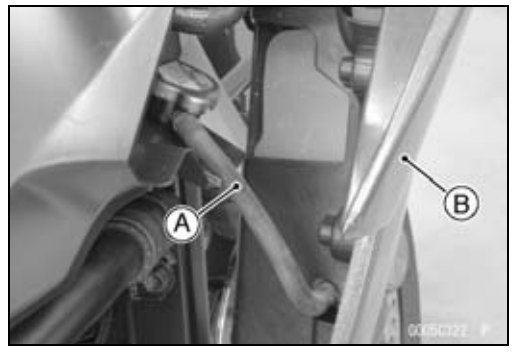

Middle Fairing Installation

Right and Left Side

- Be sure to install the pads [A].
  Viewed from Front [B]

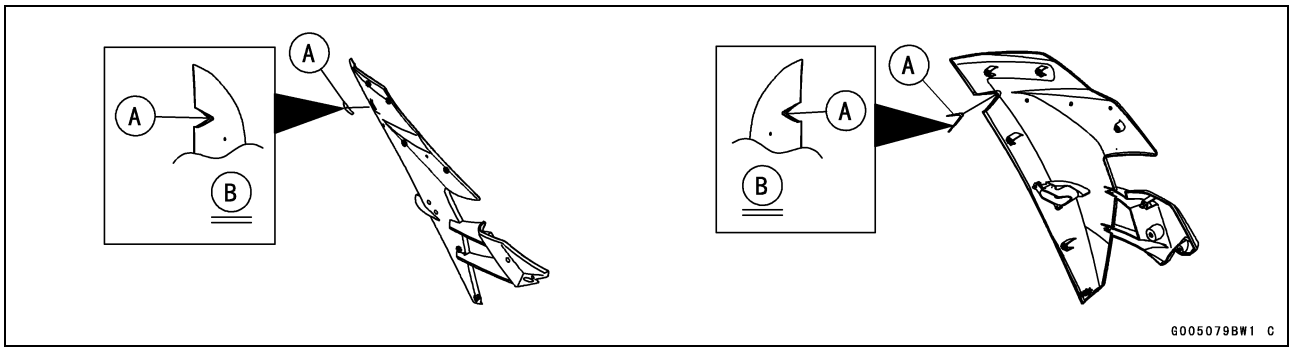

- When removing the fitting [A], replace the O-ring [B] with a new one, and apply grease to the O-ring.

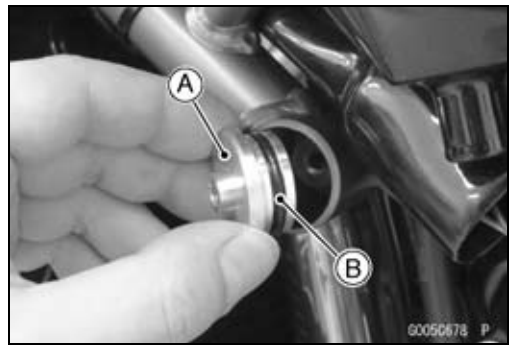

Left Side

- Run the regulator/rectifier lead correctly (see Cable, Wire, and Hose Routing section in the Appendix chapter), and connect it to the regulator/rectifier.

Right Side

- Run the radiator overflow hose correctly (see Cable, Wire, and Hose Routing section in the Appendix chapter), and add coolant to the coolant reserve tank.
- Insert the projection [A] of the middle fairing into the grommet [B] on the frame.

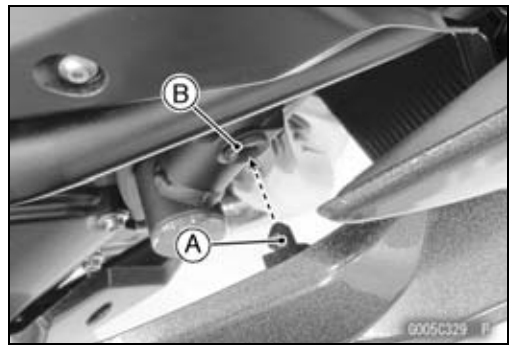

Fairings

- Tighten:
  M6 Bolt [A] and Washer
  M5 Bolt [B] and Washer
  M5 Bolt [C]

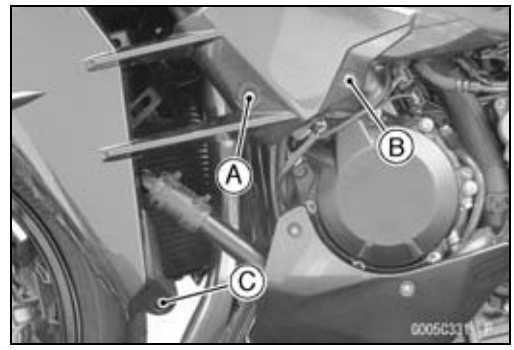

- Tighten:
  M5 Bolts [A]
  M5 Bolts [B] and Washers

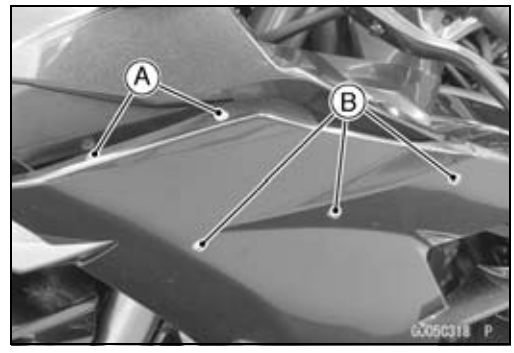

- Install the quick rivet [A].



Middle Fairing Disassembly

Left Middle Fairing

- Remove:
  Left Middle Fairing (see Middle Fairing Removal)
  Screws [A]
  Left Middle Fairing Inner Cover [B]

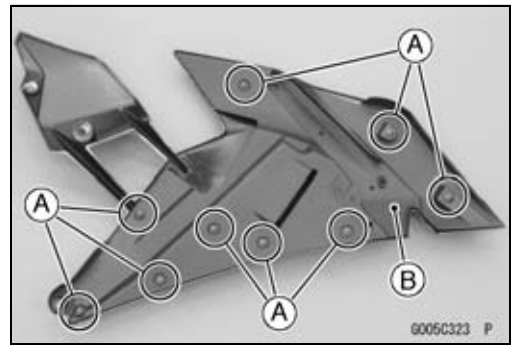

- Remove:
  Regulator/Rectifier Screws [A]
  Regulator/Rectifier and Bracket [B]

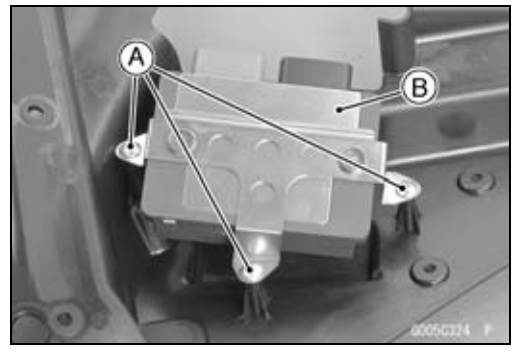

Fairings

- Remove:
  Screws [A]
  Bracket [B]
  Middle Fairing Cap [C]

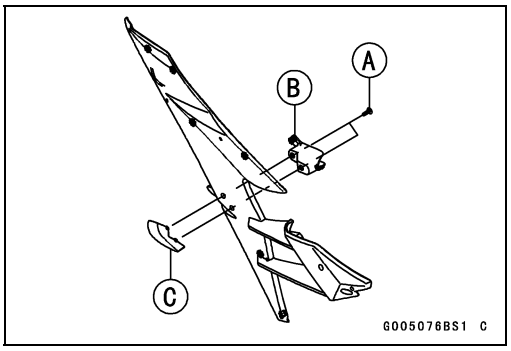

Right Middle Fairing

- Remove:
  Right Middle Fairing (see Middle Fairing Removal)
  Screws [A]
  Right Middle Fairing Inner Cover [B]

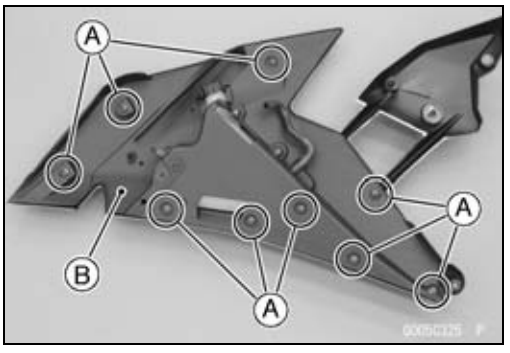

- Remove:
  Screws [A]
  Coolant Reserve Tank [B]

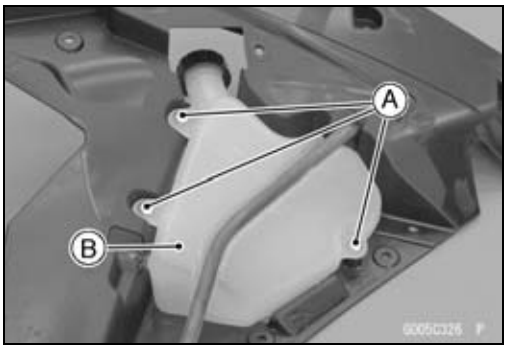

- Remove:
  Screws [A]
  Bracket [B]
  Middle Fairing Cap [C]

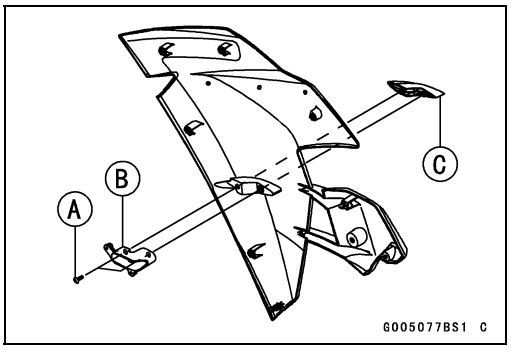

Middle Fairing Assembly

- Assembly is the reverse of disassembly.
- Tighten:

Torque - Middle Fairing Cap Screws: 1.2 N·m (0.12 kgf·m, 11 in·lb)
Coolant Reserve Tank Screws: 1.2 N·m (0.12 kgf·m, 11 in·lb)

- Run the reserve tank overflow hose [A] between the bracket [B] and right middle fairing [C].

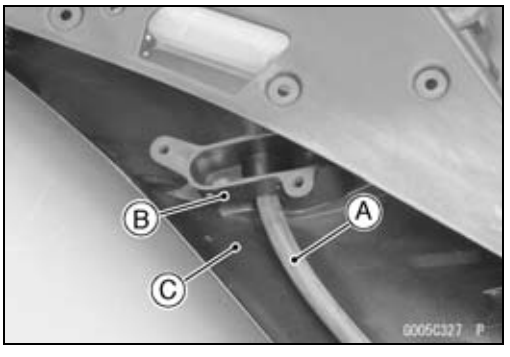

Fairings

- Install the regulator/rectifier and bracket to the left middle fairing.
- Tighten:

Torque - Regulator/Rectifier Bracket Screws [A]: 1.2 N·m (0.12 kgf·m, 11 in·lb)

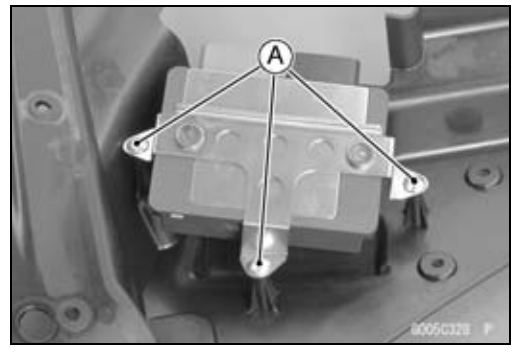

- Install the middle fairing inner covers, and tighten the screws.
  Left Middle Fairing [A]
  Right Middle Fairing [B]
  Screws, L = 16 mm (0.6 in.) [C]
  Screw, L = 10 mm (0.4 in.) [D]
- Tighten:

Torque - Middle Fairing Inner Cover Screws: 1.2 N·m (0.12 kgf·m, 11 in·lb)

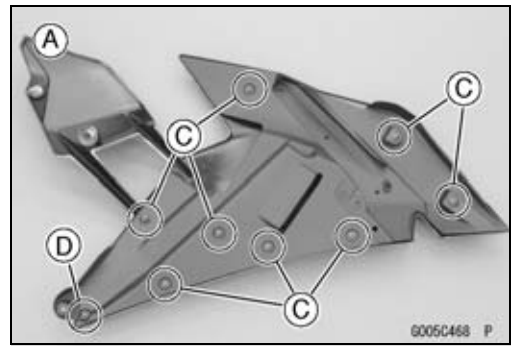

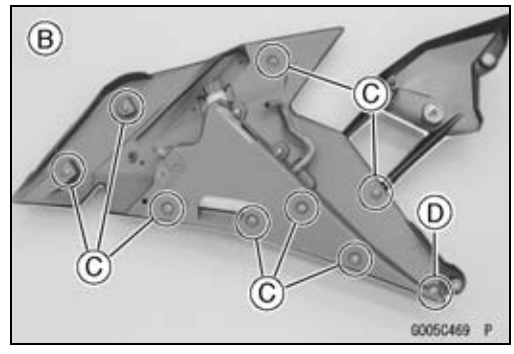

Inner Fairing Removal

- Remove:
  Upper Fairing (see Upper Fairing Removal)
- Free the front wheel rotation sensor lead [A] from the clamp [B].
- Free the main harness [C] from the clamp [D].
- Cut the band of clamp [E] to free the main harness.

NOTE

○*The clip of the clamps [D] [E] cannot reuse. Do not remove the clip if it is not necessary.*

- Remove the inner fairing [F].

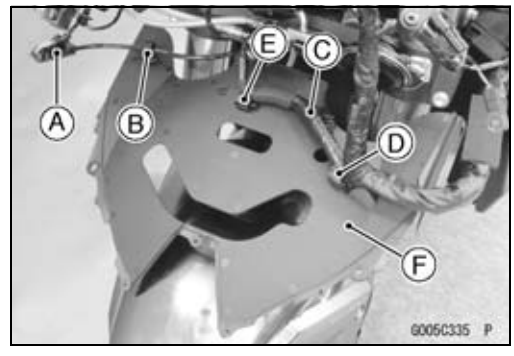

Inner Fairing Installation

- If necessary, replace the clamps with new ones.
- Run the leads, hoses and cables correctly (see Cable, Wire, and Hose Routing section in the Appendix chapter).
- Install the removed parts (see appropriate chapters).

Fairings

Inner Cover Removal

Left Inner Cover

- Remove the bolts [A].
- Pull the left inner cover upward to clear the projection [B].
- Remove the left inner cover [C].

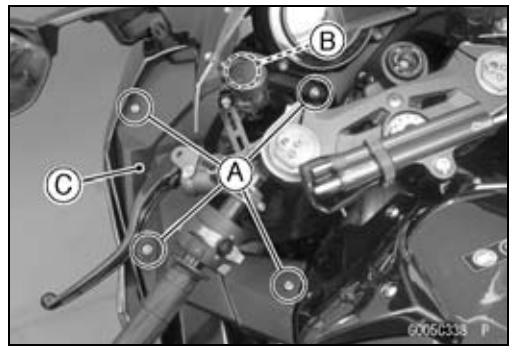

Right Inner Cover

- Remove the bolts.
  Bolts, L = 16 mm (0.6 in.) [A]
  Bolt, L = 12 mm (0.5 in.) [B]
- Pull the right inner cover upward to clear the projection [C].
- Remove the right inner cover [D].

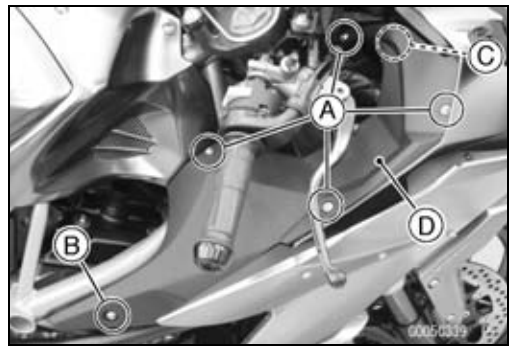

Inner Cover Installation

- On the back side of the left inner cover [A], be sure to install the pad [B] as shown.
  Front [C]

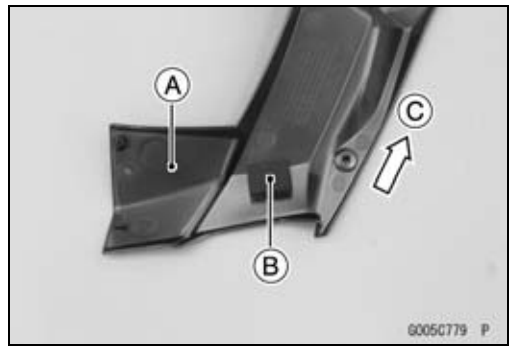

- Insert the projection [A] of the inner cover into the grommet [B] on the meter bracket.

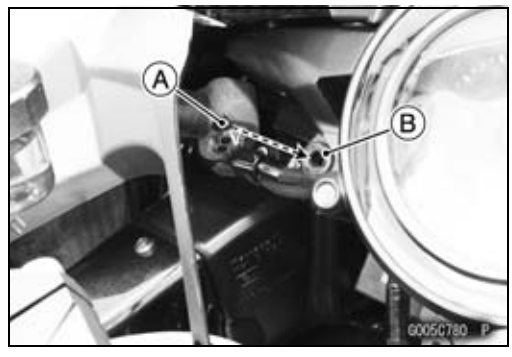

- Fit the bosses [A] of the inner cover to the holes [B] of the fuel tank cover.
- Tighten the bolts.

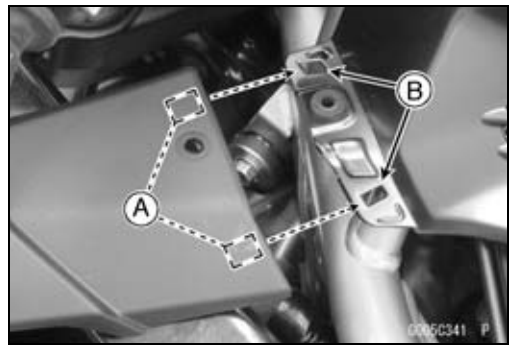

Fairings

Upper Fairing Removal

⚠ WARNING

The cooling fins at the rear of headlight become hot during normal operation and can cause serious burns. To prevent burns, never touch the cooling fins at the rear of headlight while the engine is running or shortly after it has been stopped.

- Remove:
  Windshield (see Windshield Removal)
  Rear View Mirrors (see Rear View Mirror Removal)
  Middle Fairings (see Middle Fairing Removal)
  Rear Intake Duct (see Intake Duct Removal)
  Quick Rivets [A]
- Slide the inner fairing [B] rearward to clear its edges from the upper fairing.

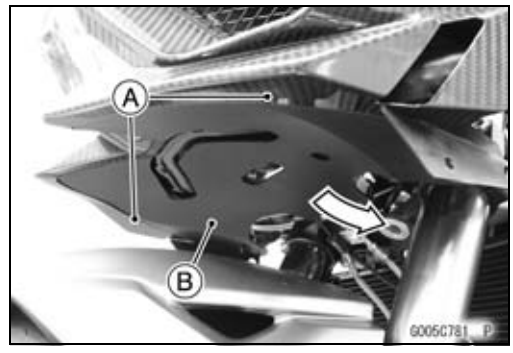

- Take the left turn signal light lead connector [A] off the bracket [B].

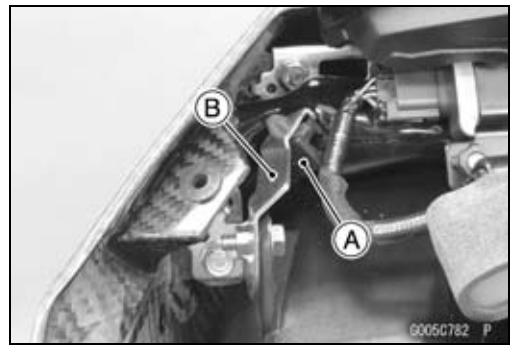

- Remove:
  Bolts [A]

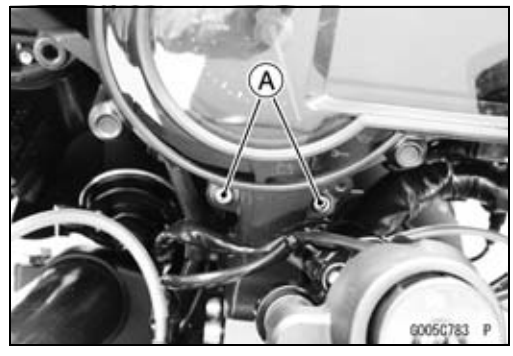

- Remove:
  Bolts [A] and Collars



Fairings

- Take the fuse box 1 [A] off the upper fairing assembly.
- Disconnect the right city light lead connector [B].

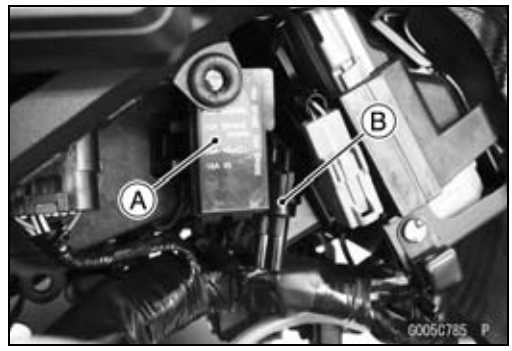

- Remove the upper fairing assembly.
- Slide the dust cover [A].
- Disconnect:
  Headlight Lead Connector [B]
  Left City Light Lead Connector [C]

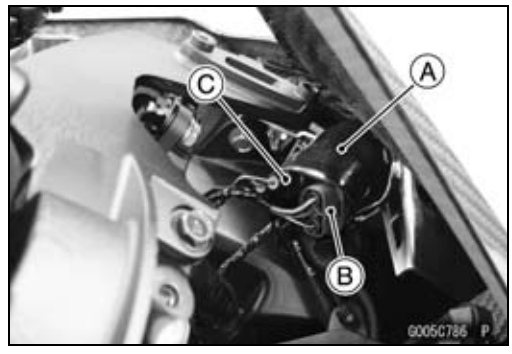

- Disconnect the immobilizer amplifier connector [A].
- Open the clamp [B] to free the front wheel rotation sensor connector [C].

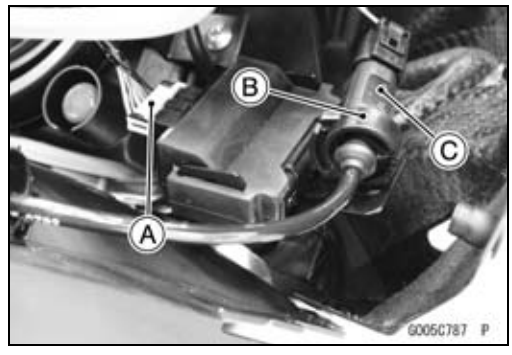

Upper Fairing Installation

- Install the inner fairing (see Inner Fairing Installation).
- Run the cables, leads and hoses correctly (see Cable, Wire, and Hose Routing section in the Appendix chapter).
- Install the upper fairing.
- Connect the connectors.
- Install the collars [A] and tighten the bolts [B].

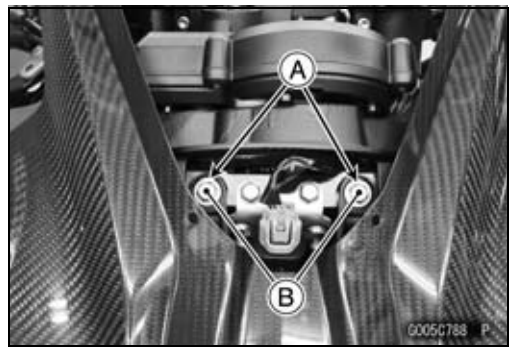

- Tighten the bolts [A].

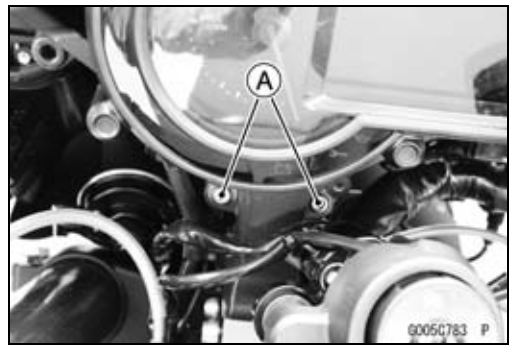

Fairings

● Insert the inner fairing [A] to the upper fairing [B].
○Place the tabs [C] on the upper fairing above the inner fairing (other than special edition).

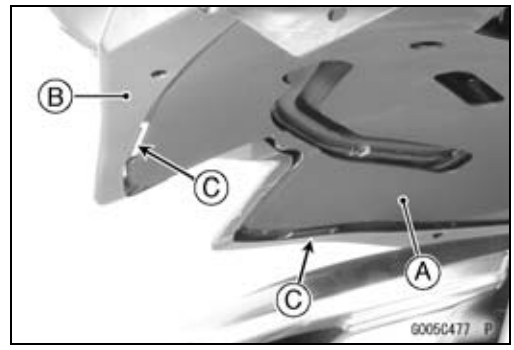

Upper Fairing Disassembly

⚠ WARNING

The cooling fins at the rear of headlight become hot during normal operation and can cause serious burns. To prevent burns, never touch the cooling fins at the rear of headlight while the engine is running or shortly after it has been stopped.

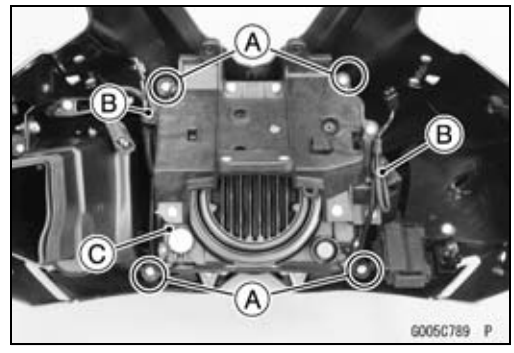

● Remove:
Upper Fairing Assembly (see Upper Fairing Removal)
Headlight Screws [A]
Clamps [B]
Headlight Unit (LED) [C]

Other than Spacial Edition

● Remove:
Upper Fairing Cover Screws [A]
Right Upper Fairing Cover [B]

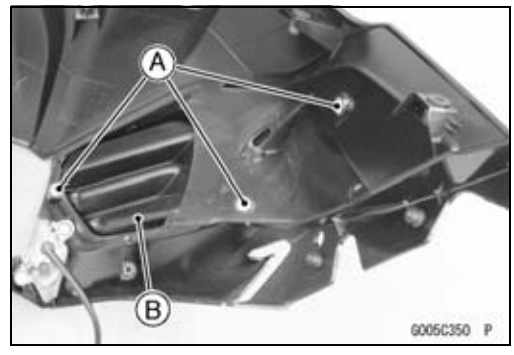

● Remove:
Front Intake Duct Bolts [A]
Front Intake Duct [B]

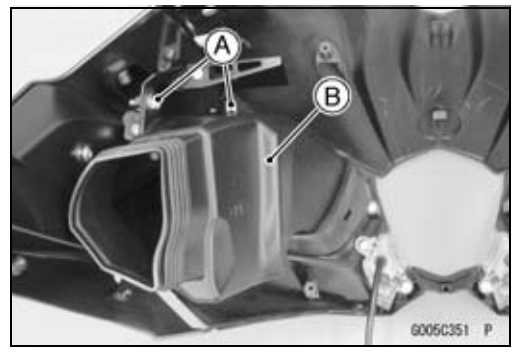

Fairings

Other than Spacial Edition

- Remove:
  Upper Fairing Cover Screws [A]
  Left Upper Fairing Cover [B]

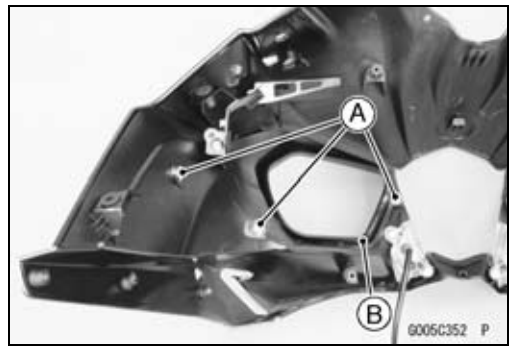

- Remove:
  City Light Screws [A]
  City Lights (LED) [B]

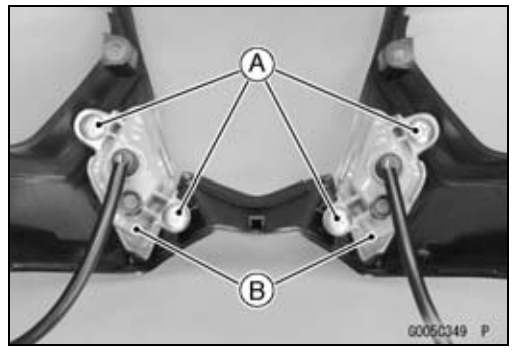

Upper Fairing Assembly

Other than Special Edition

- Be sure to install the wellnuts [A] and pad [B].
  Front [C]

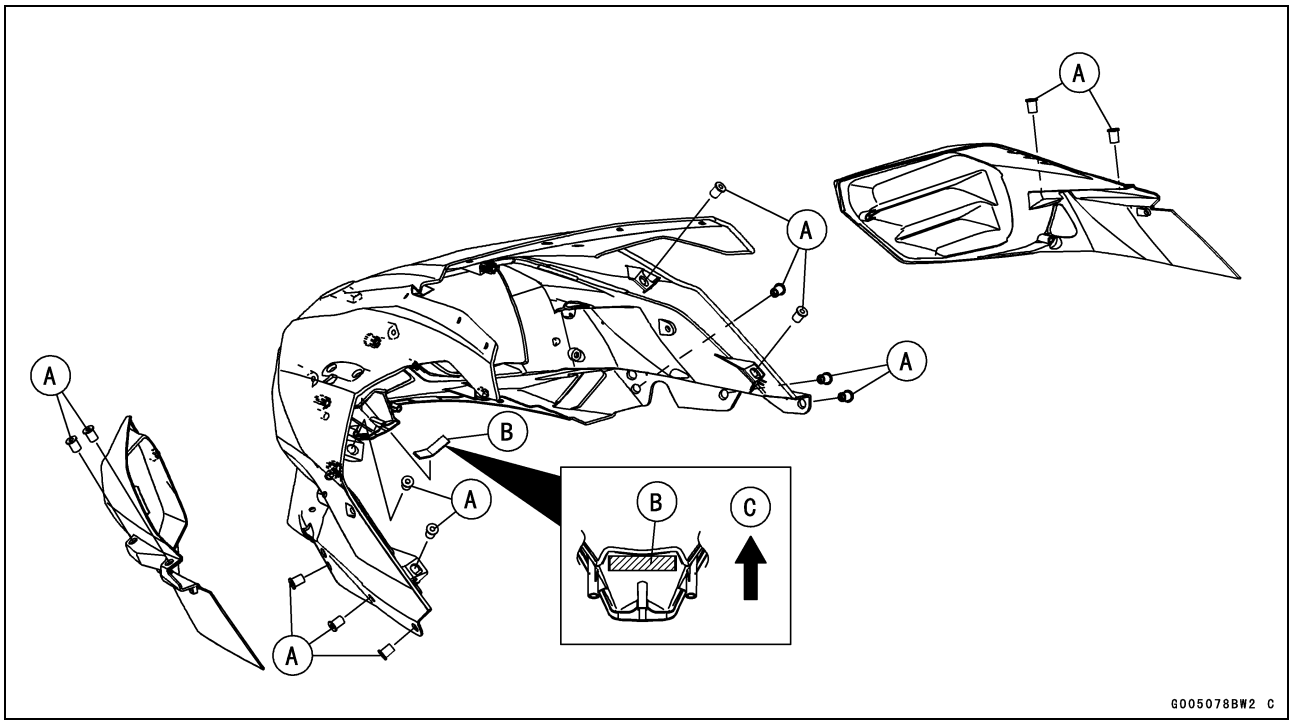

Fairings

Special Edition

● Be sure to install the wellnuts [A], nuts [B] and pad [C].
Front [D]

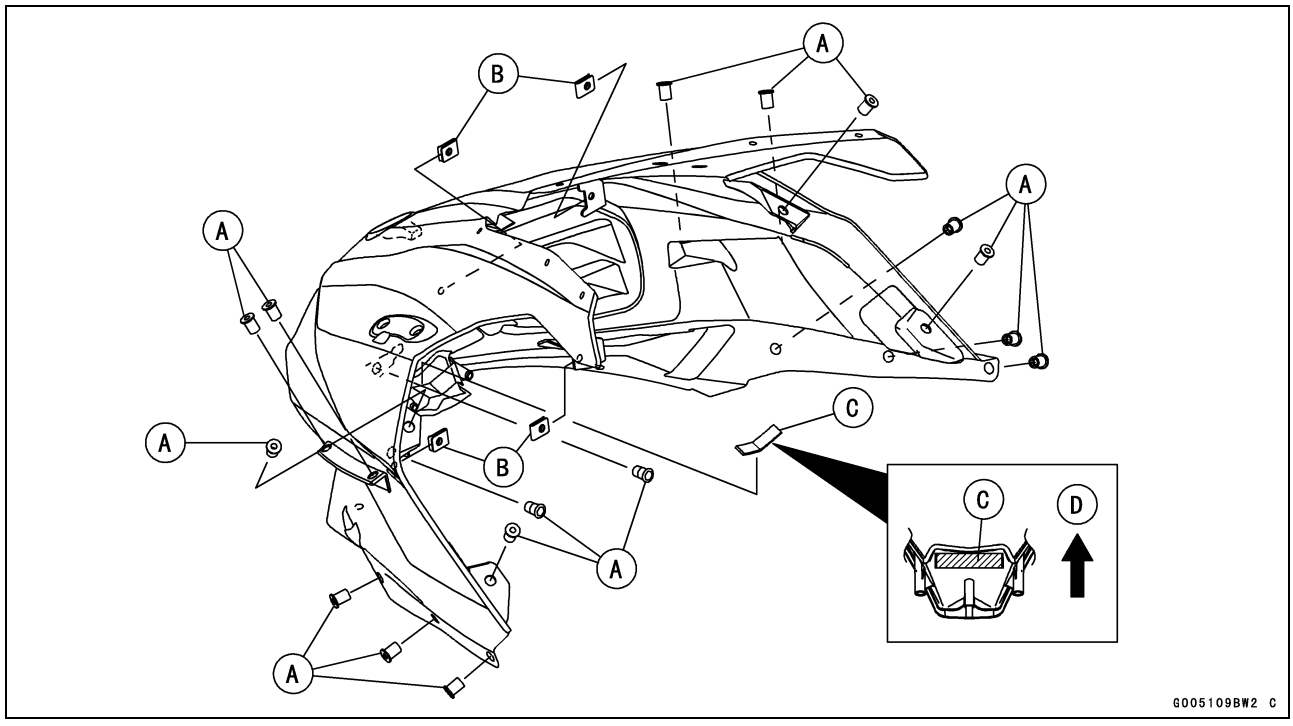

● Install the brackets [A] to the left side of the upper fairing.
○Fit the projection [B] on the brackets to the holes of the upper fairing.
● Apply a non-permanent locking agent to the intake duct bracket bolts [C] (Special Edition).
● Tighten:

Torque - Intake Duct Bracket Screws (Other than Special Edition): 1.2 N·m (0.12 kgf·m, 11 in·lb)
Intake Duct Bracket Bolts (Special Edition): 5.0 N·m (0.51 kgf·m, 44 in·lb)

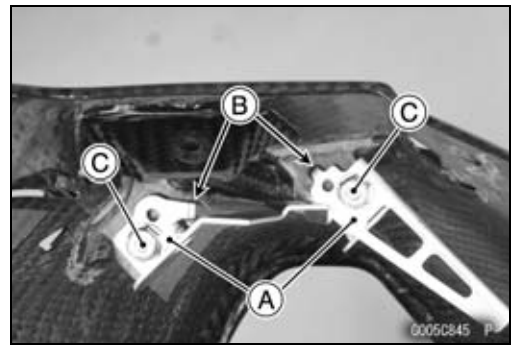

● Install the city lights (LED) [A].
● Tighten:

Torque - City Light Mounting Screws [B]: 1.2 N·m (0.12 kgf·m, 11 in·lb)

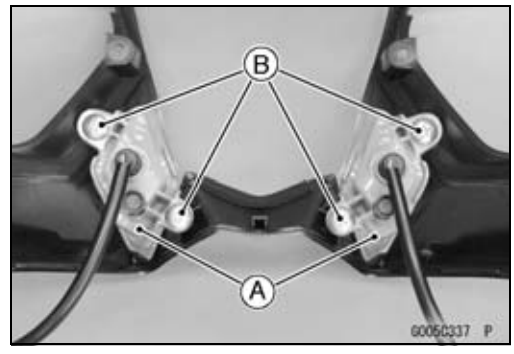

Fairings

Other than Spacial Edition

● Install the left upper fairing cover [A].

○Insert the tab [B] of cover into the slot [C] of upper fairing.

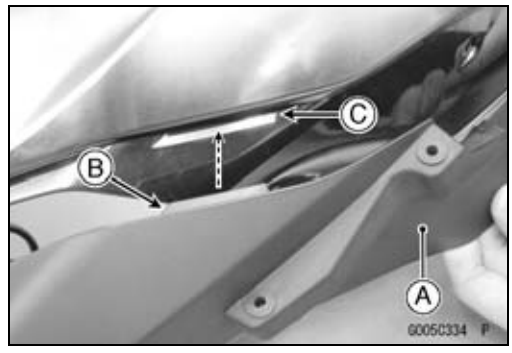

Other than Spacial Edition

● Tighten:

Torque - Upper Fairing Cover Screws [A]: 1.2 N·m (0.12 kgf·m, 11 in·lb)

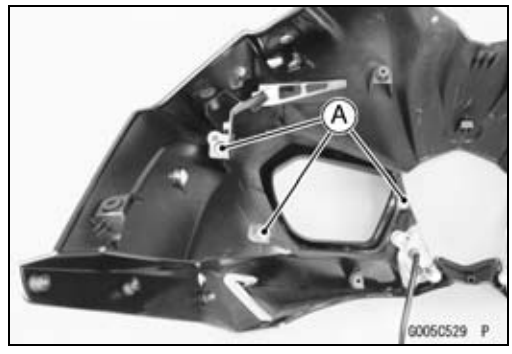

● Install the screen [A], screen cover [B], seal [C] and well-nut [D] to the front intake duct [E].

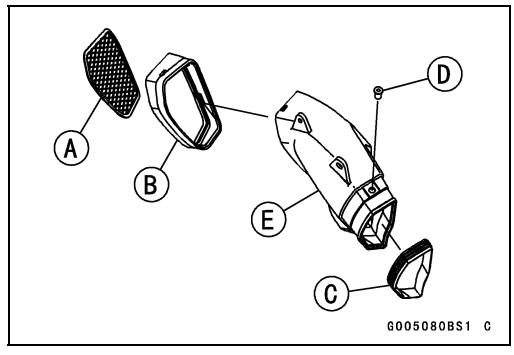

○Fit the holes [A] on the screen cover [B] to the hooks [C] of the front intake duct [D].

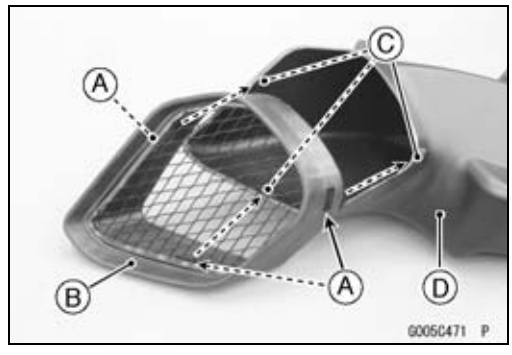

● Install the front intake duct assembly [A].

● Tighten:

Torque - Front Intake Duct Bolts [B]: 7.0 N·m (0.71 kgf·m, 62 in·lb)

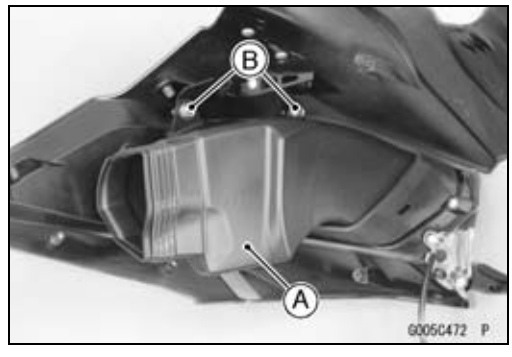

Fairings

Other than Spacial Edition

● Install the right upper fairing cover [A].

○Insert the tab [B] of cover into the slot [C] of upper fairing.

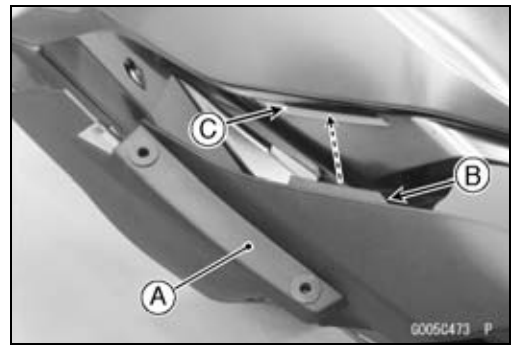

Other than Spacial Edition

● Tighten:

Torque - Upper Fairing Cover Screws [A]: 1.2 N·m (0.12 kgf·m, 11 in·lb)

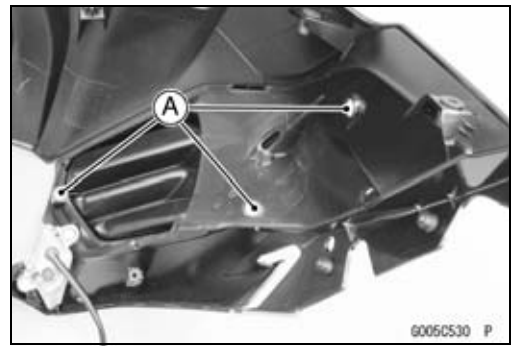

● Install the headlight unit [A] and clamps [B].

● Run the headlight lead and city light lead correctly (see Cable, Wire, and Hose Rouring section in the Appendix chapter).

● Tighten:

Torque - Headlight Unit Mounting Screws [C] (Other than Special Edition): 1.2 N·m (0.12 kgf·m, 11 in·lb)
Headlight Unit Mounting Bolts (Special Edition): 3.0 N·m (0.31 kgf·m, 27 in·lb)

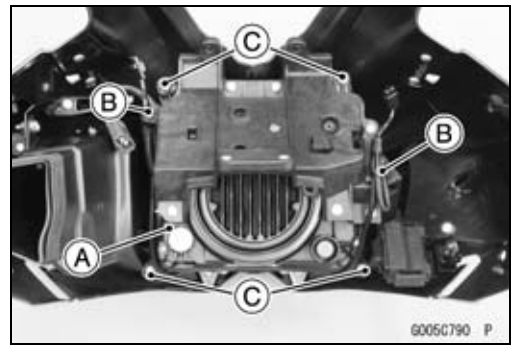

Lower Fairing Removal

● On the left side, remove the bolts [A] and washers.

● Remove the left lower fairing [B].

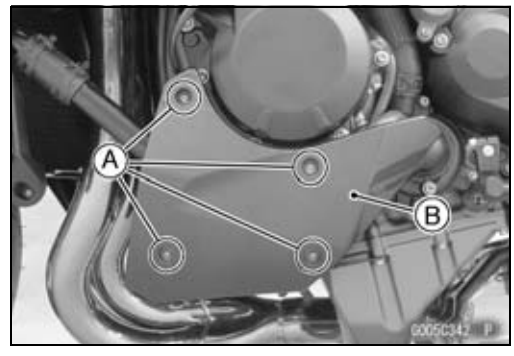

● On the right side, remove the bolts [A] and washers.

● Remove the right lower fairing [B].

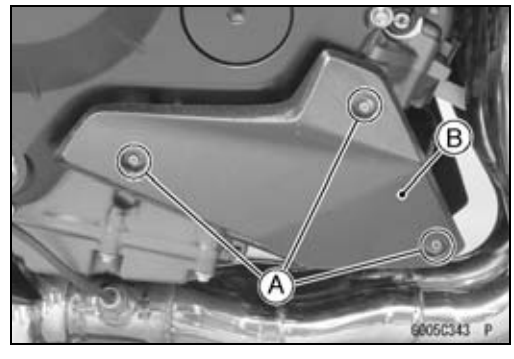

Fairings

Lower Fairing Installation

- Install:
  Bracket [A]
  Left Lower Fairing [B]
  Right Lower Fairing [C]

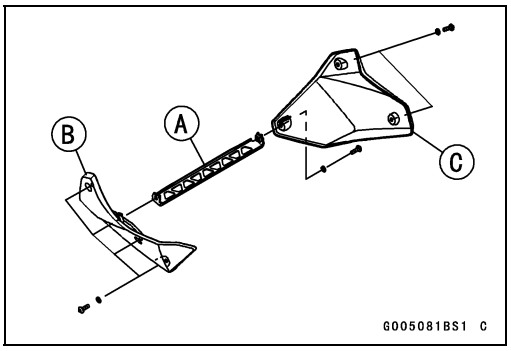

- Fit the rib [A] of the lower fairing to the groove [B] of the bracket.
- Install the washers, and tighten the bolts.

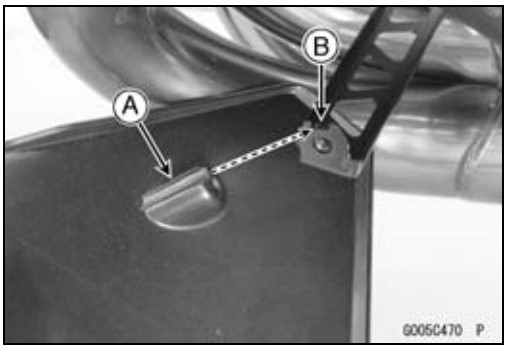

Intake Duct Removal

Rear Intake Duct

- Remove:
  Left Middle Fairing (see Middle Fairing Removal)
  Left Inner Cover (see Inner Cover Removal)
  Intake Duct Connecting Bolt [A] and Washer

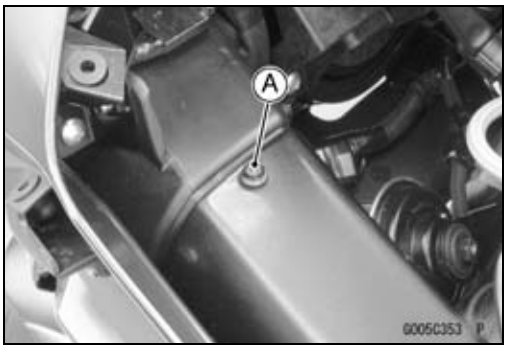

- Remove:
  Rear Intake Duct Bolts [A] and Washers

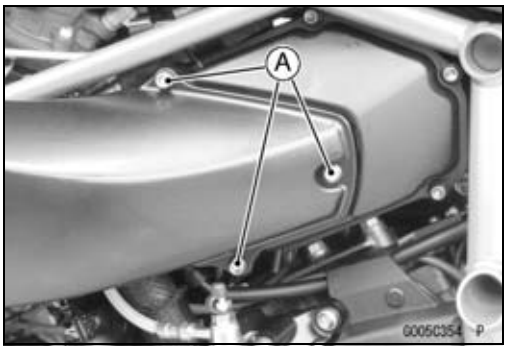

- Pull the rear intake duct [A] outward to clear the projection [B].
- Pull the rear intake duct rearward to remove it from the front intake duct.

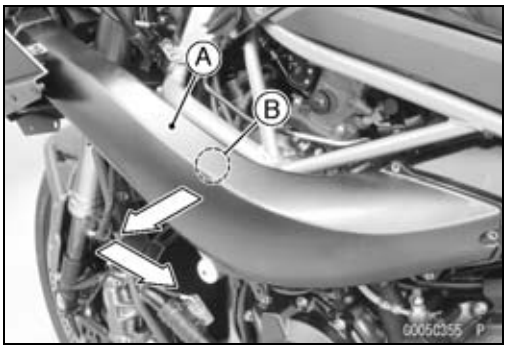

Front Intake Duct

- Refer to the Upper Fairing Disassembly.

Fairings

Intake Duct Installation

Rear Intake Duct

- Install the seal [A] to the rear intake duct [B].
- Insert the rear intake duct to the front intake duct [C].

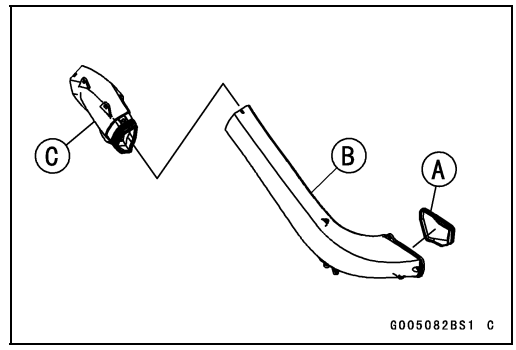

- Insert the ribs [A] of the rear intake duct to the heat insulation plate [B].
- Insert the projection [C] of the rear intake duct into the grommet [D] on the frame.

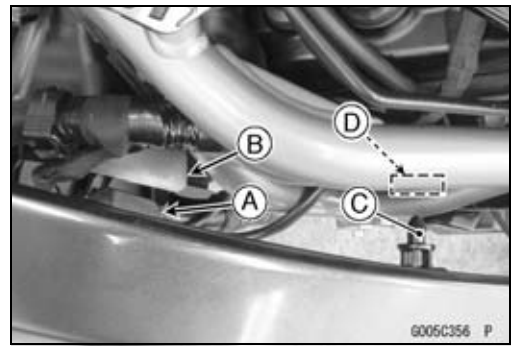

- Install the washers [A] and tighten the bolts.

Torque - Intake Duct Connecting Bolt [B]: 0.50 N·m (0.05 kgf·m, 4.4 in·lb)
Rear Intake Duct Bolts [C]: 6.0 N·m (0.61 kgf·m, 53 in·lb)

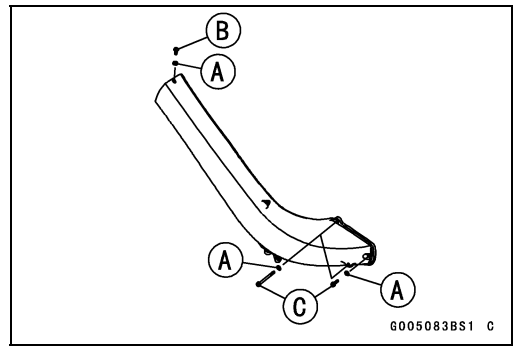

Front Intake Duct

- Refer to the Upper Fairing Assembly.

Side Covers

Fuel Tank Cover Removal

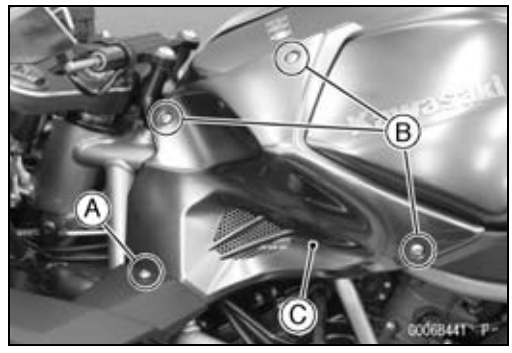

- Remove:
  Bolt [A]
  Bolts [B] and Washers
- Remove the fuel tank cover [C].

Fuel Tank Cover Installation

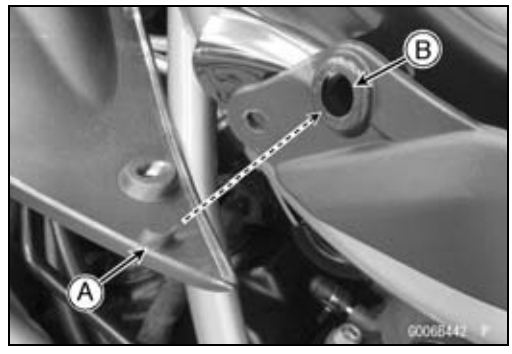

- Fit the boss [A] of the fuel tank cover to the hole [B] of the side cover.

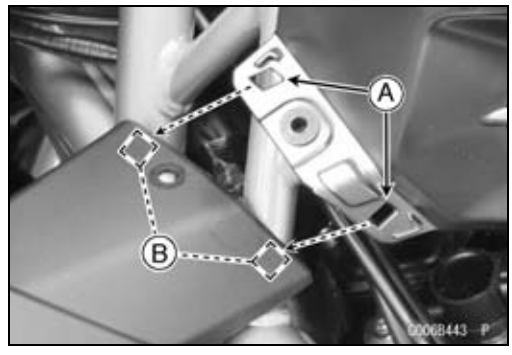

- Fit the holes [A] of the fuel tank cover to the bosses [B] of the inner cover.
- Install the bolts and washers and tighten them.



- Tighten the bolts.
  Bolts, L = 12 mm (0.4 in.) [A] and Washers
  Bolt, L = 16 mm (0.5 in.) [B] and Washer
  Bolt, L = 16 mm (0.5 in.) [C]

Side Cover Removal

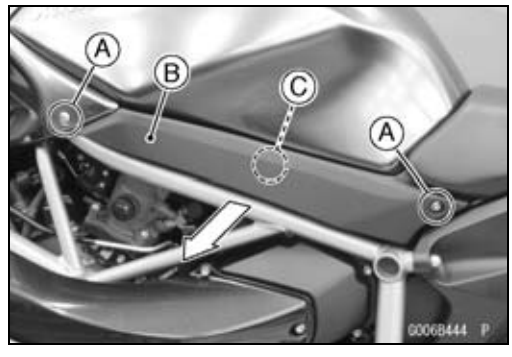

- Remove:
  Bolts [A] and Washers
- Pull the side cover [B] outward to clear the projection [C].

Side Covers

Side Cover Installation

- Fit the hole [A] of the side cover to the boss [B] of the fuel tank cover.

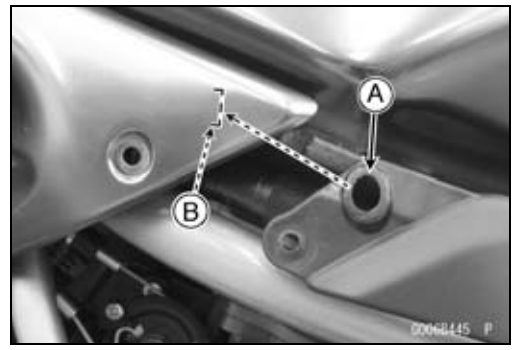

- Fit the projection [A] of the side cover into the grommet [B] on the fuel tank.

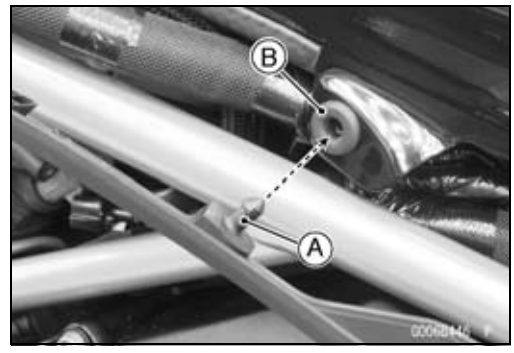

- Install the washers and tighten the bolts.
  Bolt, L = 16 mm (0.5 in.) [A]
  Bolt, L = 12 mm (0.4 in.) [B]

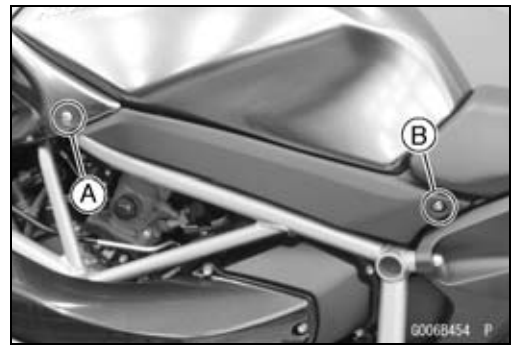

Seat Covers

Hip Support Cover Position Adjustment

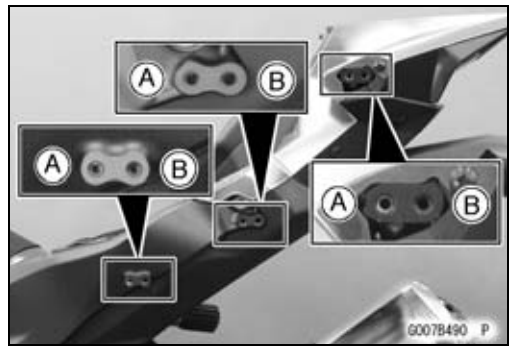

○The hip support cover can be adjusted within 2 positions to suit the rider's preference.
Bolt Holes for Position 1 [A] (when shipping)
Bolt Holes for Position 2 [B]

- Remove the hip support cover outer (see Hip Support Cover Removal).
- Remove:
  Bolts [A]
  Bolt [B] and Washer
  Hip Support Cover Inner [C]
- Adjust the hip support cover position.

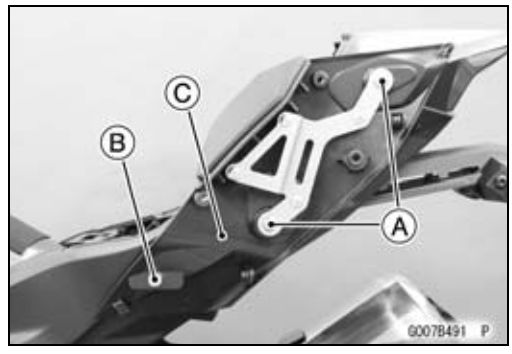

NOTE

○*Install the hip support covers with same position on both sides.*

- Tighten the bolts.
- Install the hip support cover outer (see Hip Support Cover Installation).

Hip Support Cover Removal

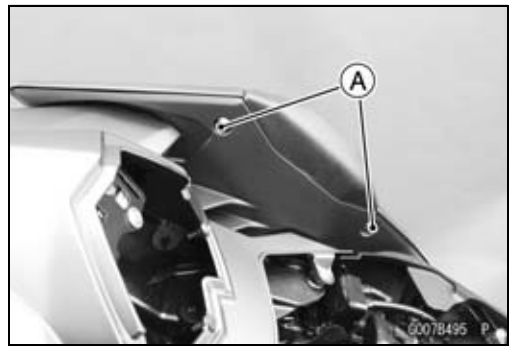

- Remove:
  Seat Pad (see Seat Pad Removal)
  Seat (see Seat Removal)
  Bolts [A]

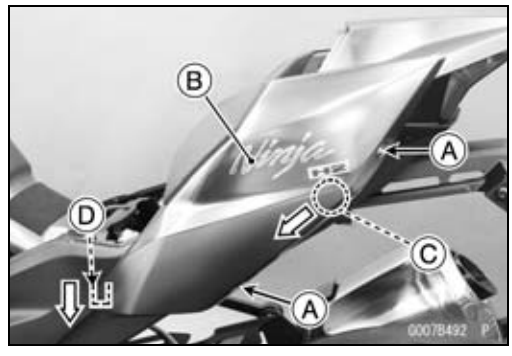

- Remove the bolts [A] and Washers.
- Pull the rear part of the hip support cover outer [B] outward to clear the projection [C].
- Pull the front part of the hip support cover outer downward to clear the hook [D].
- Remove the hip support cover outer.

Seat Covers

- Remove:
  Bolts [A]
  Bolt [B] and Washer
  Hip Support Cover Inner [C]

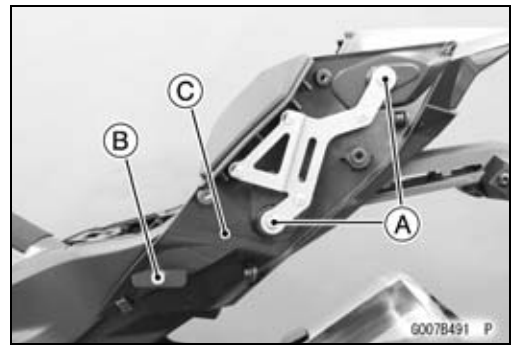

Hip Support Cover Installation

- Install:
  Hip Support Cover Inner [A]
  Washer [B]
- Tighten the bolts.
  M5 Bolt [C]
  M6 Bolts [D]

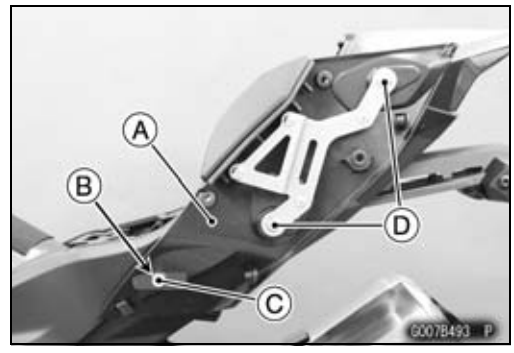

- Insert the hook [A] of the hip support cover outer into the hook [B] of the hip support cover inner.

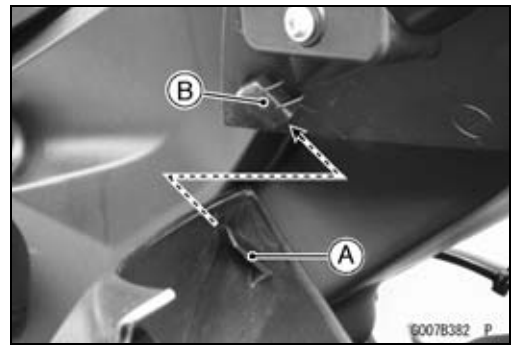

- Insert the projection [A] of the hip support cover outer into the grommet [B] on the hip support cover inner.
- Install the washers and tighten the bolts.
- Install the removed parts (see appropriate chapters).

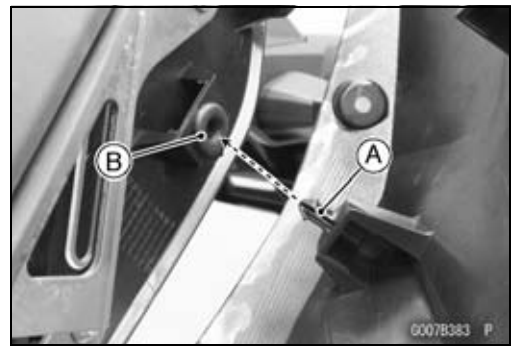

Seat Covers

Hip Support Cover Disassembly

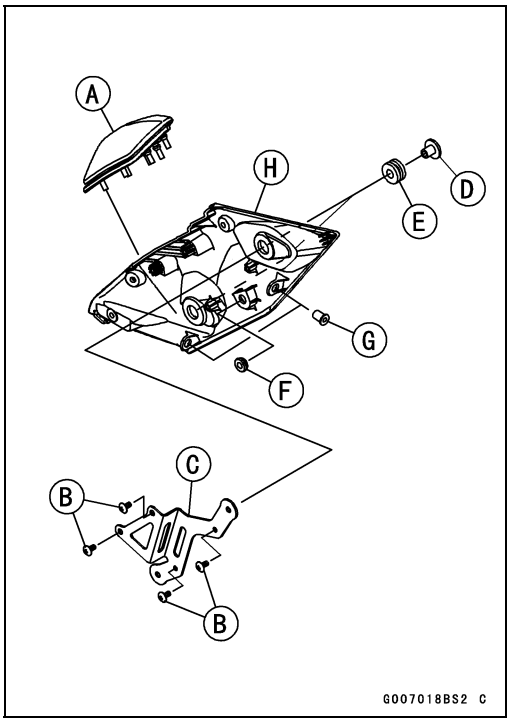

- Remove:
  Hip Support Cover (see Hip Support Cover Removal)
  Hip Support [A]
  Screws [B]
  Bracket [C]
  Collars [D]
  Dampers [E]
  Grommet [F]
  Wellnuts [G]
  Hip Support Cover Inner [H]

Hip Support Cover Assembly

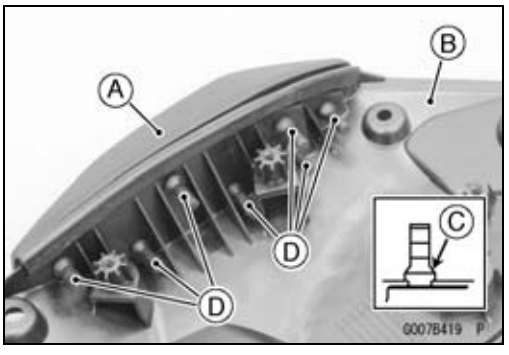

- Install:
  Hip Support [A]
  Hip Support Cover Inner [B]

○Be sure to install the flange [C] of the projections [D] fully as shown.

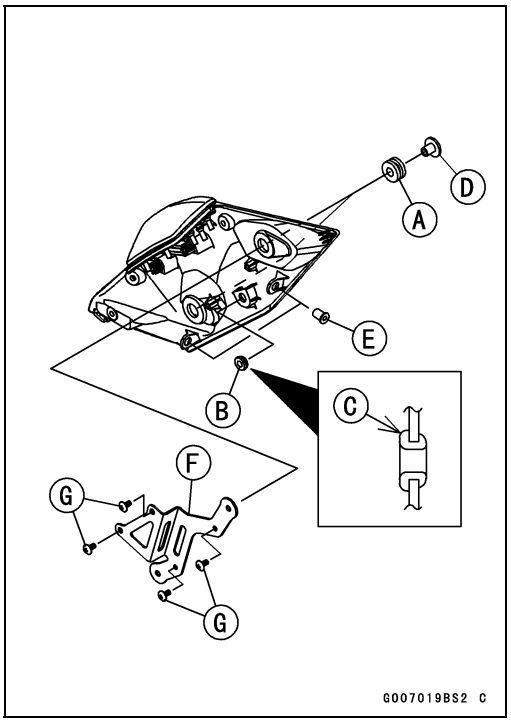

- Install:
  Dampers [A]
  Grommet [B]

○Face the large diameter side [C] of grommet toward the hip support cover outer.

- Install:
  Collars [D]
  Wellnuts [E]
  Bracket [F]
- Tighten:

Torque - Hip Support Cover Bracket Screws [G]: 1.2 N·m (0.12 kgf·m, 11 in·lb)

Seat Covers

Seat Cover Removal

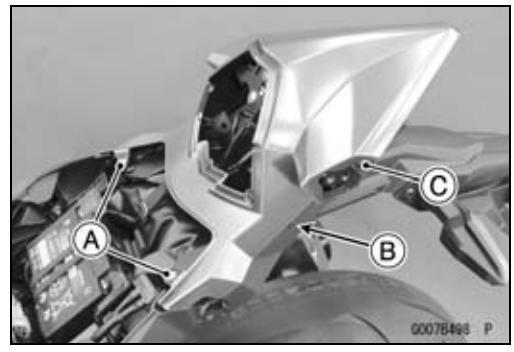

- Remove:
  Seat Pad (see Seat Pad Removal)
  Seat (see Seat Removal)
  Hip Support Covers (see Hip Support Cover Removal)
  Bolts [A] and Washers
  Quick Rivet [B] (Both Sides)
  Screw [C] (Both Sides)

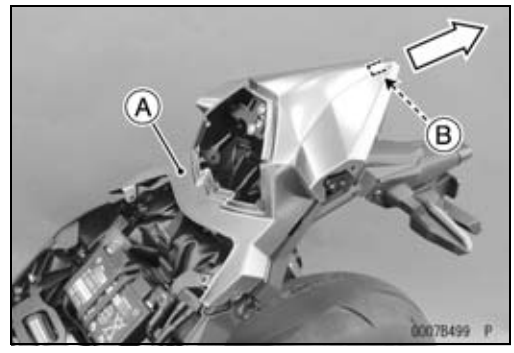

- Slide the seat cover [A] rearward to clear the hook [B].

Seat Cover Installation

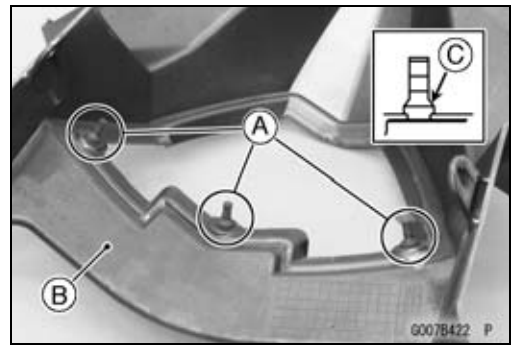

- Install the dampers [A] to the seat cover [B].

○Be sure to install the flange [C] of the dampers fully as shown.

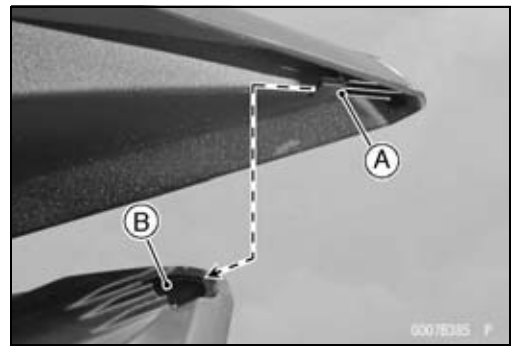

- Insert the hook [A] of the seat cover into the hole [B] of the tail/brake light cover.
- Install:
  Screws
  Quick Rivets
  Bolts and Washers
- Install the removed parts (see appropriate chapters).

Fenders

Front Fender Removal

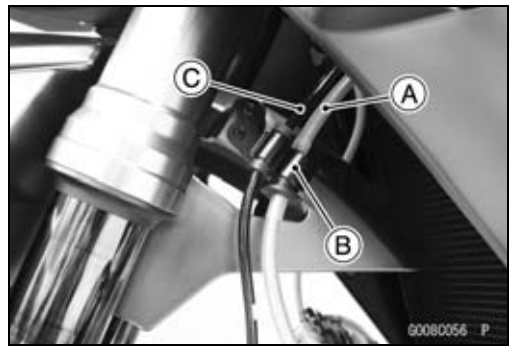

- Remove:
  Front Wheel (see Front Wheel Removal in the Wheels/Tires chapter)
- Free the brake hose [A] from the clamp [B] on both sides.
- Free the front wheel rotation sensor lead [C] from the clamp.

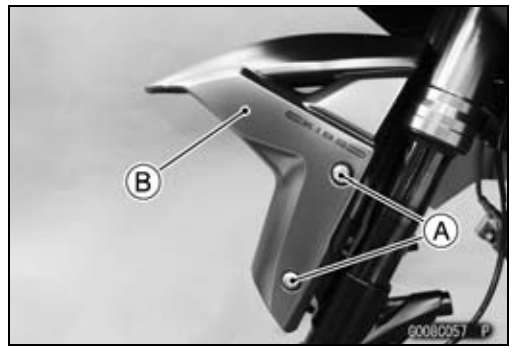

- Remove:
  Reflectors (Equipped Models)
  Bolts [A] and Washers (Both Sides)
  Front Fender [B]

Front Fender Installation

- Installation is the reverse of removal.
- Apply a non-permanent locking agent to the front fender bolts.
- Tighten:

Torque - Front Fender Mounting Bolts: 3.9 N·m (0.40 kgf·m, 35 in·lb)

- Run the leads and hoses correctly (see Cable, Wire, and Hose Routing section in the Appendix chapter).

Flap Removal

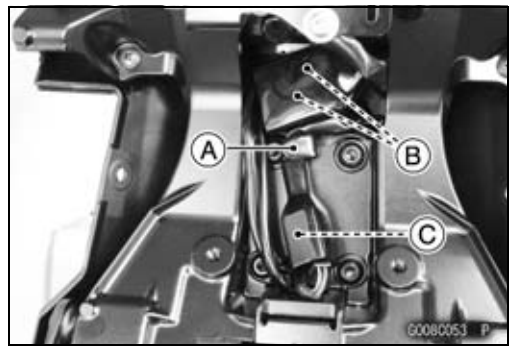

- Remove:
  Seat Pad (see Seat Pad Removal)
  Seat (see Seat Removal)
  Hip Support Covers (see Hip Support Cover Removal)
  Seat Cover (see Seat Cover Removal)
- Open the clamp [A].
- Disconnect:
  Rear Turn Signal Light Lead Connectors [B]
  License Plate Light Lead Connector [C]

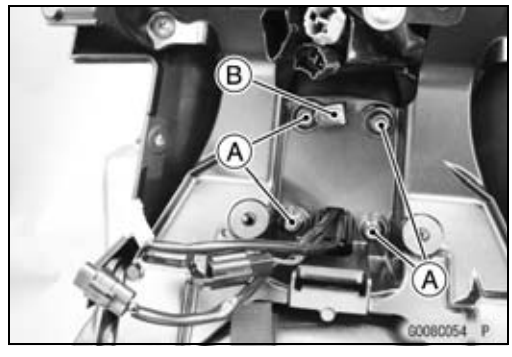

- Remove:
  Flap Mounting Bolts [A], Washers and Clamp [B]
  Flap Assembly

Fenders

Flap Installation

- Install the flap assembly [A].
- Run the rear turn signal light leads and license plate light lead through the rear fender.
- Apply a non-permanent locking agent to the flap mounting bolts [B].
- Install the clamp [C] and washers [D], and tighten the flap mounting bolts following specified tightening sequence.

Tightening Sequence:

[1 → 2 → 3 → 4 → 1 → 2 → 3 → 4]

Front [E]
Left [F]
Right [G]

- Install the removed parts (see appropriate chapters).

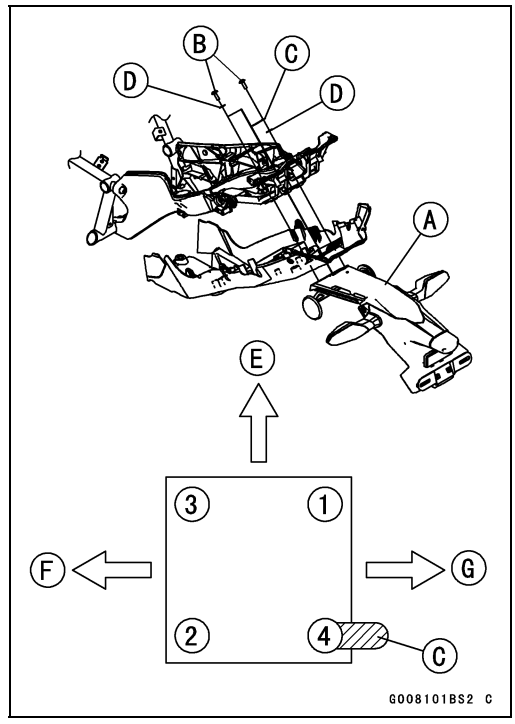

Flap Disassembly

- Remove:
  Flap Assembly (see Flap Removal)
  Bolts [A] and Reflector Assembly [B] (Equipped Models)
  Bolts [C]
  Washer [D]
  Cover [E]

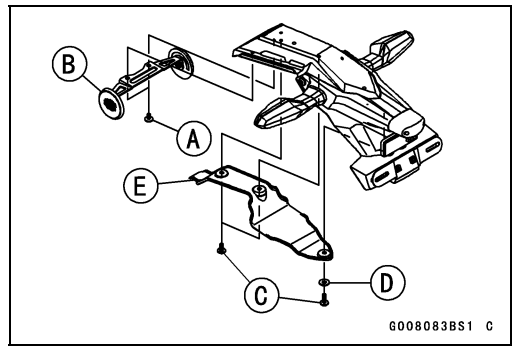

- Cut the band of clamps [A] from the flap bracket to free the turn signal light leads.

NOTE

○*The clip of the clamp cannot reuse. Do not remove the clip if it is not necessary.*

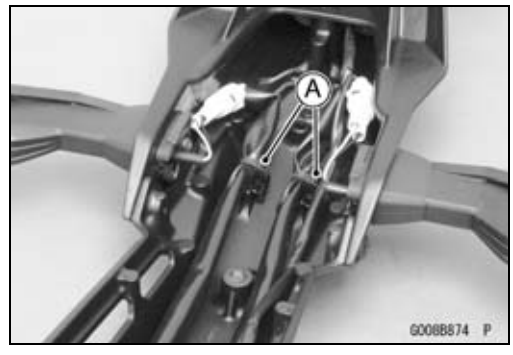

- Remove:
  Bolts [A]
  Flap Bracket [B]
  Flap [C]

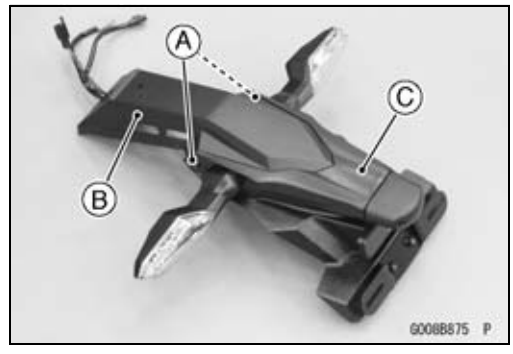

Fenders

● Remove:
License Plate Light Screws [A]
Washers [B]
Dampers [C]
License Plate Light [D]
Screw [E] (Both Sides)
Washers [F] (Both Sides)
Turn Signal Light [G] (Both Sides)
Bolts [H]
License Plate Bracket [I]
Nut [J]
Reflector [K]

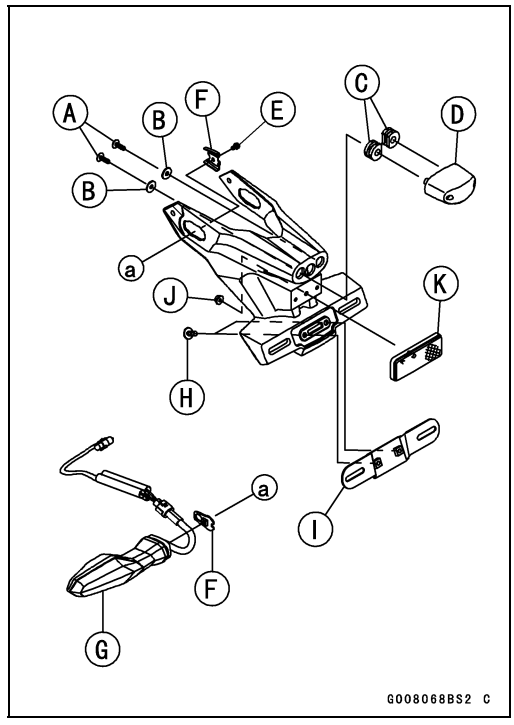

Flap Assembly

● Apply a non-permanent locking agent to the bolts [A].
● Install the license plate bracket [B] and tighten the bolts.
● Install the reflector [C] and tighten the nut [D].

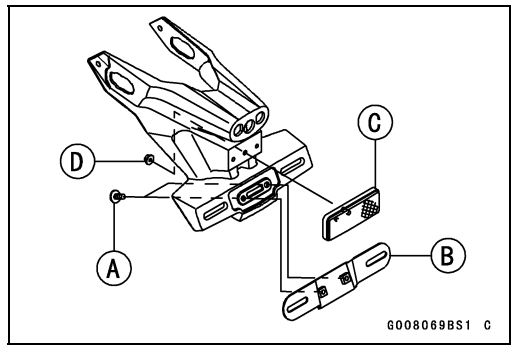

● Install:
Dampers [A]
Washers [B]
License Plate Light [C]

○Be sure to install the groove of the damper to the hole edge of the flap [D] completely.

● Tighten:

Torque - License Plate Light Mounting Screws [E]: 1.2 N·m (0.12 kgf·m, 11 in·lb)

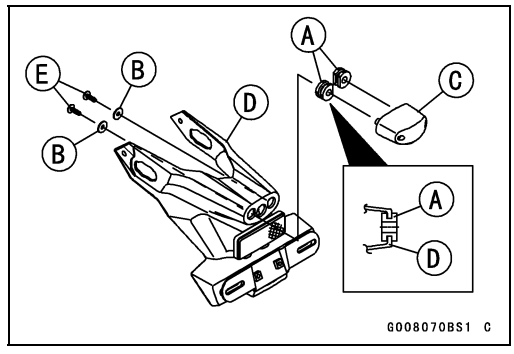

● Install:
Turn Signal Lights [A]
Washers [B]

○Be sure to install the groove of the turn signal light to the hole edge of the flap completely.

● Tighten:

Torque - Rear Turn Signal Light Mounting Screws [C]: 1.2 N·m (0.12 kgf·m, 11 in·lb)

● Run the leads correctly (see Cable, Wire, and Hose Routing section in the Appendix chapter).

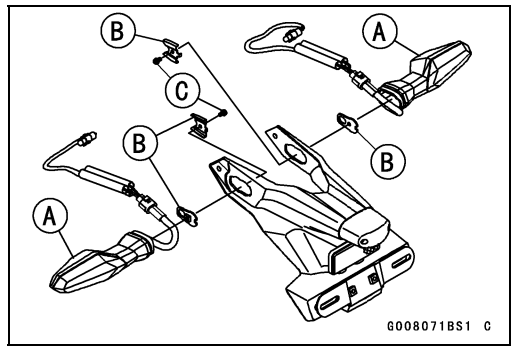

Fenders

- Apply a non-permanent locking agent to the following bolts.
  Bolt, L = 18 mm (0.71 in.) [A]
  Bolts, L = 14 mm (0.55 in.) [B]
- Install:
  Washer [C]
  Flap Bracket [D]
  Reflector Assembly [E] (Equipped Models)
  Cover [F]
- Tighten the bolts.

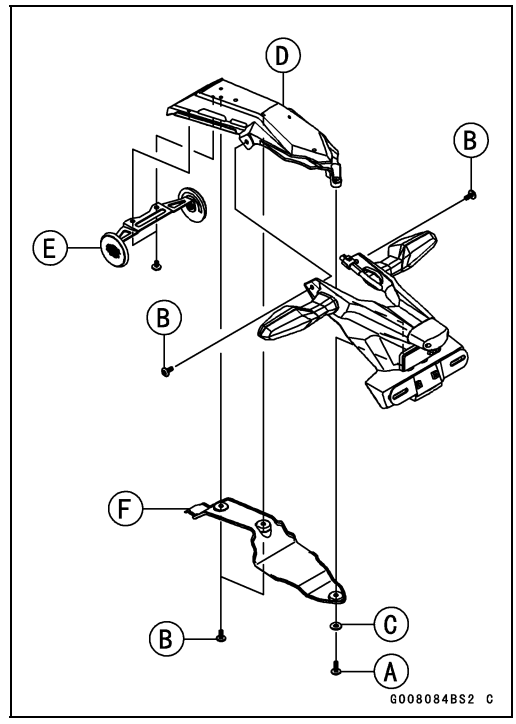

Rear Fender Removal

- Remove:
  Flap Assembly (see Flap Removal)
  Fuel Tank (see Fuel Tank Removal in the Fuel System (DFI) chapter)
  Tail/Brake Light (LED) (see Tail/Brake Light (LED) Removal in the Electrical System chapter)
  Battery (see Battery Removal in the Electrical System chapter)
- Remove the rear fender screws [A].

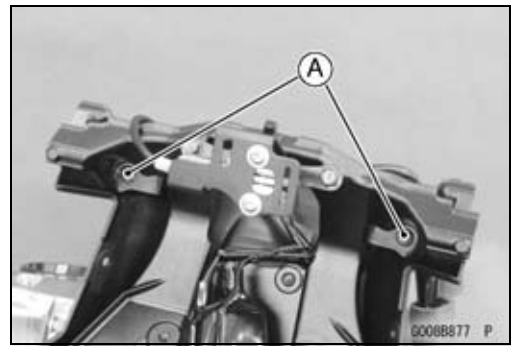

- Remove the screw [A] to free the clamp.
- Free the fuse box 2 [B] and the starter relay [C] from the rear fender.
- Remove the rear fender mounting bolts [D].

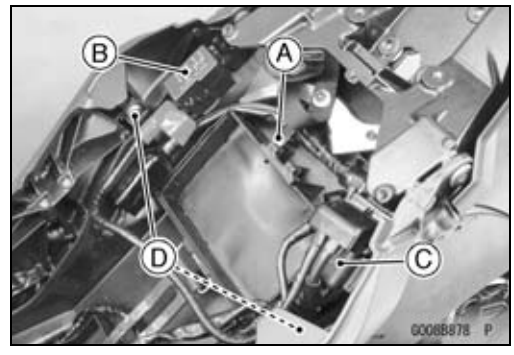

Fenders

● Free the seat lock cable [A] from the seat lock [B].

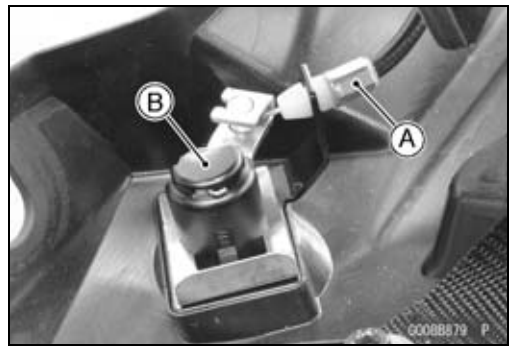

● Open the clamps [A].
● Cut the band of clamps [B].

NOTE

○*The clip of the clamp cannot reuse. Do not remove the clip if it is not necessary.*

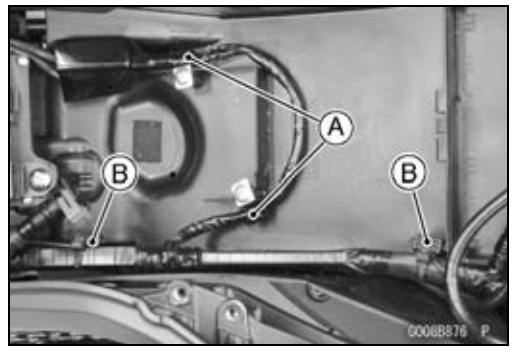

● Disconnect:
Oxygen Sensor Lead Connector [A]
Rear Brake Light Switch Lead Connector [B]
Rear Wheel Rotation Sensor Lead Connector [C]
Exhaust Butterfly Valve Actuator Lead Connectors [D]
● Pull the rear fender [E] rearward slightly.

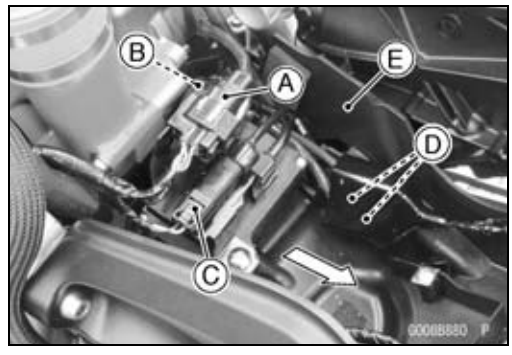

Fenders

- Remove:
  Exhaust Butterfly Valve Actuator Mounting Screw [A]
  Exhaust Butterfly Valve Actuator Mounting Bolt [B]
  Washers [C]
  Collar [D]
  Wellnut [E]
  Washer [F]
  Rear Fender [G]

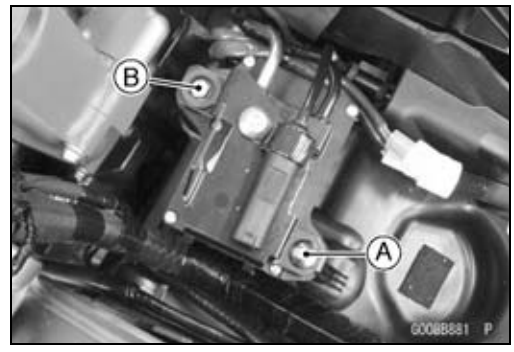

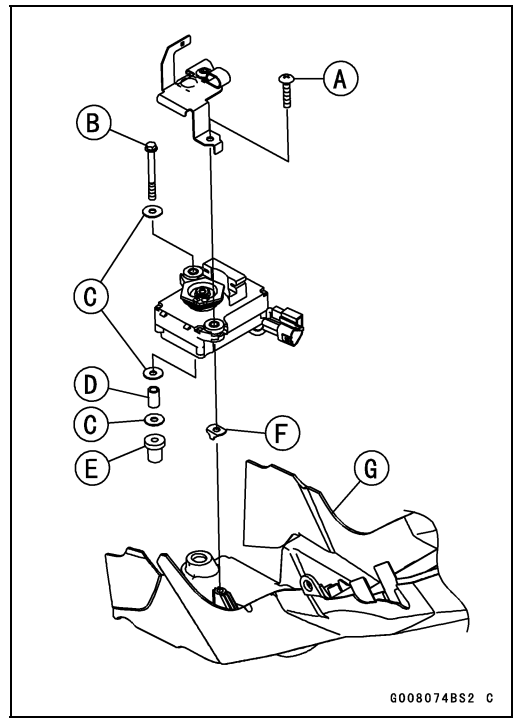

Fenders

Rear Fender Installation

- When installing the pads and dampers, position them as shown.
  Viewed from Inside [A]
  Viewed from Bottom [B]
  Damper [C]
  Damper [D]
  Dampers [E]
  Pad [F]
  Pad [G]

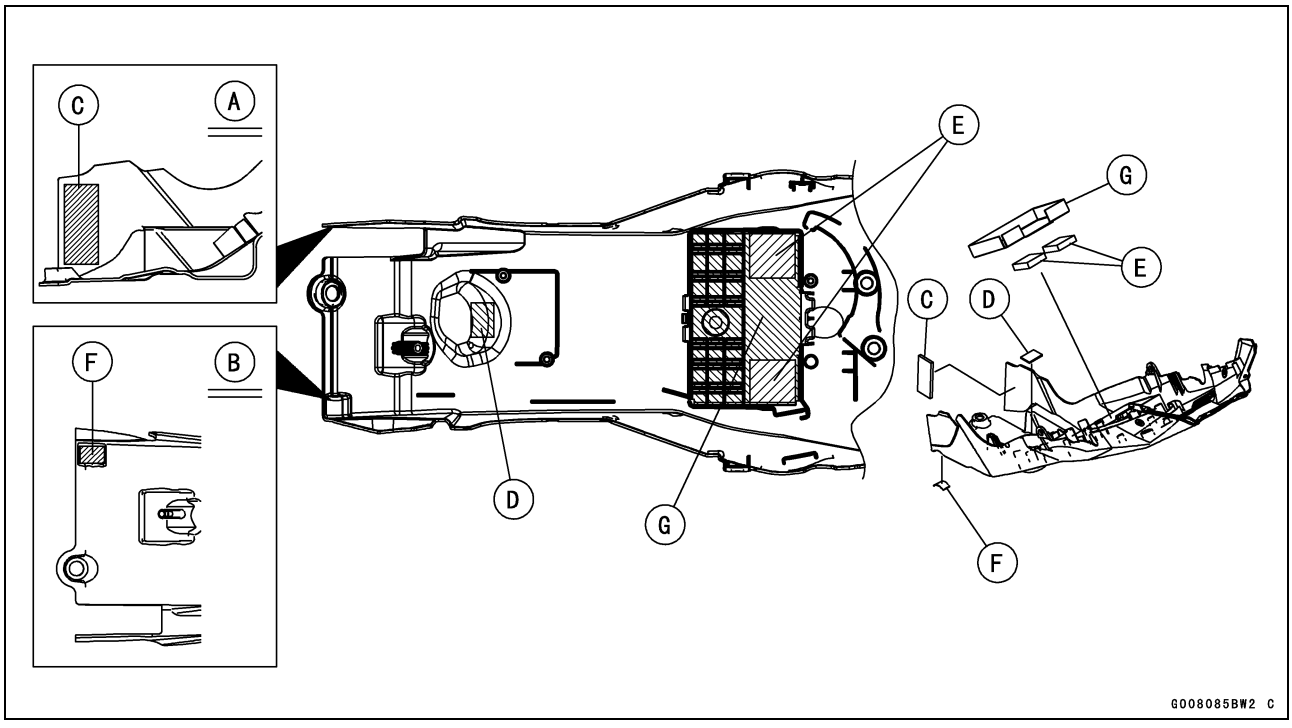

- Installation is the reverse of removal.
- Install the exhaust butterfly valve actuator (see Exhaust Butterfly Valve Actuator Installation in the Engine Top End chapter).
- Run the leads correctly (see Cable, Wire, and Hose Routing section in the Appendix chapter).

Frame

Frame Inspection

- Visually inspect the frame for cracks, dents, bending, or warp.

★If there is any damage to the frame, replace it.

⚠ WARNING

A repaired frame may fail in use, possibly causing an accident resulting in injury or death. If the frame is bent, dented, cracked, or warped, replace it.

Rear Frame Rear Removal

- Remove:
  Seat Pad (see Seat Pad Removal)
  Seat (see Seat Removal)
  Hip Support Covers (see Hip Support Cover Removal)
  Seat Cover (see Seat Cover Removal)
  Flap (see Flap Removal)
  Tail/Brake Light (see Tail/Brake Light Removal in the Electrical System chapter)
- Remove the bolts [A] to free the seat latch bracket [B].
- Remove the rear fender screws [C].

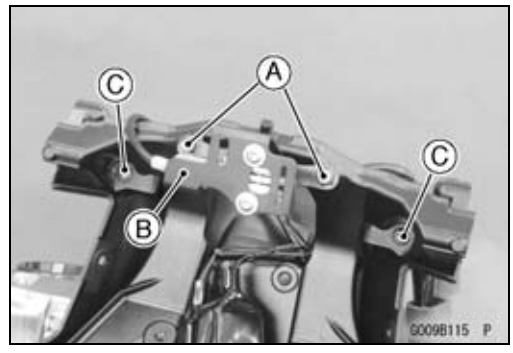

- While pushing down the rear fender [A] slightly, remove the rear frame rear bolts [B].
- Remove:
  Rear Frame Rear [C]

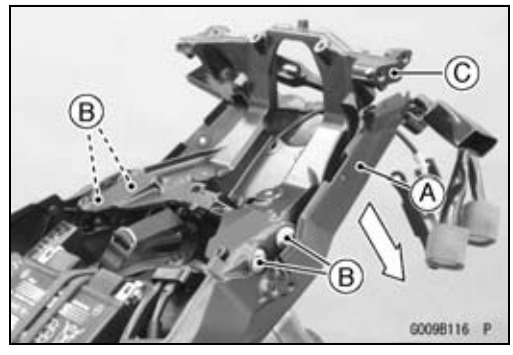

Rear Frame Rear Installation

- Installation is the reverse of removal.
- Apply a non-permanent locking agent to the rear frame rear bolts.
- Tighten:

Torque - Rear Frame Rear Bolts: 27 N·m (2.8 kgf·m, 20 ft·lb)

Frame

Rear Frame Front Removal

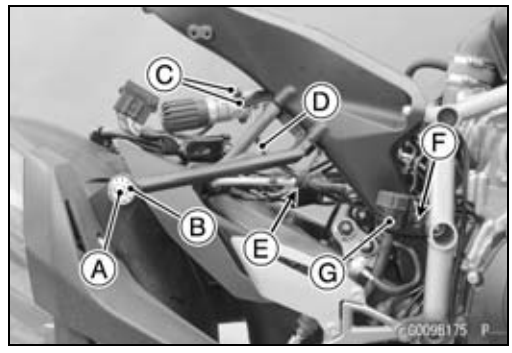

- Remove:
  Rear Fender (see Rear Fender Removal)
  Rear Frame Rear (see Rear Frame Rear Removal)
  Muffler Mounting Bolt [A], Collar [B] and Nut
  Spring Preload Adjuster Bolts [C], Nuts and Washers
- Free the adjuster cable [D] from the clamp [E].
- Remove the bolt [F] to free the rear brake fluid reservoir [G] from the rear frame front.

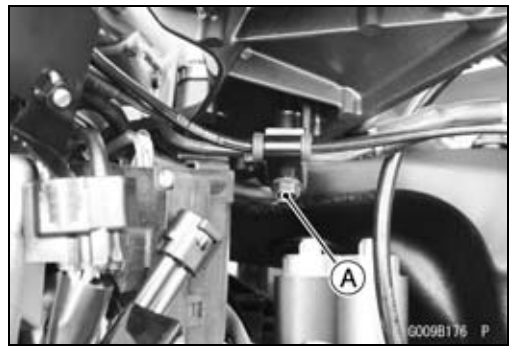

- Remove the rear brake pipe fitting bolt [A].

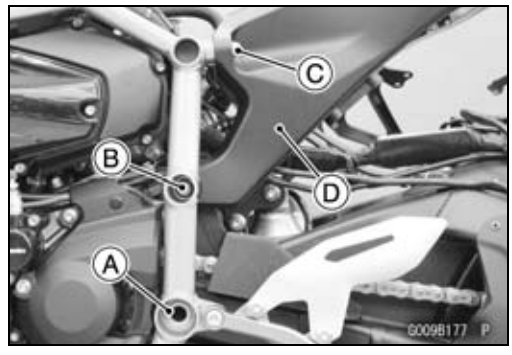

- Loosen the swingarm pivot shaft [A] and nut.
- Remove:
  Swingarm Mounting Plate Bolt [B] and Nut (Upper)
  Rear Frame Front Bolt [C]
  Rear Frame Front [D]

Rear Frame Front Installation

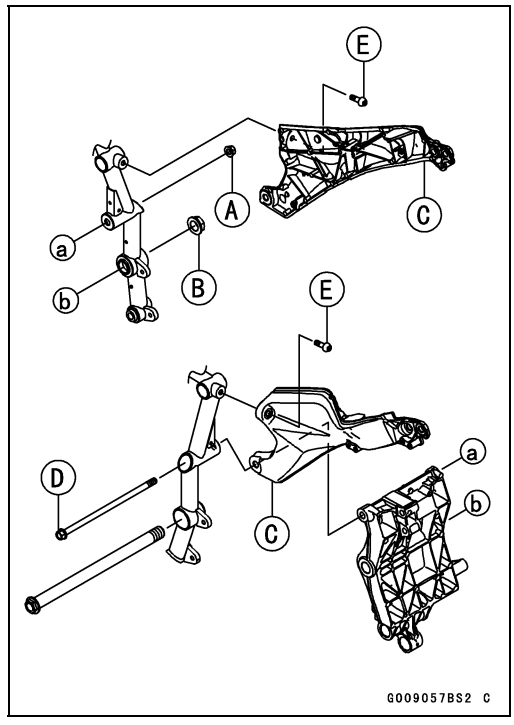

- Replace the rear engine mounting nut [A] and swingarm pivot nut [B] with new ones.
- Install:
  Rear Frame Front [C]
  Swingarm Mounting Plate Bolt (Upper) [D]
- Tighten:

Torque - Rear Frame Front Bolts [E]: 25 N·m (2.5 kgf·m, 18 ft·lb)
Swingarm Mounting Plate Nut (Upper): 44 N·m (4.5 kgf·m, 32 ft·lb)
Swingarm Pivot Shaft Nut: 108 N·m (11.0 kgf·m, 79.7 ft·lb)

- Install the removed parts (see appropriate chapters).

Windshield

Windshield Removal

- Remove the bolts [A] and Washers.
- Remove the windshield [B] upward.

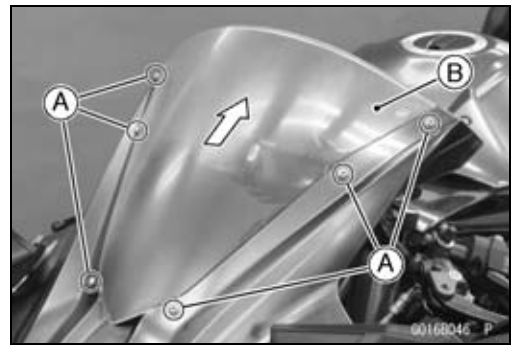

Windshield Installation

- Install the dampers [A].

○Be sure to install the flange [B] of the dampers fully as shown.

- Install the cover [C] and wellnuts [D] to the windshield [E].

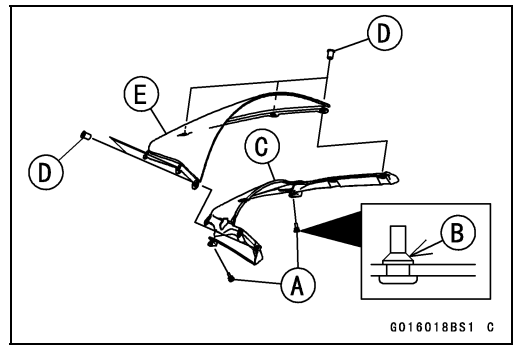

- Insert the tab [A] of the cover under the upper fairing.
- Install the washers and tighten the bolts.

Torque - Windshield Mounting Bolts: 0.43 N·m (0.044 kgf·m, 3.8 in·lb)



Guard

Mud Guard Removal

- Remove:
  Heel Guard (see Rear Master Cylinder Removal in the Brakes chapter)
  Bolts [A] and Washers

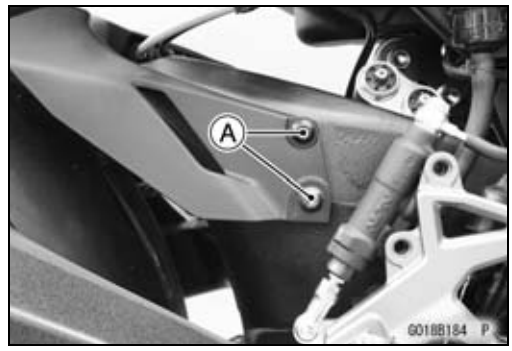

- Remove:
  Bolts [A] and Washers
  Mud Guard [B]

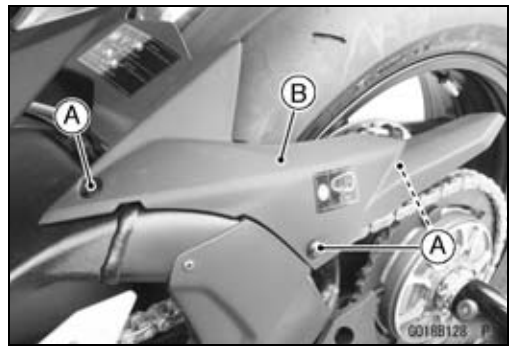

Mud Guard Installation

- Apply a non-permanent locking agent to the following bolts.
  Bolts, L = 14 mm (0.55 in.) [A]
  Bolt, L = 22 mm (0.87 in.) [B]
- Install the mud guard [C] and washers [D].
- Tighten the bolts.
- Install the heel guard (see Rear Master Cylinder Installation in the Brakes chapter).

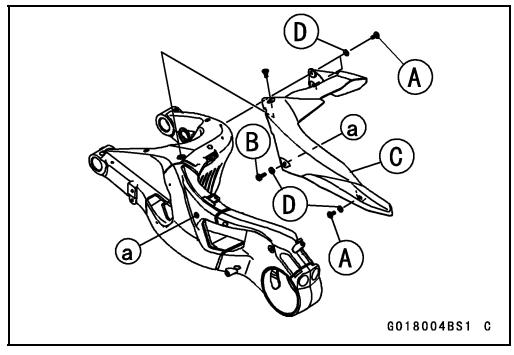

Side Stand

Side Stand Removal

- Raise the rear wheel off the ground with the stand.
- Remove the side stand switch bolt [A] to free the side stand switch [B].

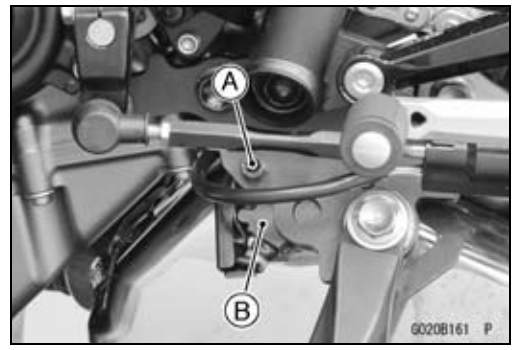

- Remove:
  Spring [A]
  Side Stand Bolt [B] and Nut
  Collar [C]
  Washer
  Shims
  Side Stand [D]

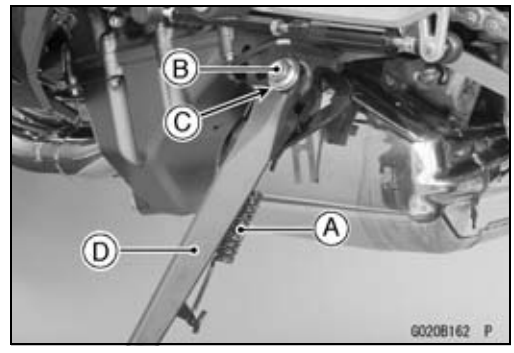

★If the side stand bracket removal is necessary, follow the below procedures.

- Loosen:
  Swingarm Mounting Plate Nut (Upper) (see Swingarm Removal in the Suspension chapter)
  Swingarm Pivot Shaft Nut (see Swingarm Removal in the Suspension chapter)
- Remove the shift lever bolt [A].
- Take the shift lever [B] off the shift shaft.

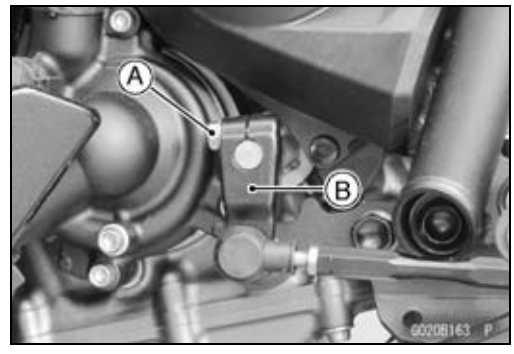

- Remove:
  Side Stand Bracket Bolts [A] and Washers [B]
  Side Stand Bracket Nut [C]
  Side Stand Bracket [D]

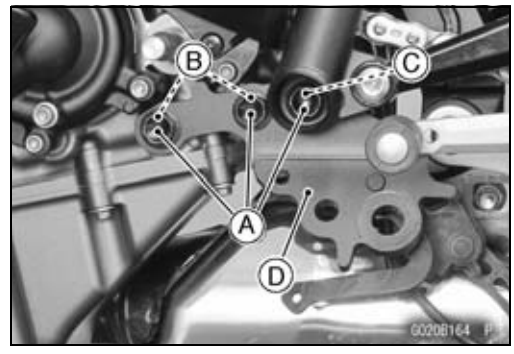

Side Stand

Side Stand Installation

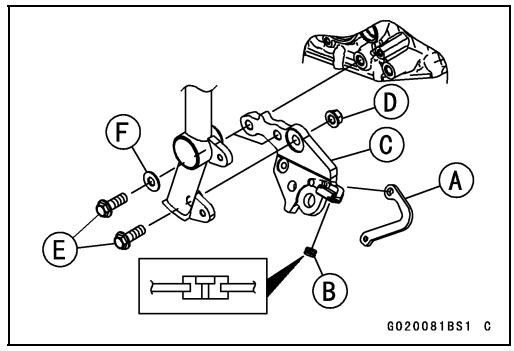

- When installing the side stand bracket, be sure to install the link arm [A] and grommet [B] to the side stand bracket [C].

○Face the small hole of the grommet to the bottom as shown.

- Replace the side stand bracket nut [D] with a new one.
- Apply a non-permanent locking agent to the side stand bracket bolts [E].
- Install the side stand bracket to the engine and frame.
- Install the washers [F].
- Tighten:

Torque - Side Stand Bracket Bolts: 49 N·m (5.0 kgf·m, 36 ft·lb)
Swingarm Pivot Shaft Nut: 108 N·m (11.0 kgf·m, 79.7 ft·lb)
Swingarm Mounting Plate Nut (Upper): 44 N·m (4.5 kgf·m, 32 ft·lb)

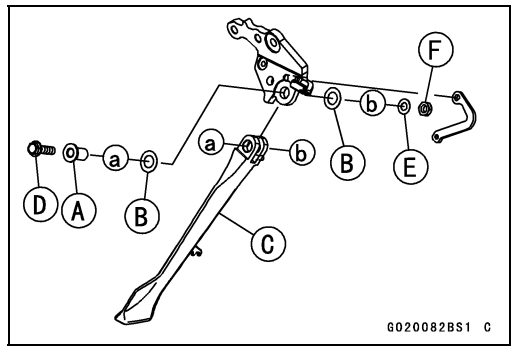

- Apply grease to the outside of the collar [A] and the both sides of the shims [B].
- Install:
  Shims
  Side Stand [C]
  Collar
  Side Stand Bolt [D]
  Washer [E]
- Replace the side stand nut [F] with a new one.
- Tighten:

Torque - Side Stand Nut: 36 N·m (3.7 kgf·m, 27 ft·lb)

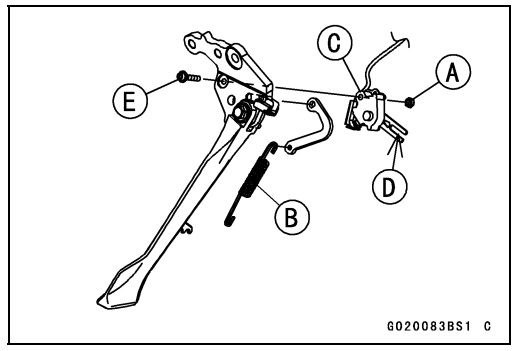

- Replace the side stand switch nut [A] with a new one.
- Install the spring [B].

○Face the spring ends as shown.

- Install the side stand switch [C].

○Insert the side stand switch arm [D] to the pin on the side stand.

- Run the side stand switch lead and quick shifter lead correctly (see Cable, Wire, and Hose Routing section in the Appendix chapter).
- Apply a non-permanent locking agent to the side stand switch bolt [E].
- Install the side stand switch bolt.
- Tighten:

Torque - Side Stand Switch Bolt: 8.8 N·m (0.90 kgf·m, 78 in·lb)

Rear View Mirrors

Rear View Mirror Removal

- Remove:
  Inner Covers (see Inner Cover Removal)
- Disconnect the front turn signal light lead connectors [A].
  Left Side [B]
  Right Side [C]

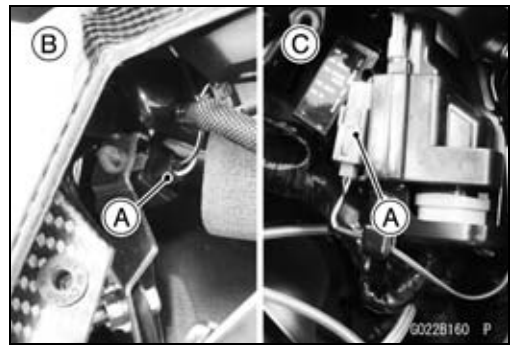

- Remove:
  Rear View Mirror Bolts [A]
  Rear View Mirror

○Turn the mirror stay [B] so that the bolts can be removed.

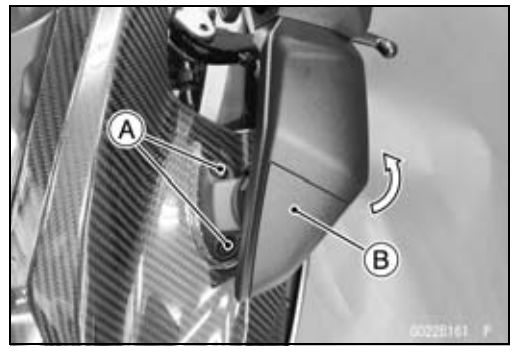

- When removing the upper cover [A], clear the claws [B] from the mirror stay and slide it to clear the tabs [C].

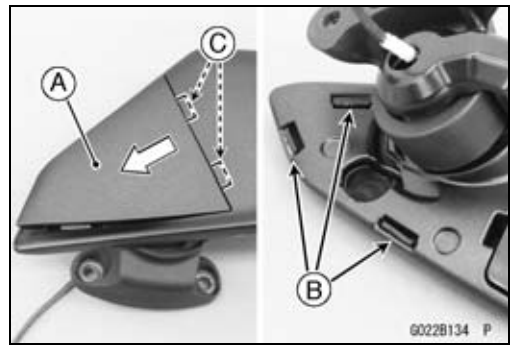

Rear View Mirror Installation

- When installing the pads [A], position them as shown.
  Rear View Mirror [B]
  Cover [C]

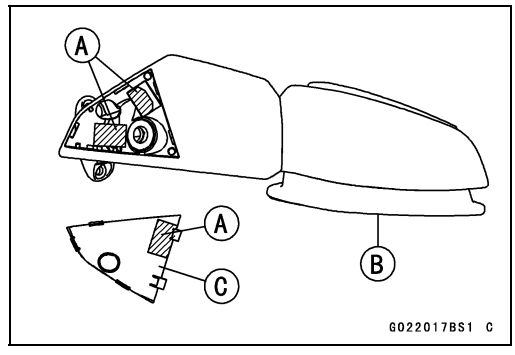

- Be sure to fit the holes [A] of the upper fairing to the bosses of the upper fairing bracket.
- Install the rear view mirror.
- Run the front turn signal light lead through the hole [B].
- Run the front turn signal light lead correctly (see Cable, Wire, and Hose Routing section in the Appendix chapter).
- Tighten:

  Torque - Rear View Mirror Mounting Bolts: 6.9 N·m (0.70 kgf·m, 61 in·lb)

- Install the removed parts (see appropriate chapters).

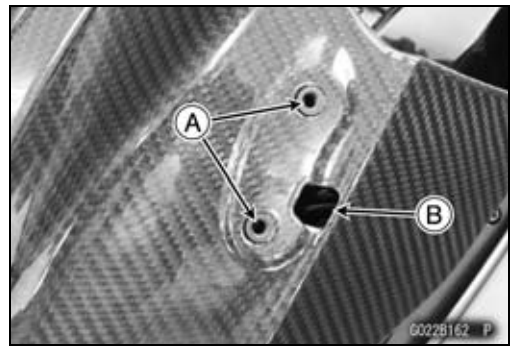

Electrical System

Table of Contents

Exploded View 16-4
Specifications 16-10
Special Tools and Sealant 16-11
Parts Location 16-12
Wiring Diagram (US, CAL and CA Models) 16-16
Wiring Diagram (Other than US, CAL and CA Models) 16-18
Precautions 16-20
Electrical Wiring 16-21
  Wiring Inspection 16-21
Battery 16-22
  Battery Removal 16-22
  Battery Installation 16-22
  Precautions 16-22
  Interchange 16-23
  Charging Condition Inspection 16-23
  Refreshing Charge 16-24
Charging System 16-25
  Alternator Cover Removal 16-25
  Alternator Cover Installation 16-25
  Stator Coil Removal 16-26
  Stator Coil Installation 16-26
  Alternator Rotor Removal 16-26
  Alternator Rotor Installation 16-27
  Charging Voltage Inspection 16-28
  Alternator Inspection 16-28
  Regulator/Rectifier Removal 16-30
  Regulator/Rectifier Installation 16-30
  Regulator/Rectifier Inspection 16-31
Ignition System 16-34
  Crankshaft Sensor Removal 16-34
  Crankshaft Sensor Installation 16-34
  Crankshaft Sensor Inspection 16-35
  Crankshaft Sensor Peak Voltage Inspection 16-35
  Camshaft Position Sensor Removal 16-36
  Camshaft Position Sensor Installation 16-36
  Camshaft Position Sensor Inspection 16-36
  Camshaft Position Sensor Peak Voltage Inspection 16-37
  Timing Rotor Removal 16-37
  Timing Rotor Installation 16-37
  Stick Coil Removal 16-38
  Stick Coil Installation 16-38
  Stick Coil Inspection 16-38
  Stick Coil Primary Peak Voltage Inspection 16-38
  Spark Plug Removal 16-39
  Spark Plug Installation 16-39
  Spark Plug Condition Inspection 16-39
  Interlock Operation Inspection 16-40
  IC Igniter Inspection 16-41
Electric Starter System 16-44
  Starter Motor Removal 16-44
  Starter Motor Installation 16-44
  Starter Motor Disassembly 16-45
  Starter Motor Assembly 16-45
  Brush Inspection 16-47
  Commutator Cleaning and Inspection 16-47
  Armature Inspection 16-48
  Brush Lead Inspection 16-48
  Left-hand End Cover Inspection 16-48
  Starter Relay Inspection 16-48
Lighting System 16-51
  Headlight Beam Horizontal Adjustment 16-51
  Headlight Beam Vertical Adjustment 16-51
  Headlight (LED) Assembly Removal/Installation 16-51
  Headlight (LED) Assembly Disassembly 16-51
  Headlight (LED) Assembly Assembly 16-51
  City Light (LED) Removal/Installation 16-51
  Tail/Brake Light (LED) Removal 16-52
  Tail/Brake Light (LED) Installation 16-52
  License Plate Light Bulb Replacement 16-53
  Turn Signal Light (LED) Replacement 16-54
Air Switching Valve 16-56
  Air Switching Valve Operation Test 16-56
  Air Switching Valve Unit Test 16-56
Radiator Fan System 16-58
  Fan Motor Inspection 16-58
Meter, Gauge, Indicator Unit 16-60
  Meter Unit Removal 16-60
  Meter Unit Installation 16-60
  Meter Operation Inspection 16-61
  Meter Operation Inspection 16-63
  Meter Unit Inspection 16-64

Immobilizer System (Equipped Models) 16-70
Operational Cautions 16-70
Key Registration 16-70
Immobilizer System Parts Replacement 16-88
Immobilizer System Inspection 16-90
Switches and Sensors 16-92
Brake Light Timing Inspection 16-92
Brake Light Timing Adjustment 16-92
Switch Inspection 16-92
Water Temperature Sensor Inspection 16-93
Oxygen Sensor Removal 16-93
Oxygen Sensor Installation 16-94
Oxygen Sensor Inspection 16-94
Fuel Reserve Switch Inspection 16-94
Gear Position Sensor Removal 16-95
Gear Position Sensor Installation 16-95
Gear Position Sensor Inspection 16-95
Relay Box 16-96
Relay Box Removal 16-96
Relay Circuit Inspection 16-96
Diode Circuit Inspection 16-97
Fuse 16-99
30 A Main/15 A ECU Fuse Removal 16-99
Fuse Box Fuse Removal 16-99
Fuse Installation 16-100
Fuse Inspection 16-100

This page intentionally left blank.

Exploded View

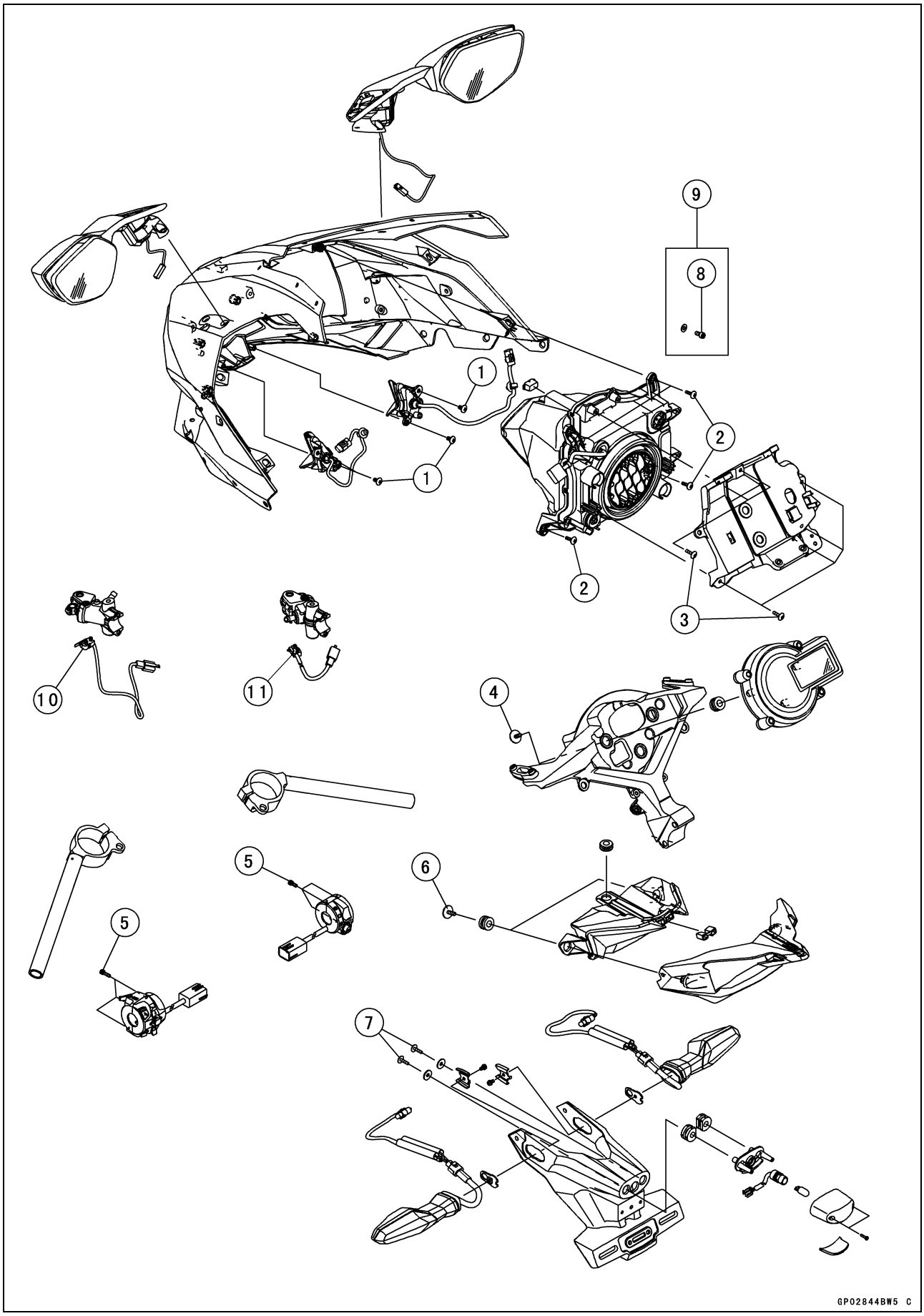

Exploded View

No.	Fastener	Torque			Remarks
		N·m	kgf·m	ft·lb	
1	City Light Mounting Screws	1.2	0.12	11 in·lb	
2	Headlight Unit Mounting Screws	1.2	0.12	11 in·lb	
3	Headlight Cover Screws	1.2	0.12	11 in·lb	
4	Meter Unit Mounting Screws	1.5	0.15	13 in·lb	
5	Switch Housing Bolts	0.90	0.09	8 in·lb	
6	Tail/Brake Light Mounting Screws	1.2	0.12	11 in·lb	
7	Licence Plate Light Mounting Screws	1.2	0.12	11 in·lb	
8	Headlight Unit Mounting Bolts	3.0	0.31	27 in·lb	

9. Special Edition
10. Starter Lockout Switch
11. Front Brake Light Switch

Exploded View

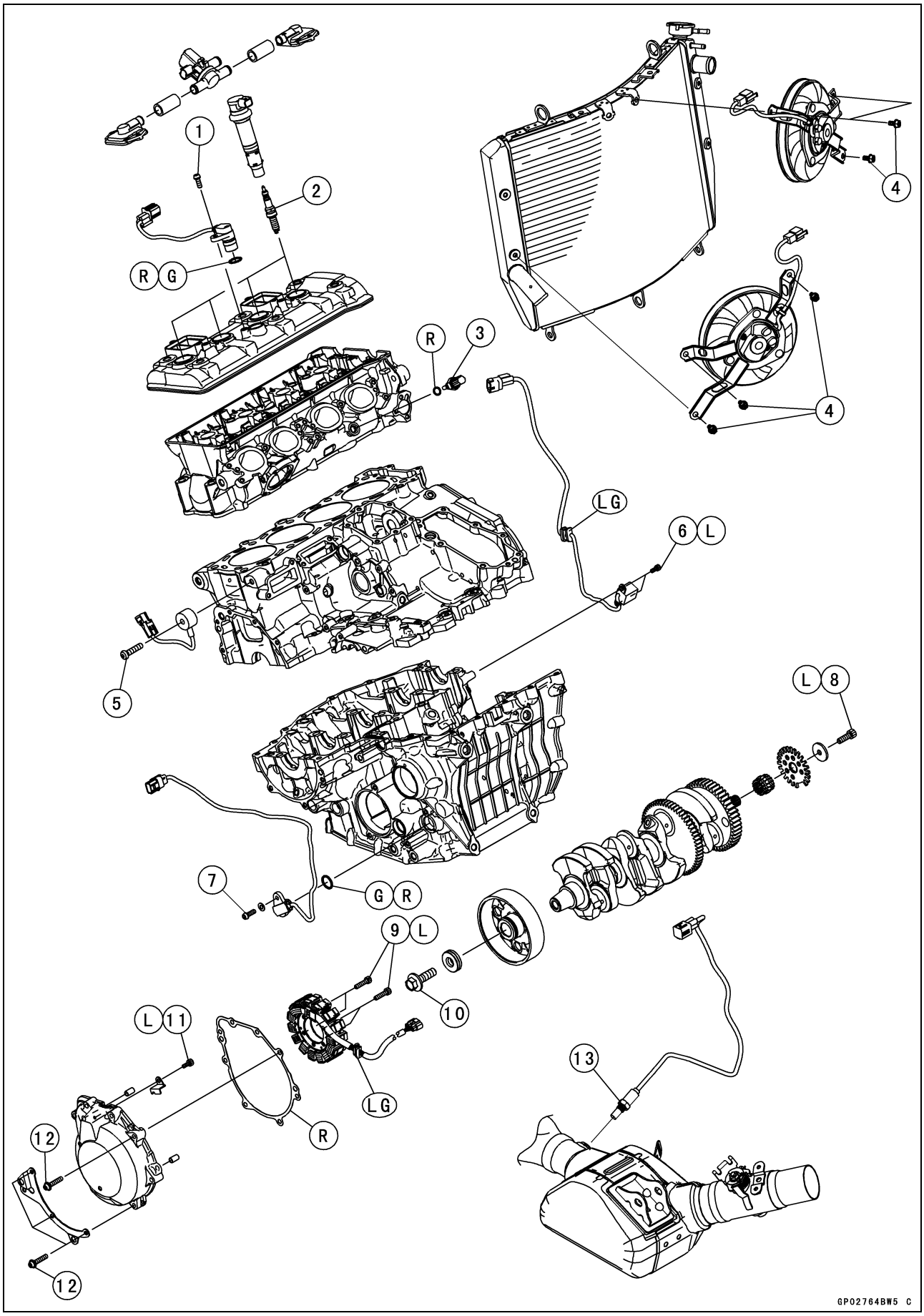

Exploded View

No.	Fastener	Torque			Remarks
		N·m	kgf·m	ft·lb	
1	Camshaft Position Sensor Bolt	10	1.0	89 in·lb	
2	Spark Plugs	13	1.3	115 in·lb	
3	Water Temperature Sensor	12	1.2	106 in·lb	
4	Radiator Fan Bolts	8.4	0.86	74 in·lb	
5	Knock Sensor Bolt	25	2.5	18	
6	Crankshaft Sensor Bolts	6.0	0.61	53 in·lb	L
7	Gear Position Sensor Bolt	10	1.0	89 in·lb	
8	Timing Rotor Bolt	39	4.0	29	L
9	Stator Coil Bolts	12	1.2	106 in·lb	L
10	Alternator Rotor Bolt	155	15.8	114	
11	Alternator Lead Holding Plate Bolt	10	1.0	89 in·lb	L
12	Alternator Cover Bolts	10	1.0	89 in·lb	
13	Oxygen Sensor	25	2.5	18	

G: Apply grease.
L: Apply a non-permanent locking agent.
LG: Apply liquid gasket.
R: Replacement Parts

Exploded View

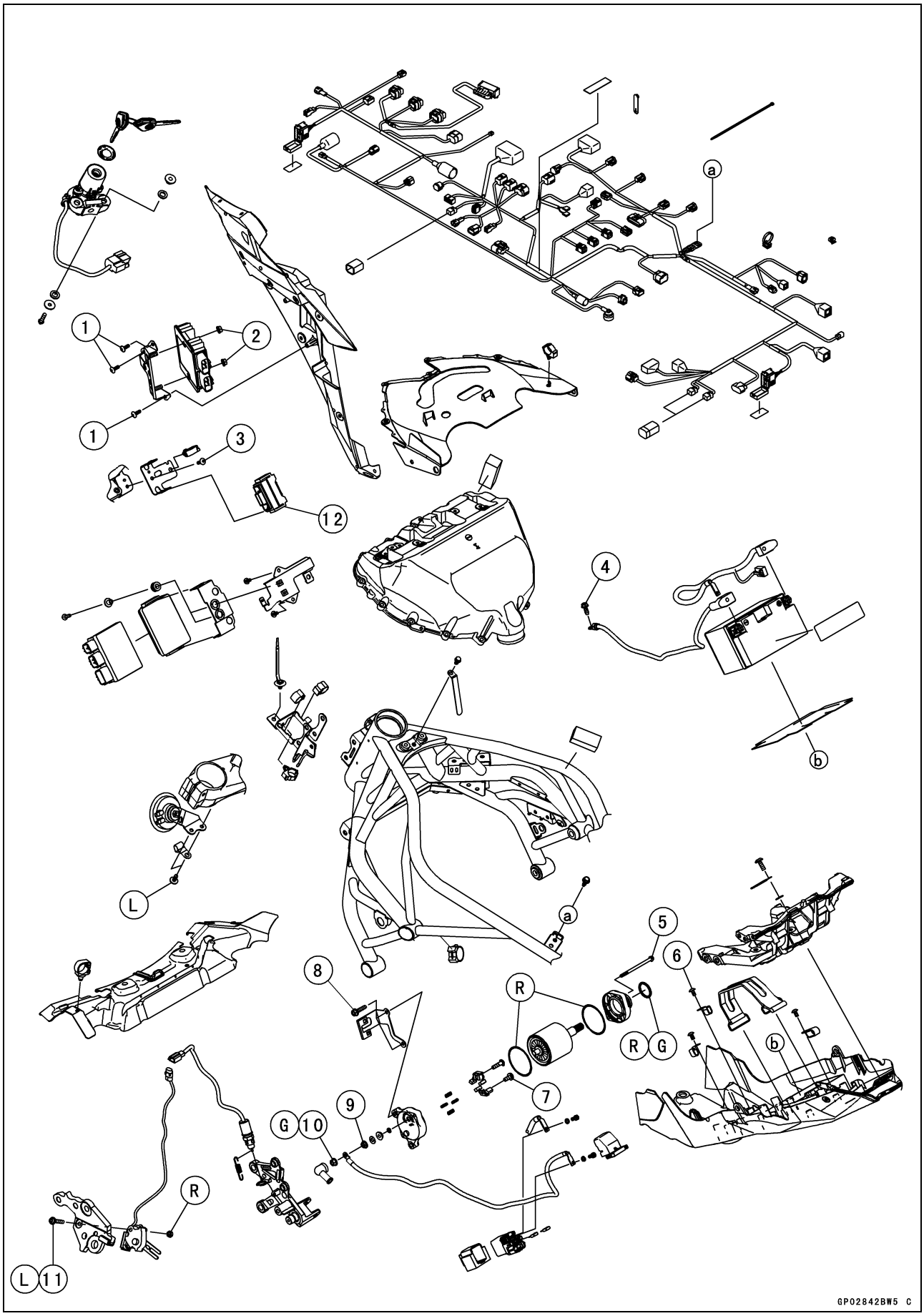

Exploded View

No.	Fastener	Torque			Remarks
		N·m	kgf·m	ft·lb	
1	Regulator/Rectifier Bracket Screws	1.2	0.12	11 in·lb	
2	Regulator/Rectifier Mounting Nuts	6.0	0.61	53 in·lb	
3	Immobilizer Amplifier Bracket Screw	1.2	0.12	11 in·lb	
4	Engine Ground Terminal Bolt	10	1.0	89 in·lb	
5	Starter Motor Through Bolts	5.0	0.51	44 in·lb	
6	Clamp Screws	1.2	0.12	11 in·lb	
7	Brush Holder Screw	3.8	0.39	34 in·lb	
8	Starter Motor Mounting Bolts	10	1.0	89 in·lb	
9	Starter Motor Terminal Locknut	11	1.1	97 in·lb	
10	Starter Motor Cable Terminal Nut	6.0	0.61	53 in·lb	G
11	Side Stand Switch Bolt	8.8	0.90	78 in·lb	L

12. Immobilizer System Equipped Models
G: Apply grease.
L: Apply a non-permanent locking agent.
R: Replacement Parts

Specifications

Item	Standard
Battery	
Type	Sealed Battery
Model Name	YTZ10S
Capacity	12 V 8.6 Ah (10 HR)
Voltage	12.8 V or more
Gross Weight	3.2 kg (7.1 lb)
Electrolyte Volume	0.45 L (27 cu in.)
Charging System	
Type	Three-phase AC
Alternator Output Voltage	AC 47.2 ~ 70.8 V @4 000 r/min (rpm)
Stator Coil Resistance	0.114 ~ 0.170 Ω @20°C (68°F)
Charging Voltage (Regulator/Rectifier Output Voltage)	14.6 ~ 15.0 V @25°C (77°F)
Ignition System	
Crankshaft Sensor:	
Resistance	376 ~ 564 Ω @20°C (68°F)
Peak Voltage	3 V or more
Camshaft Position Sensor:	
Resistance	400 ~ 460 Ω @20°C (68°F)
Peak Voltage	0.6 V or more
Stick Coil:	
Primary Winding Resistance	1.19 ~ 1.61 Ω @20°C (68°F)
Secondary Winding Resistance	10.2 ~ 13.8 kΩ @20°C (68°F)
Primary Peak Voltage	100 V or more
Spark Plug:	
Type	NGK SILMAR9B9
Gap	0.8 ~ 0.9 mm (0.031 ~ 0.035 in.)
Electric Starter System	
Starter Motor:	
Brush Length	12.0 mm (0.47 in.) (Service Limit: 6.5 mm (0.26 in.))
Air Switching Valve	
Resistance	20 ~ 24 Ω @20°C (68°F)
Meter Unit	
CAN Communication Line Resistance	123 ~ 125 Ω at meter connector
Switches and Sensors	
Rear Brake Light Switch Timing	ON after about 10 mm (0.39 in.) of pedal travel
Oil Pressure Switch Connections	When engine is stopped: ON When engine is running: OFF
Water Temperature Sensor Resistance	in the text

Special Tools and Sealant

Peak Voltage Adapter:
57001-1415

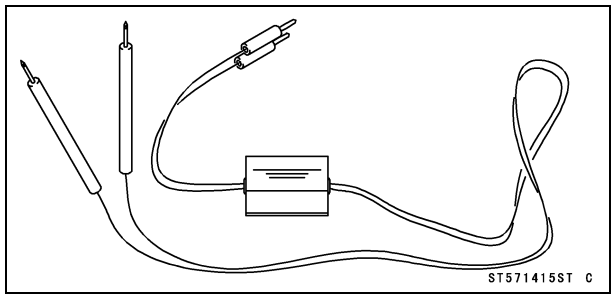

Flywheel Puller Assembly, M38 × 1.5/M35 × 1.5:
57001-1615

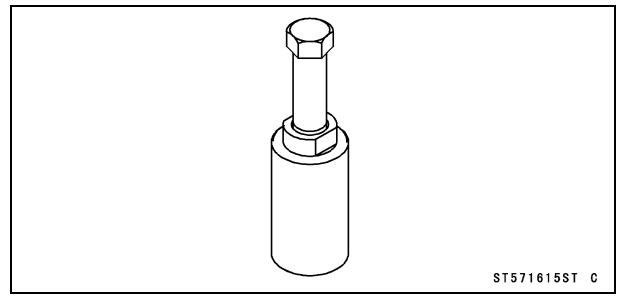

Lead Wire - Peak Voltage Adapter:
57001-1449

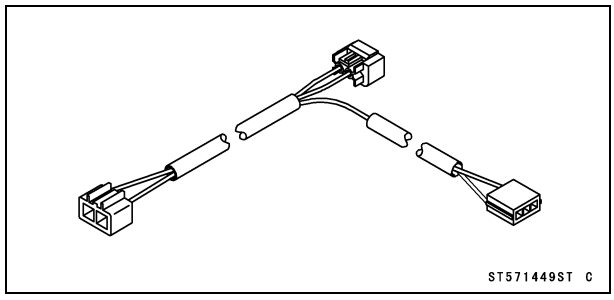

Rotor Holder:
57001-1666

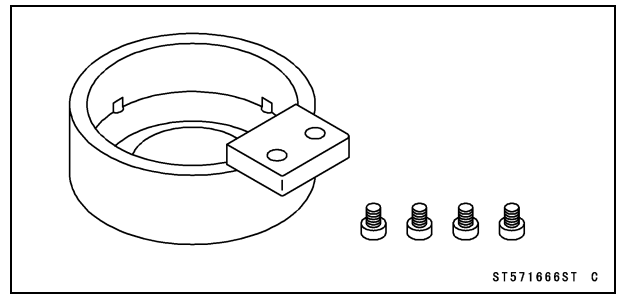

Key Registration Unit:
57001-1582

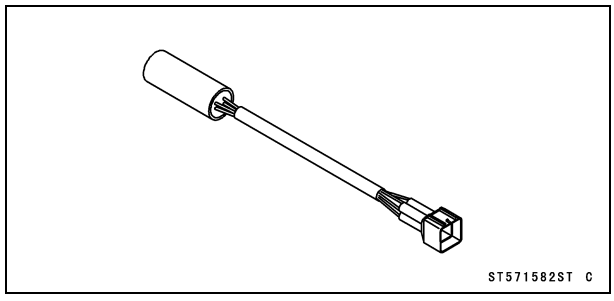

Key Registration Adapter:
57001-1746

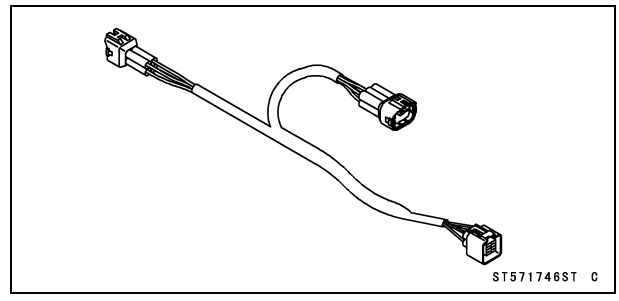

Grip:
57001-1591

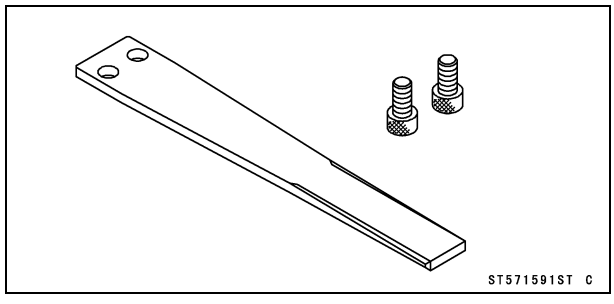

Stopper:
57001-1829

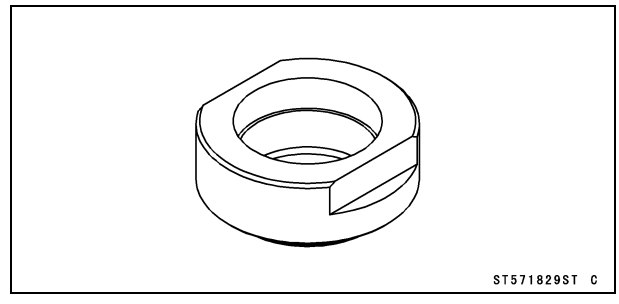

Flywheel & Pulley Holder:
57001-1605

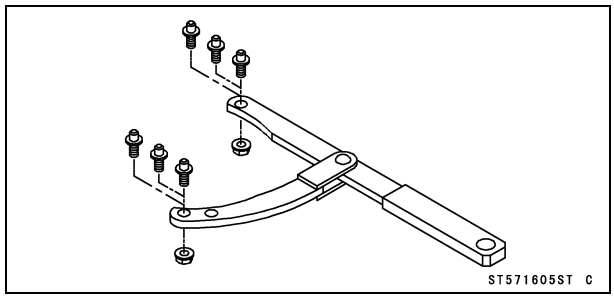

Liquid Gasket, TB1211F:
92104-0004

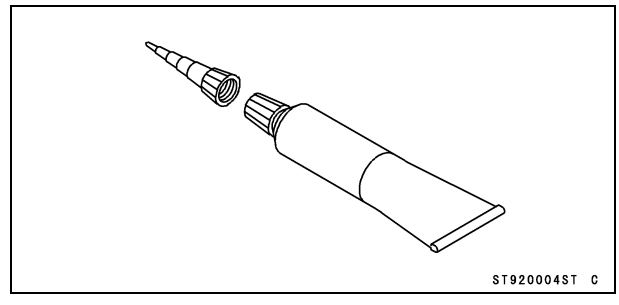

Parts Location

Meter Unit [A]
Ignition Switch [B] (Immobilizer Equipped Models: Including Immobilizer Antenna)
Starter Lockout Switch [C]
Front Brake Light Switch [D]

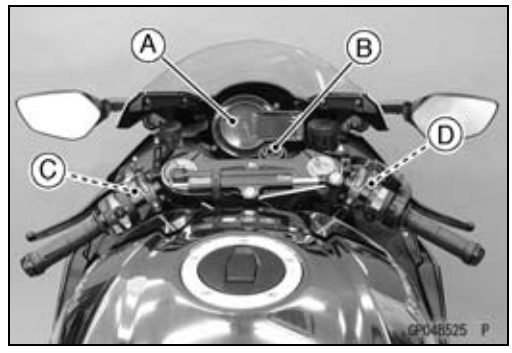

Air Switching Valve [A]
Stick Coils [B]
Spark Plugs [C]
Camshaft Position Sensor [D]

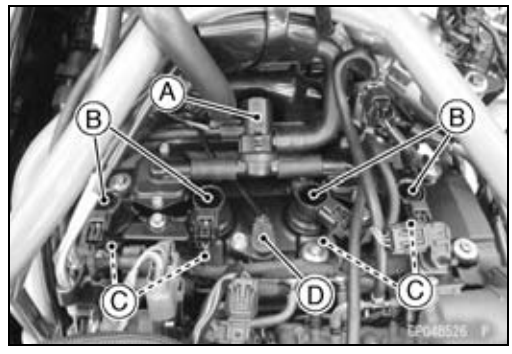

Radiator Fan Motor [A] (Both Sides)
Regulator/Rectifier [B]

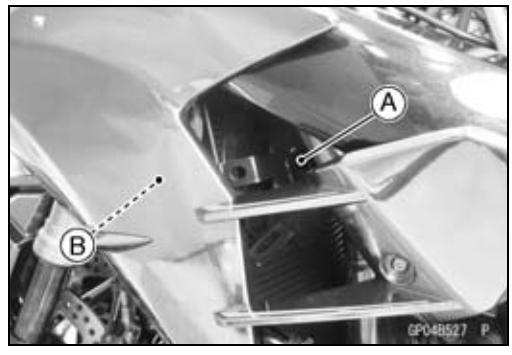

Alternator [A]
Oil Pressure Switch [B]

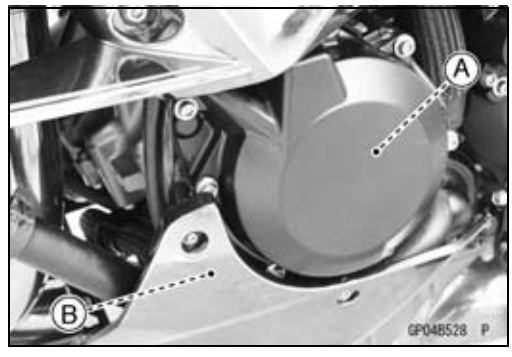

Fuse Box (1) [A]
Immobilizer Amplifier [B] (Immobilizer Equipped Models)

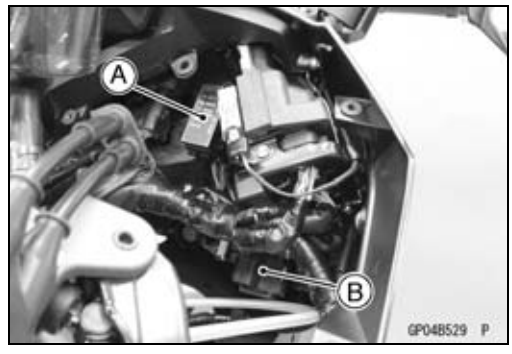

Parts Location

Relay Box [A]

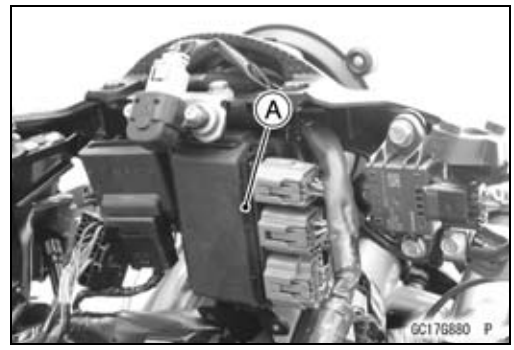

Fuse Box (2) [A]
Battery 12 V 8.6 Ah [B]
Starter Relay [C]

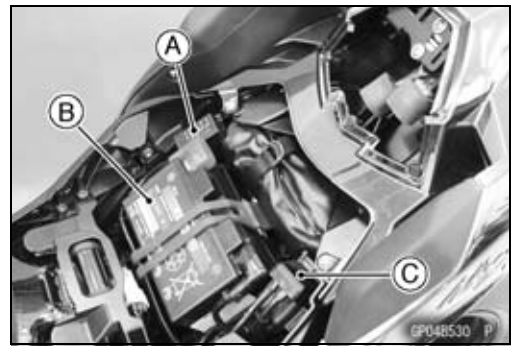

Crankshaft Sensor [A]
Oxygen Sensor [B]

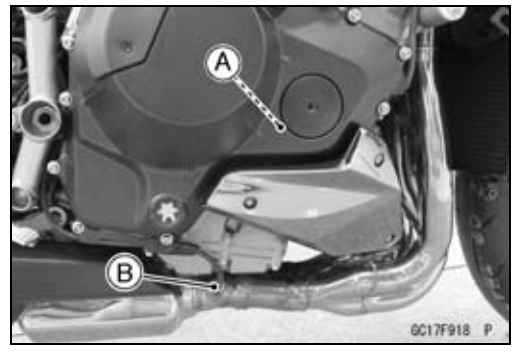

Water Temperature Sensor [A]



Gear Position Sensor [A]
Side Stand Switch [B]

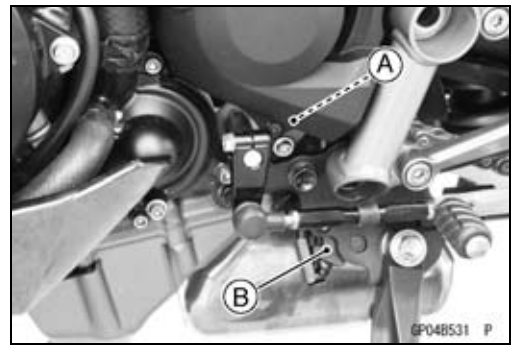

Parts Location

Rear Brake Light Switch [A]



Horn [A]

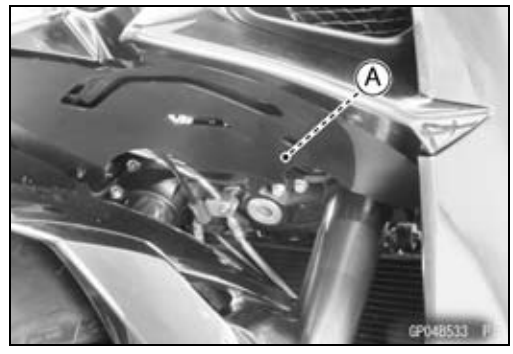

Parts Location

This page intentionally left blank.

Wiring Diagram (US, CAL and CA Models)

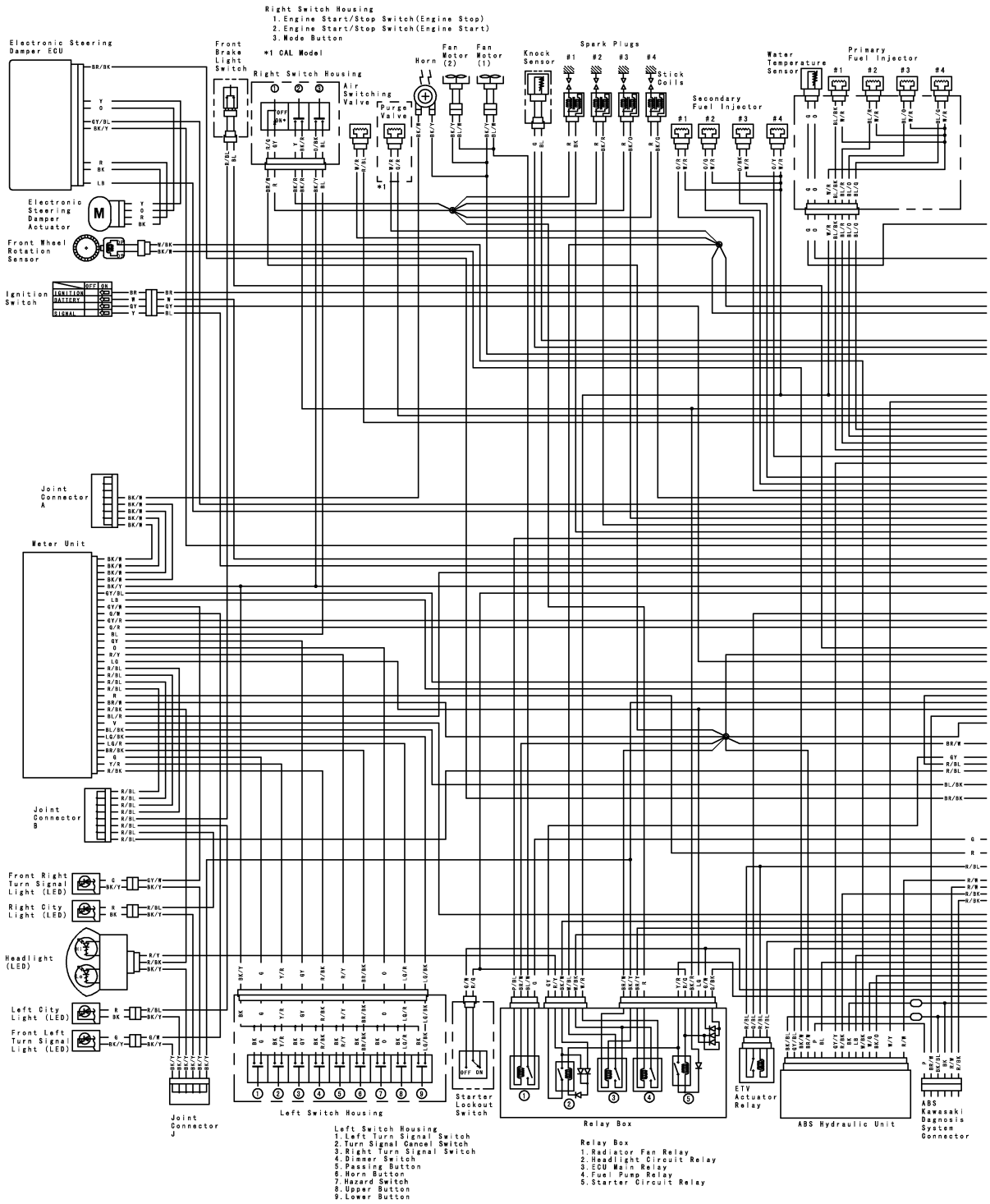

LEFT SWITCH HOUSING CONNECTIONS																		
	Left Turn Signal Switch		Turn Signal Cancel Switch		Right Turn Signal Switch		Dimmer Switch		Passing Button		Horn Button		Hazard Switch		Upper Button		Lower Button	
Color	BK	G	BK	Y/R	BK	GY	BK	R/BK	BK	R/Y	BK	BR/BK	BK	O	BK	LG/R	BK	LG/BK
ON	●	●	●	●	●	●	●	●	●	●	●	●	●	●	●	●	●	●
OFF																		

W2L1288CW5 C

Wiring Diagram (US, CAL and CA Models)

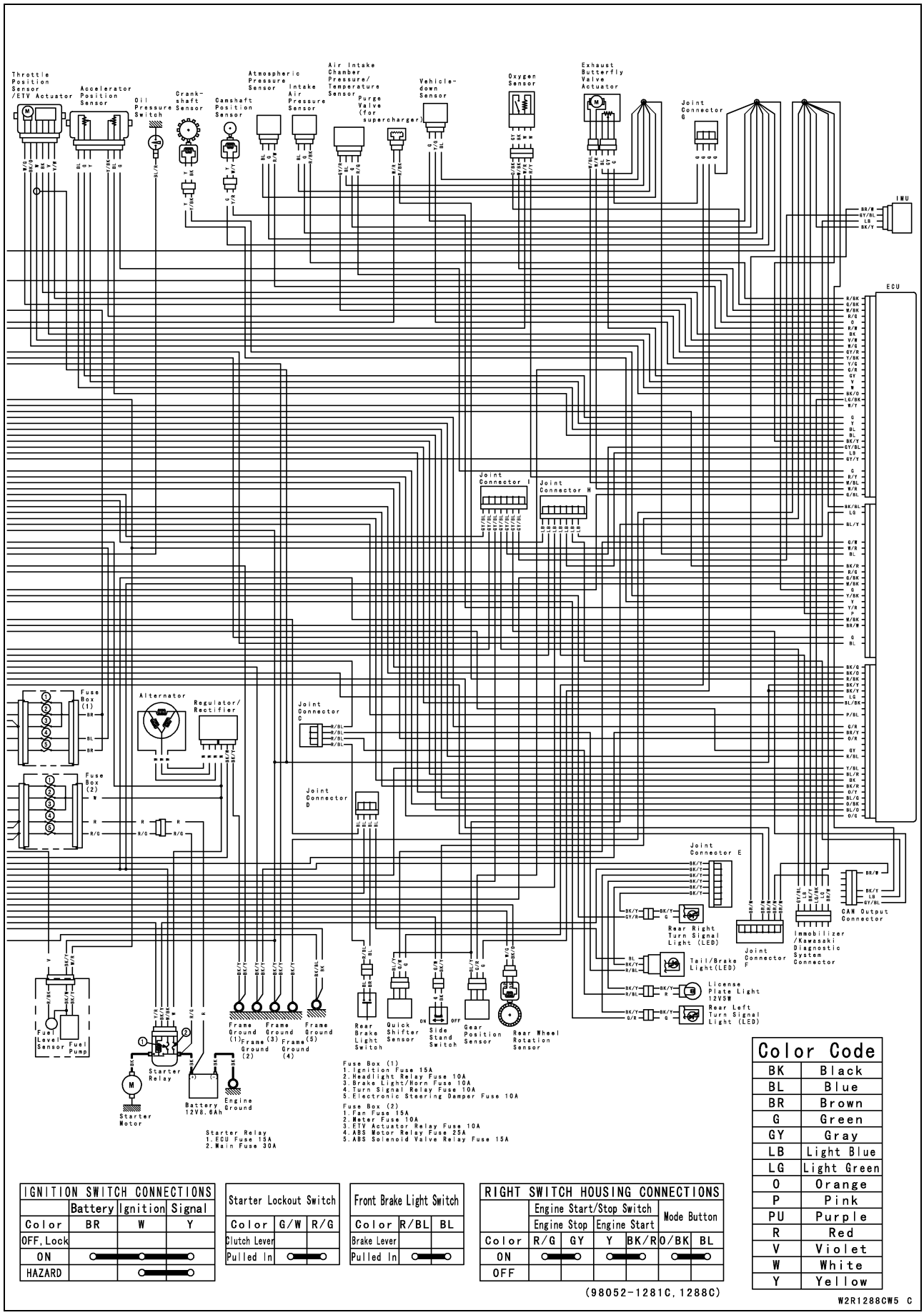

IGNITION SWITCH CONNECTIONS			
	Battery	Ignition	Signal
Color	BR	W	Y
OFF, Lock			
ON	●	●	●
HAZARD		●	●

Starter Lockout Switch		
Color	G/W	R/G
Clutch Lever		
Pulled In	●	●

Front Brake Light Switch		
Color	R/BL	BL
Brake Lever		
Pulled In	●	●

RIGHT SWITCH HOUSING CONNECTIONS					
	Engine Start/Stop Switch			Mode Button	
	Engine Stop		Engine Start		
Color	R/G	GY	Y	BK/R	O/BK	BL
ON	●	●	●	●	●	●
OFF						

Color Code	
BK	Black
BL	Blue
BR	Brown
G	Green
GY	Gray
LB	Light Blue
LG	Light Green
O	Orange
P	Pink
PU	Purple
R	Red
V	Violet
W	White
Y	Yellow

(98052-1281C, 1288C)

W2R1288CW5 C

Wiring Diagram (Other than US, CAL and CA Models)

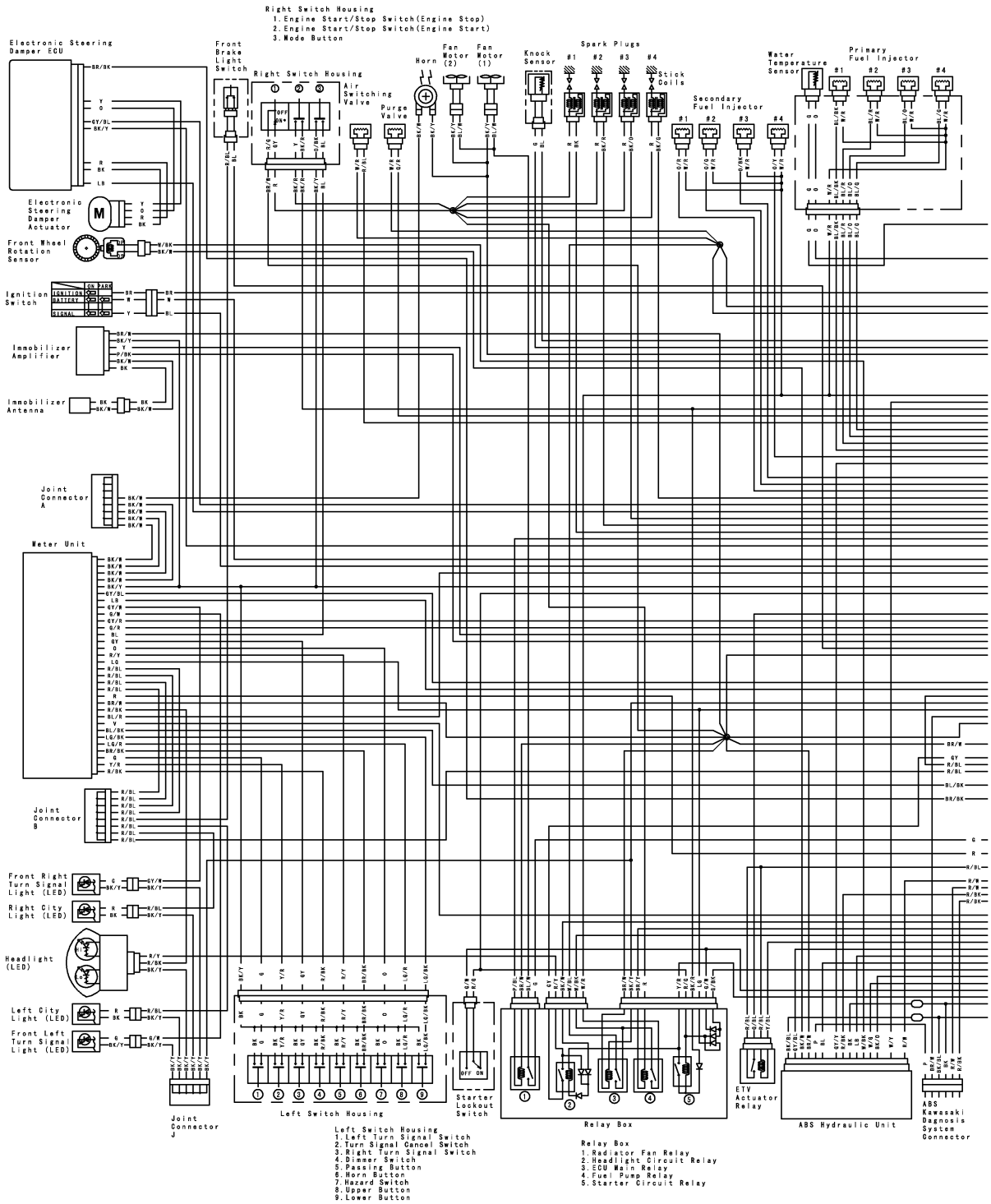

LEFT SWITCH HOUSING CONNECTIONS																		
	Left Turn Signal Switch		Turn Signal Cancel Switch		Right Turn Signal Switch		Dimmer Switch		Passing Button		Horn Button		Hazard Switch		Upper Button		Lower Button	
Color	BK	G	BK	Y/R	BK	GY	BK	R/BK	BK	R/Y	BK	BR/BK	BK	O	BK	LG/R	BK	LG/BK
ON	●	●	●	●	●	●	●	●	●	●	●	●	●	●	●	●	●	●
OFF																		

W2L1287CW5 C

Wiring Diagram (Other than US, CAL and CA Models)

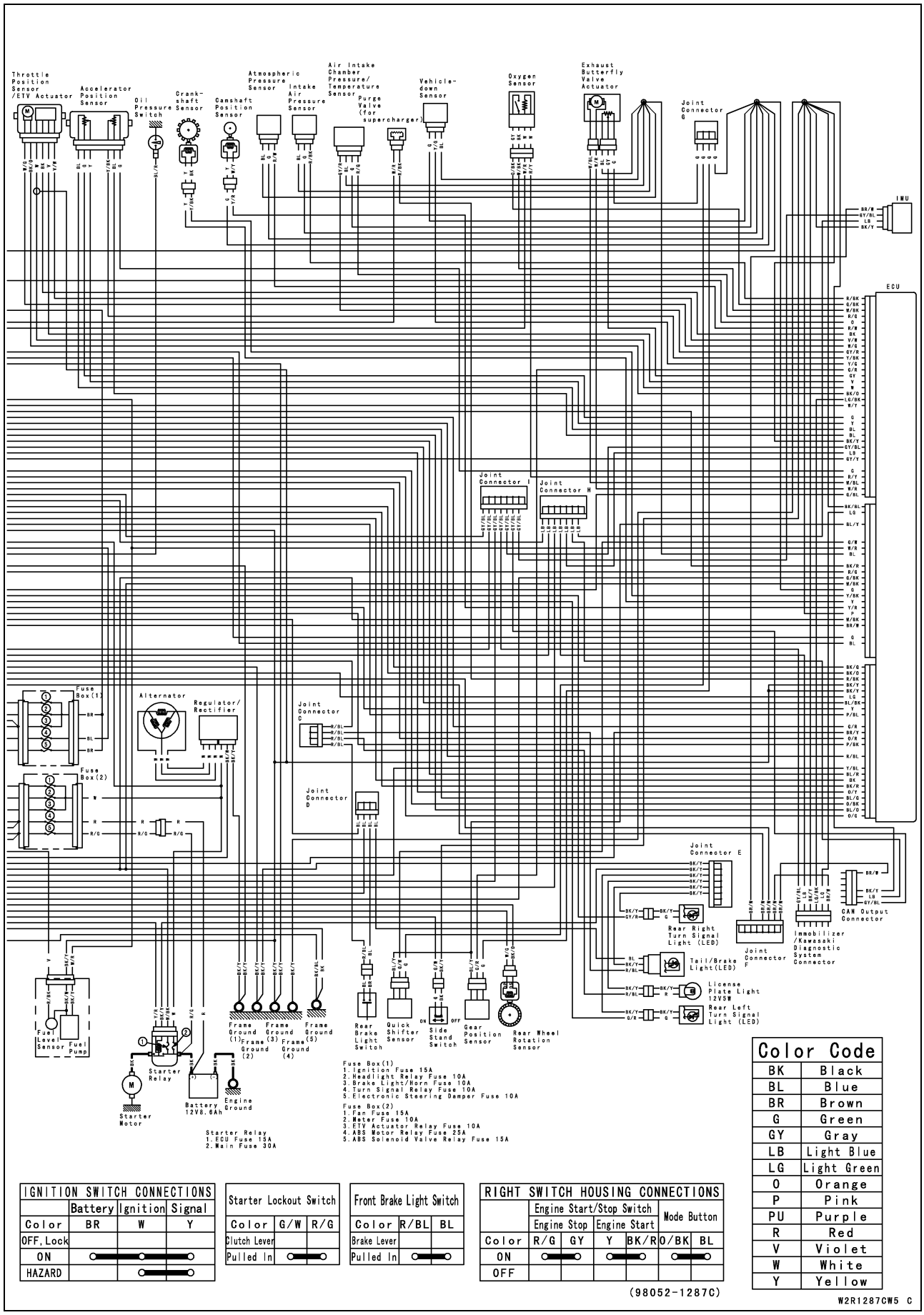

IGNITION SWITCH CONNECTIONS			
	Battery	Ignition	Signal
Color	BR	W	Y
OFF, Lock			
ON	●	●	●
HAZARD		●	●

Starter Lockout Switch		
Color	G/W	R/G
Clutch Lever		
Pulled In	●	●

Front Brake Light Switch		
Color	R/BL	BL
Brake Lever		
Pulled In	●	●

RIGHT SWITCH HOUSING CONNECTIONS					
	Engine Start/Stop Switch			Mode Button	
	Engine Stop		Engine Start		
Color	R/G	GY	Y	BK/R	O/BK	BL
ON	●	●	●	●	●	●
OFF						

Color Code	
BK	Black
BL	Blue
BR	Brown
G	Green
GY	Gray
LB	Light Blue
LG	Light Green
O	Orange
P	Pink
PU	Purple
R	Red
V	Violet
W	White
Y	Yellow

(98052-1287C)

W2R1287CW5 C

Precautions

There are a number of important precautions that are musts when servicing electrical systems. Learn and observe all the rules below.

- Do not reverse the battery cable connections. This will burn out the diodes on the electrical parts.
- Always check battery condition before condemning other parts of an electrical system. A fully charged battery is a must for conducting accurate electrical system tests.
- The electrical parts should never be struck sharply, as with a hammer, or allowed to fall on a hard surface. Such a shock to the parts can damage them.
- To prevent damage to electrical parts, do not disconnect the battery cables or any other electrical connections when the ignition switch is on, or while the engine is running.
- Because of the large amount of current, never keep the engine start/stop switch slided when the starter motor will not turn over, or the current may burn out the starter motor windings.
- Take care not to short the cables that are directly connected to the battery positive (+) terminal to the chassis ground.
- Troubles may involve one or in some cases all items. Never replace a defective part without determining what CAUSED the failure. If the failure was caused by some other item or items, they must be repaired or replaced, or the new replacement will soon fail again.
- Make sure all connectors in the circuit are clean and tight, and examine wires for signs of burning, fraying, etc. Poor wires and bad connections will affect electrical system operation.
- Measure coil and winding resistance when the part is cold (at room temperature).

Electrical Wiring

Wiring Inspection

- Visually inspect the wiring for signs of burning, fraying, etc.

★If any wiring is poor, replace the damaged wiring.

- Pull each connector [A] apart and inspect it for corrosion, dirt, and damage.

★If the connector is corroded or dirty, clean it carefully. If it is damaged, replace it.

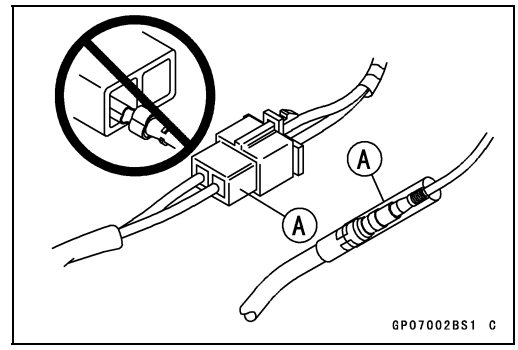

- Check the wiring for continuity.

○Use the wiring diagram to find the ends of the lead which is suspected of being a problem.

○Connect a tester between the ends of the leads.

★If the tester does not read about 0 Ω, the lead is defective. Replace the lead or the wiring harness [A] if necessary.

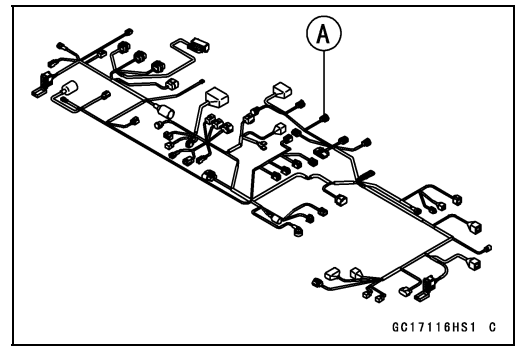

Battery

Battery Removal

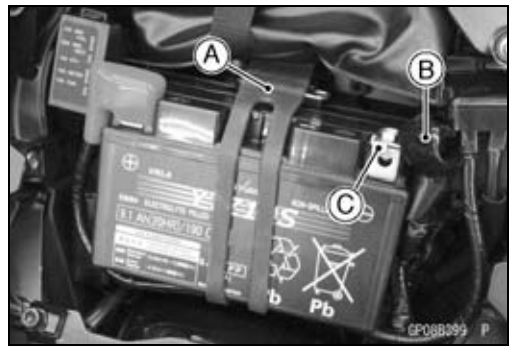

- Turn the ignition switch off.
- Remove:
  Seat (see Seat Removal in the Frame chapter)
- Remove the upper side of the band [A] from the hook.
- Slide out the black cap [B].
- Disconnect the negative (–) cable [C].

NOTICE
Be sure to disconnect the negative (–) cable first.

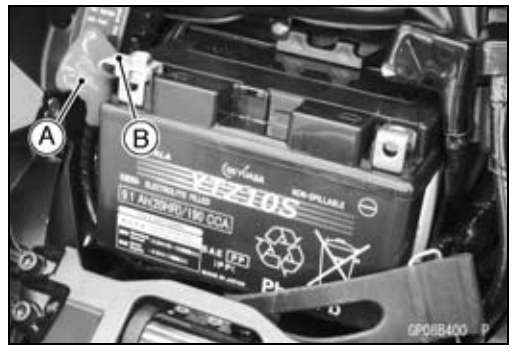

- Slide out the red cap [A] and disconnect the positive (+) cable [B].
- Remove the battery.

Battery Installation

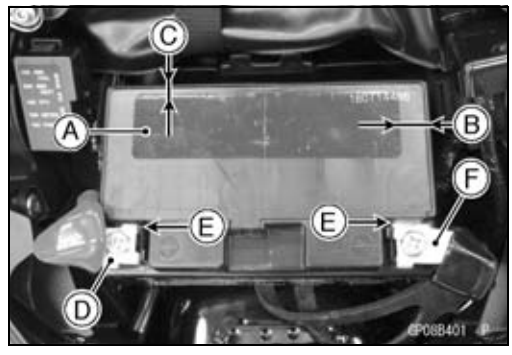

- Turn the ignition switch off.
- Put the battery into the battery case.
- Check that the pad [A] is in place on the battery.
  16.5 mm (0.65 in.) [B]
  2 mm (0.08 in.) [C]
- Install the positive (+) cable [D] first.

○When installing the terminals, make the gaps [E] between the terminals and battery.

- Install the negative (–) cable [F].
- Apply a light coat of grease on the terminals to prevent corrosion.
- Cover the both terminals with each cap.
- Install the band.
- Install the seat (see Seat Installation in the Frame chapter).

★When installing the new battery, follow the below procedures.

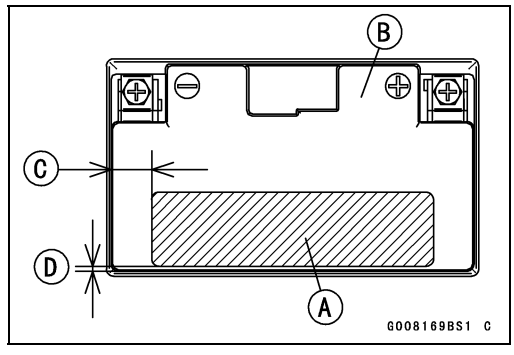

- Install the new pad [A] to the battery [B] as shown.
  About 16.5 mm (0.65 in.) [C]
  About 2 mm (0.08 in.) [D]
- Inspect the battery voltage (see Charging Condition Inspection).

Precautions

1) No need of topping-up
   No topping-up is necessary in this battery until it ends its life under normal use. Forcibly prying off the seal cap to add water is very dangerous. Never do that.
2) Refreshing charge.
   Give refresh charge for 5 to 10 hours with charge current shown in the text (see Refreshing Charge).

Battery

When a fast charge is inevitably required, do it following precisely the maximum charge current and time conditions indicated on the battery.

NOTICE

This battery is designed to sustain no unusual deterioration if refresh-charged according to the method specified above. However, the battery's performance may be reduced noticeably if charged under conditions other than given above. Never remove the seal cap during refresh charge.
If by chance an excessive amount of gas is generated due to overcharging, the relief valve releases the gas to keep the battery normal.

3) When you do not use the motorcycle for months.
Give a refresh charge before you store the motorcycle and store it with the negative cable removed. Give a refresh charge **once a month** during storage.
4) Battery life.
If the battery will not start the engine even after several refresh charges, the battery has exceeded its useful life. Replace it (Provided, however, the vehicle's starting system has no problem).

⚠ DANGER

Batteries produce an explosive gas mixture of hydrogen and oxygen that can cause serious injury and burns if ignited. Keep the battery away from sparks and open flames during charging. When using a battery charger, connect the battery to the charger before turning on the charger. This procedure prevents sparks at the battery terminals which could ignite any battery gases. The electrolyte contains sulfuric acid. Be careful not to have it touch your skin or eyes. If touched, wash it off with liberal amount of water and seek medical attention for more severe burns.

Interchange

A sealed battery can fully display its performance only when combined with a proper vehicle electric system. Therefore, replace a sealed battery only on a motorcycle which was originally equipped with a sealed battery.

Be careful, if a sealed battery is installed on a motorcycle which had an ordinary battery as original equipment, the sealed battery's life will be shortened.

Charging Condition Inspection

○Battery charging condition can be checked by measuring battery terminal voltage with a digital meter [A].

● Remove:
Battery (see Battery Removal)

● Measure the battery terminal voltage.

NOTE

○*Measure with a digital voltmeter which can be read one decimal place voltage.*

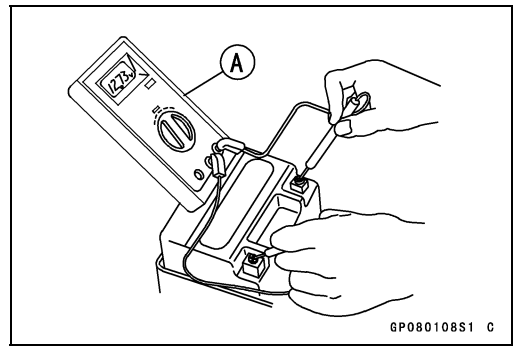

★If the reading is 12.8 V or more, no refresh charge is required, however, if the read is below the specified, refresh charge is required.

Battery Terminal Voltage
Standard: 12.8 V or more

Terminal Voltage (V) [A]
Battery Charge Rate (%) [B]
Good [C]
Refresh charge is required [D]

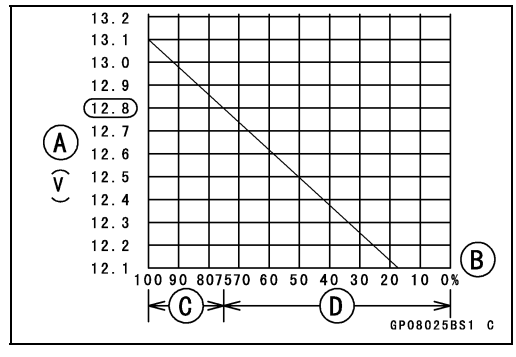

Battery

Refreshing Charge

- Remove the battery (see Battery Removal).
- Do refresh charge by following method according to the battery terminal voltage.

⚠ WARNING

This battery is sealed type. Charge with current and time as stated below.

Terminal Voltage: 12.0 ~ 12.7 V
Standard Charge: 0.9 A × 5 ~ 10 h (see following chart)
Quick Charge: 4.5 A × 1 h

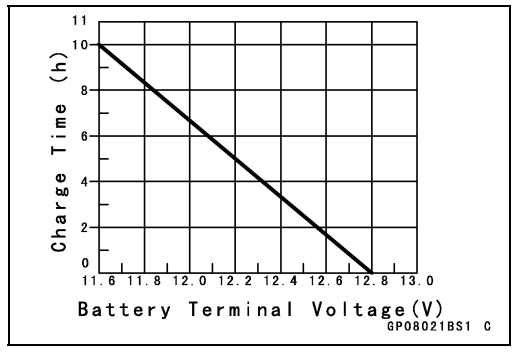

NOTICE

If possible, do not quick charge. If quick charge is done unavoidably, do standard charge later on.

Terminal Voltage: 12 V or lower
Charging Method: 0.6 A × 20 h

Kawasaki-recommended chargers:
Battery Mate 150-9
OptiMate PRO 4-S/PRO S/PRO2
Yuasa MB-2040/2060
Christie C10122S

★If the above chargers are not available, use equivalent one.

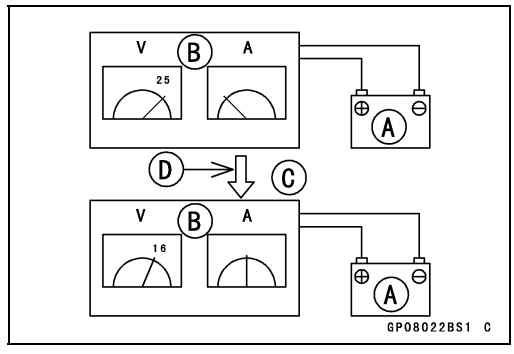

NOTE

○*Increase the charging voltage to a maximum voltage of 25 V if the battery will not accept current initially. Charge for no more than 5 minutes at the increased voltage then check if the battery is drawing current. If the battery will accept current decrease the voltage and charge by the standard charging method described on the battery case. If the battery will not accept current after 5 minutes, replace the battery.*

Battery [A]
Battery Charger [B]
Standard Value [C]
Current starts to flow [D].

- Determine the battery condition after refresh charge.

○Determine the condition of the battery left for 30 minutes after completion of the charge by measuring the terminal voltage according to the table below.

Criteria	Judgement
12.8 V or higher	Good
12.0 ~ lower than 12.8 V	Charge insufficient → Recharge
lower than 12.0 V	Unserviceable → Replace

Charging System

Alternator Cover Removal

- Drain:
  Engine Oil (see Engine Oil Change in the Periodic Maintenance chapter)
- Remove:
  Left Middle Fairing (see Middle Fairing Removal in the Frame chapter)
  Left Lower Fairing (see Lower Fairing Removal in the Frame chapter)
- Open the clamp [A].
- Cut the band [B].

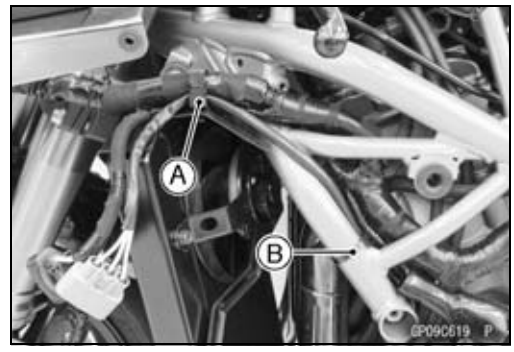

- Place a suitable container under the alternator cover [A].
- Remove:
  Alternator Cover Bolts [B]
  Alternator Cover

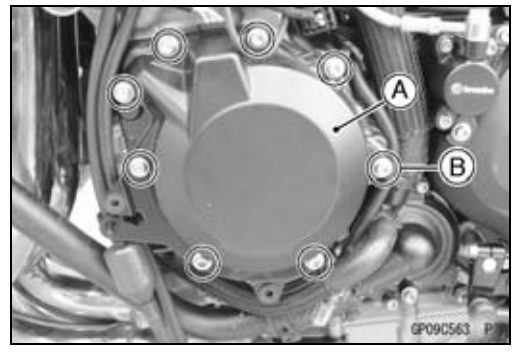

Alternator Cover Installation

- Using a high flash-point solvent, clean off any oil or dirt that may be on the mating surface. Dry them with a clean cloth.
- Apply liquid gasket to the alternator lead grommet and crankcase halves mating surface [A] on the front and rear sides of the cover mount.

  Sealant - Liquid Gasket, TB1211F: 92104-0004
- Check that dowel pins [B] are in place on the crankcase.
- Replace the alternator cover gasket with a new one.

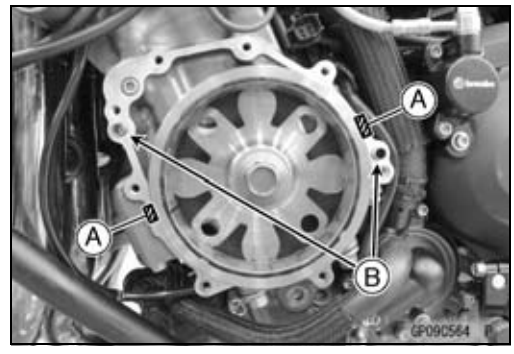

- Install the bracket [A].
- When installing the clamp [B], insert the clamp from the engine side.
- Tighten:

  Torque - Alternator Cover Bolts: 10 N·m (1.0 kgf·m, 89 in·lb)
- Run the alternator lead correctly (see Cable, Wire, and Hose Routing section in the Appendix chapter).
- Install the removed parts (see appropriate chapters).

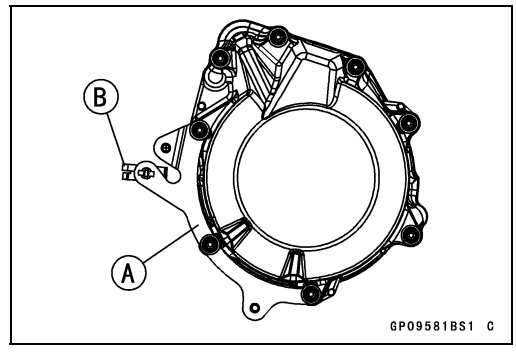

Charging System

Stator Coil Removal

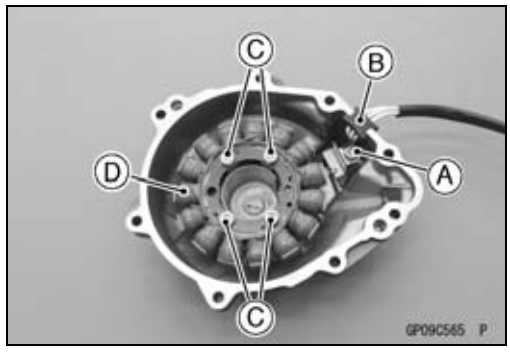

- Remove:
  Alternator Cover (see Alternator Cover Removal)
  Alternator Lead Holding Plate Bolt [A] and Plate
  Alternator Lead Grommet [B]
  Stator Coil Bolts [C]
- Remove the stator coil [D] from the alternator cover.

Stator Coil Installation

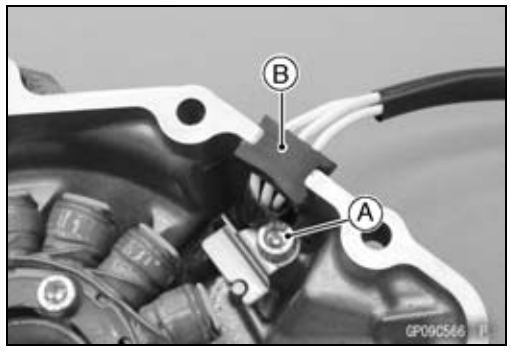

- Apply a non-permanent locking agent to the threads of the stator coil bolts and tighten them.

  Torque - Stator Coil Bolts: 12 N·m (1.2 kgf·m, 106 in·lb)

- Secure the alternator lead with a holding plate.
- Apply a non-permanent locking agent to the threads of the plate bolt [A] and tighten it.

  Torque - Alternator Lead Holding Plate Bolt: 10 N·m (1.0 kgf·m, 89 in·lb)

- Using a high flash-point solvent, clean off any oil or dirt that may be on the liquid gasket coating area. Dry them with a clean cloth.
- Apply liquid gasket to the circumference of the alternator lead grommet [B], and fit the grommet into the notch of the cover securely.

  Sealant - Liquid Gasket, TB1211F: 92104-0004

- Install the alternator cover (see Alternator Cover Installation).

Alternator Rotor Removal

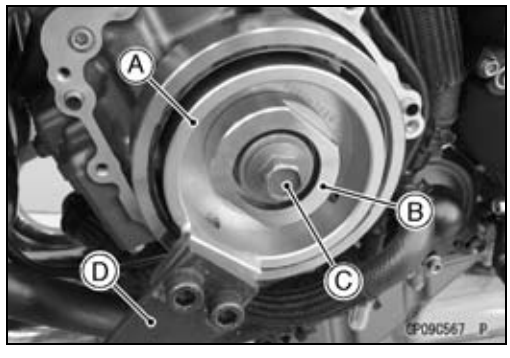

- Remove:
  Alternator Cover (see Alternator Cover Removal)
- Hold the alternator rotor steady with the rotor holder [A] and stopper [B].
- Remove the rotor bolt [C] and washer.

  Special Tools - Grip [D]: 57001-1591
  Rotor Holder: 57001-1666
  Stopper: 57001-1829

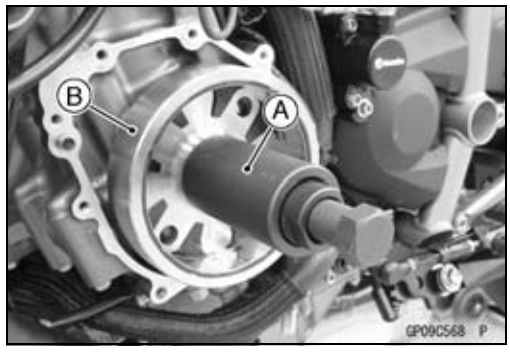

- Using the flywheel puller [A], remove the alternator rotor [B] from the crankshaft.

  Special Tool - Flywheel Puller Assembly, M38 × 1.5/M35 × 1.5: 57001-1615

NOTICE
Do not attempt to strike the alternator rotor itself. Striking the rotor can cause the magnets to lose their magnetism.

Charging System

Alternator Rotor Installation

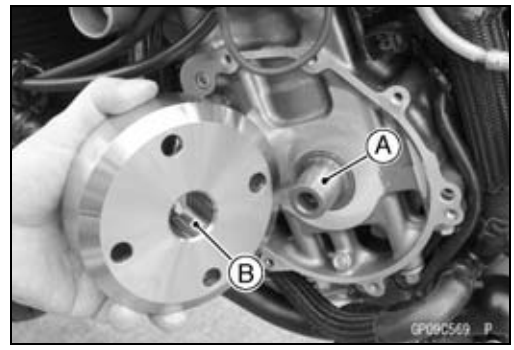

- Using a cleaning fluid, clean off any oil or dirt on the following portions and dry them with a clean cloth.
  Crankshaft Tapered Portion [A]
  Alternator Rotor Tapered Portion [B]

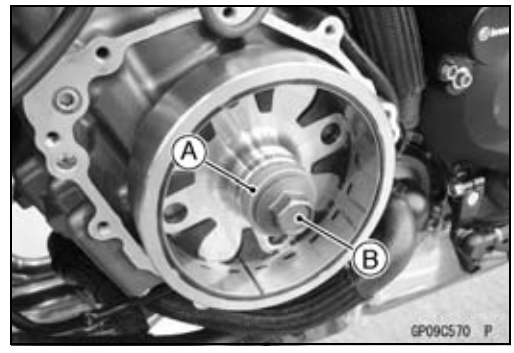

- Using a cleaning fluid, clean off any oil or dirt on the washer [A] and dry it with a clean cloth.
- Install the washer and alternator bolt [B].

NOTE

○*Confirm the alternator rotor fit or not to the crankshaft before tightening it with specified torque.*

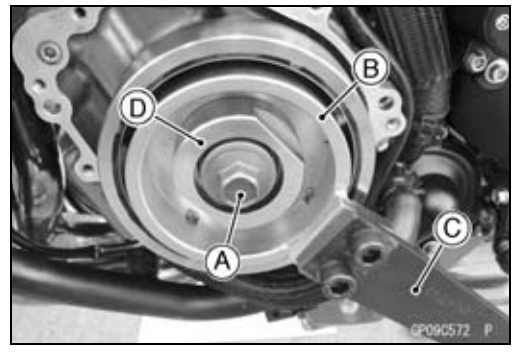

- Tighten the alternator rotor bolt [A] with 70 N·m (7.0 kgf·m, 52 ft·lb) of torque while holding the alternator rotor steadily with the holder [B].

Special Tools - Grip [C]: 57001-1591
Rotor Holder: 57001-1666
Stopper [D]: 57001-1829

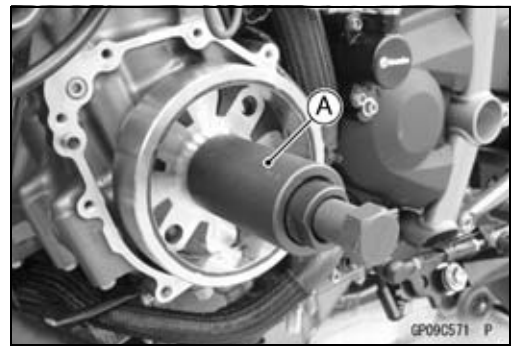

- Remove the rotor bolt and washer.
- Check the tightening torque with flywheel puller [A].

Special Tool - Flywheel Puller Assembly, M38 × 1.5/M35 × 1.5: 57001-1615

★If the rotor is not pulled out with 20 N·m (2.0 kgf·m, 15 ft·lb) of drawing torque, it is installed correctly.

★If the rotor is pulled out with under 20 N·m (2.0 kgf·m, 15 ft·lb) of drawing torque, clean off any oil dirt or flaw of the crankshaft and rotor tapered portion, and dry them with a clean cloth. Then, confirm that it is not pulled out with above torque.

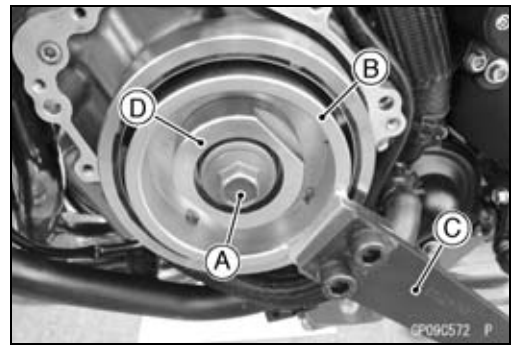

- Install the washer and rotor bolt.
- Tighten the alternator rotor bolt [A] while holding the alternator rotor steadily with the holder [B].

Special Tools - Grip [C]: 57001-1591
Rotor Holder: 57001-1666
Stopper [D]: 57001-1829

Torque - Alternator Rotor Bolt: 155 N·m (15.8 kgf·m, 114 ft·lb)

- Install the alternator cover (see Alternator Cover Installation).

Charging System

Charging Voltage Inspection

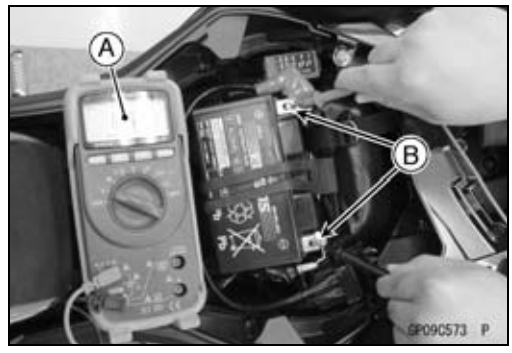

- Check the battery condition (see Charging Condition Inspection).
- Warm up the engine to obtain actual alternator operating conditions.
- Check that the ignition switch is turned off, and connect a tester [A] to the battery terminals [B].
- Start the engine, and note the voltage readings at various engine speeds (except idling engine speed) with the headlight turned on and then turned off (To turn off the headlight, disconnect the headlight connector on the headlight unit.). The readings should show nearly battery voltage when the engine speed is low, and, as the engine speed rises, the readings should also rise. But they must be kept under the specified voltage.

Charging Voltage **@25°C (77°F)**

Connections		Reading
Tester (+) to	Tester (–) to	
Battery (+)	Battery (–)	DC 14.6 ~ 15.0 V

- Turn off the ignition switch to stop the engine, and disconnect the tester.

★If the charging voltage is kept between the values given in the table, the charging system is considered to be working normally.

★If the charging voltage is much higher than the values specified in the table, the regulator/rectifier is defective or the regulator/rectifier leads are loose or open.

★If the charging voltage does not rise as the engine speed increases, then the regulator/rectifier is defective or the alternator output is insufficient for the loads. Check the alternator and regulator/rectifier to determine which part is defective.

Alternator Inspection

There are three types of alternator failures: short, open (wire burned out), or loss in rotor magnetism. A short or open in one of the coil wires will result in either a low output, or no output at all. A loss in rotor magnetism, which may be caused by dropping or hitting the alternator, by leaving it near an electromagnetic field, or just by aging, will result in low output.

Charging System

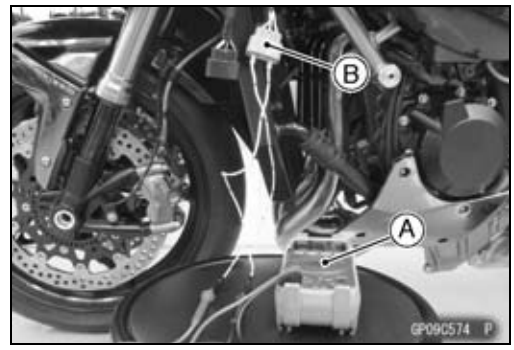

● To check the alternator output voltage, do the following procedures.
○Turn the ignition switch off.
○Remove the left middle fairing (see Middle Fairing Removal in the Frame chapter).
○Connect a tester [A] as shown in the table 1.
Alternator Lead Connector [B]
○Start the engine.
○Run it at the rpm given in the table 1.
○Note the voltage readings (total 3 measurements).

Table 1 Alternator Output Voltage @4 000 r/min (rpm)

Connections		Reading
Tester (+) to	Tester (–) to	
One White lead	Another White lead	AC 47.2 ~ 70.8 V

★If the output voltage shows the value in the table, the alternator operates properly.
★If the output voltage shows a much lower reading than that given in the table, stop the engine and inspect the stator coil resistance.
● Check the stator coil resistance as follows.
○Stop the engine.
○Connect the tester as shown in the table 2.
○Note the readings (total 3 measurement).

Table 2 Stator Coil Resistance @20°C (68°F)

Connections		Reading
Tester (+) to	Tester (–) to	
One White lead	Another White lead	0.114 ~ 0.170 Ω

When measuring the resistance, use a tester that can measure the standard value.

★If there is more resistance than shown in the table, or no tester reading (infinity) for any two leads, the stator has an open lead and must be replaced. Much less than this resistance means the stator is shorted, and must be replaced.
● Measure the resistance between each of the black leads and chassis ground.
★Any tester reading less than infinity (∞) indicates a short, necessitating stator replacement.
★If the stator coils have normal resistance, but the voltage check showed the alternator to be defective; then the rotor magnets have probably weakened, and the rotor must be replaced.

Charging System

Regulator/Rectifier Removal

- Remove:
  Left Middle Fairing (see Middle Fairing Removal in the Frame chapter)
  Screws [A]
  Inner Cover [B]

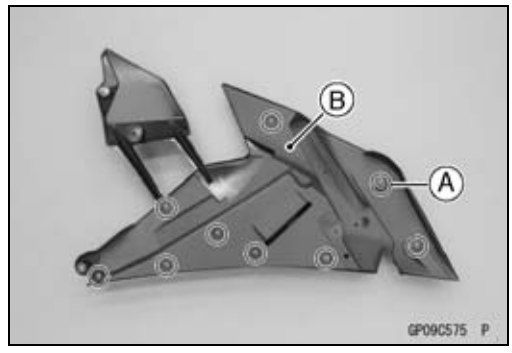

- Remove:
  Screws [A]
  Regulator/Rectifier [B] with Bracket [C]

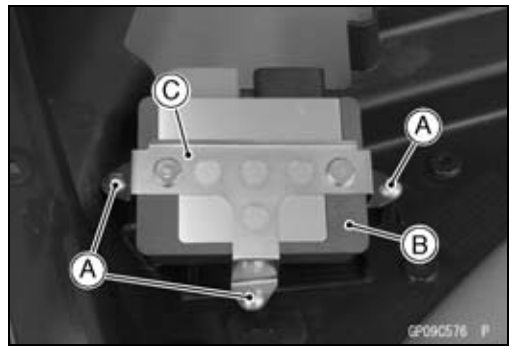

- Remove:
  Regulator/Rectifier Mounting Nuts [A]
  Regulator/Rectifier [B]

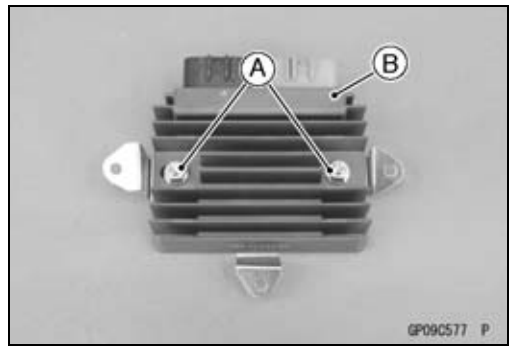

Regulator/Rectifier Installation

- Installation is the reverse of removal.
- Tighten:

Torque - Regulator/Rectifier Mounting Nuts: 6.0 N·m (0.61 kgf·m, 53 in·lb)

- When installing the inner cover, install the following screws.
  Screw [A]: L = 10 mm (0.39 in.)
  Screws [B]: L = 16 mm (0.63 in.)

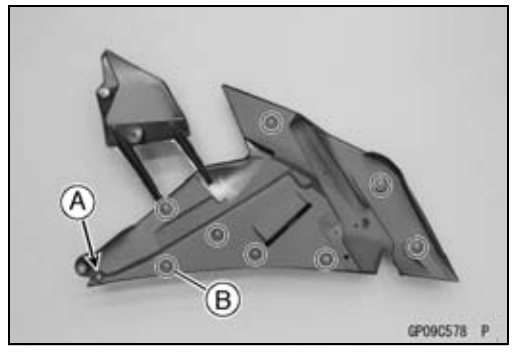

Charging System

Regulator/Rectifier Inspection

- Refer to the Charging System Troubleshooting for the Regulator/Rectifier Inspection.

Charging System Troubleshooting

- Before inspection, remove all accessories that consume electrical power.

NOTE

○*Even when the charging system is working properly, the battery may discharge if the motorcycle is equipped with too many accessories.*

- Pay attention to riding conditions and the customer's riding habits which could affect the charging system such as:

Frequent use at low engine speed
Frequent and unnecessary brake pedal dragging
→ Battery Discharged

- Recharge the battery if it is discharged.

Charging System

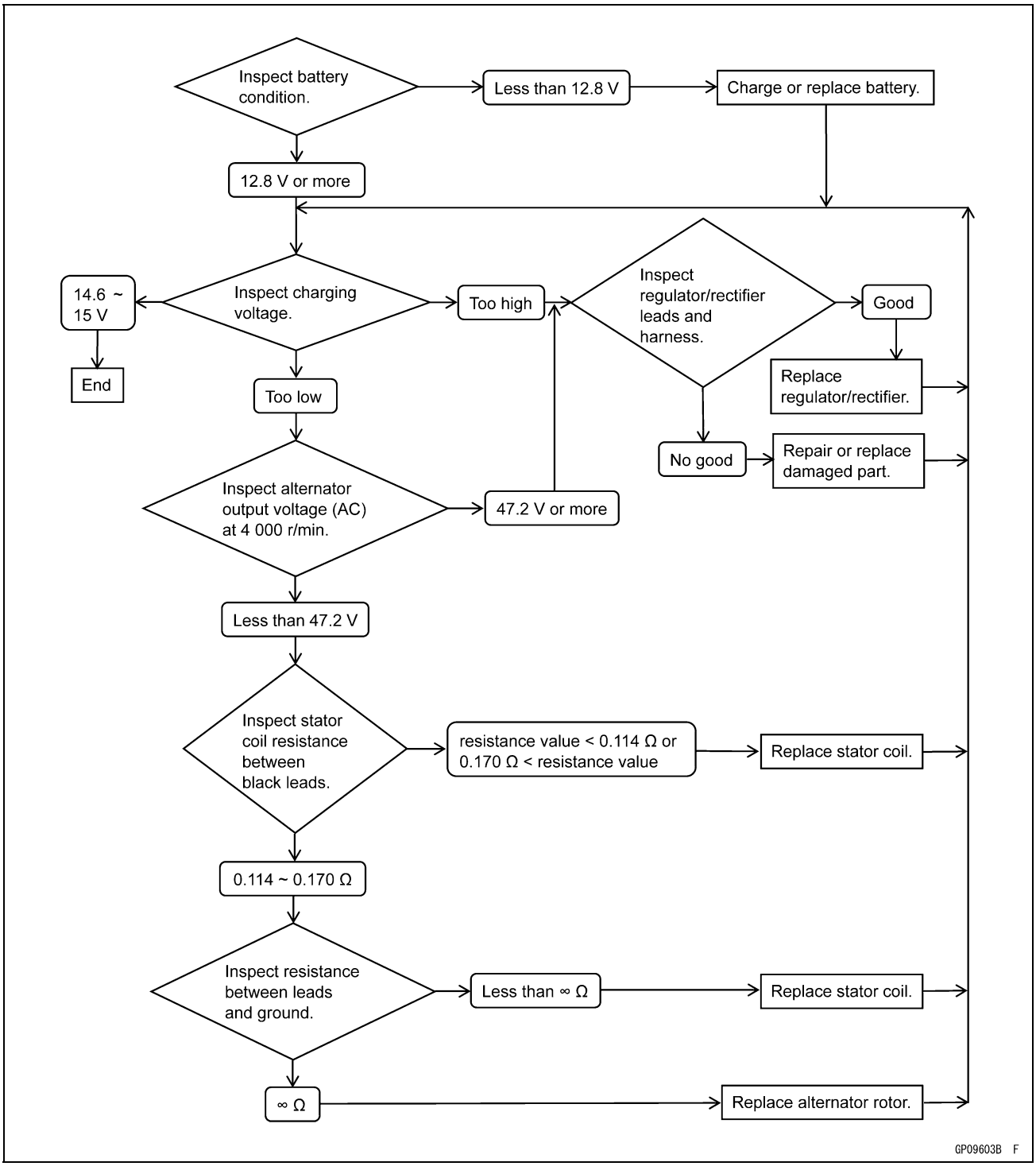

Charging System

Charging System Circuit

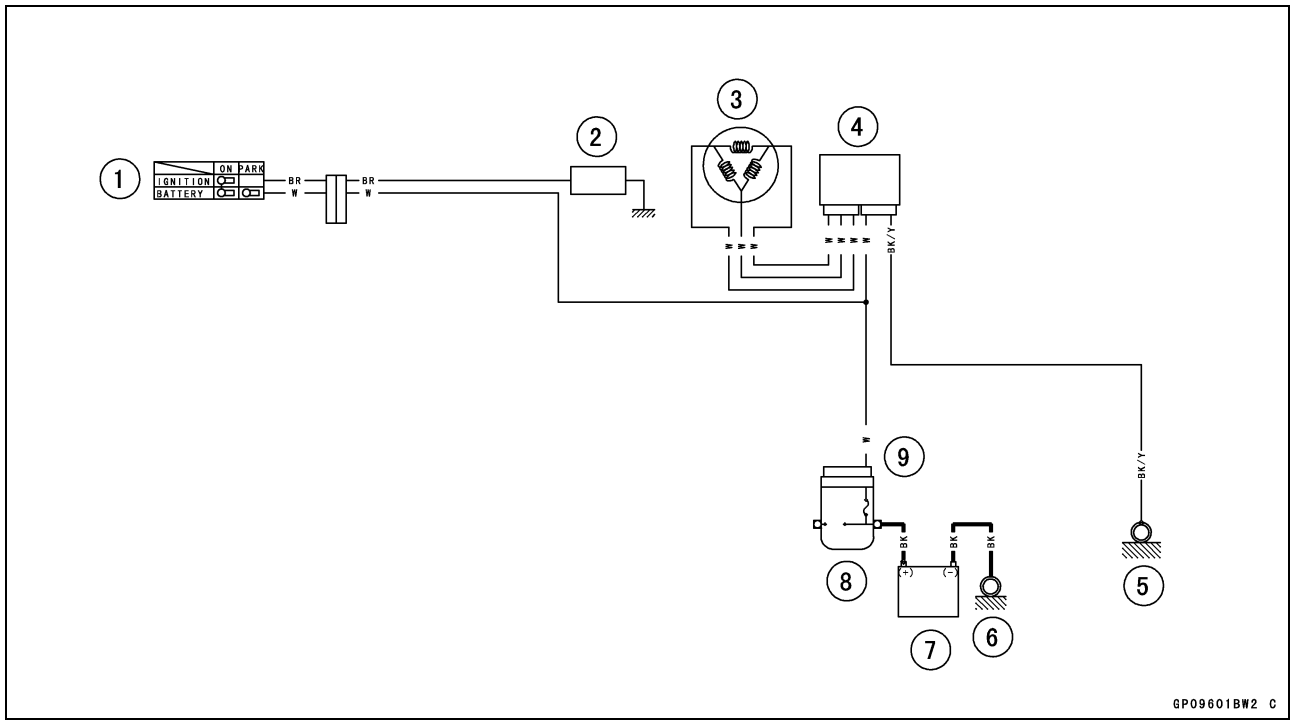

1. Ignition Switch
2. Load
3. Alternator
4. Regulator/Rectifier
5. Frame Ground (1)
6. Engine Ground
7. Battery
8. Starter Relay
9. Main Fuse 30 A

Ignition System

⚠ WARNING

The ignition system produces extremely high voltage. Do not touch the spark plug, stick coil or stick coil lead while the engine is running, or you could receive a severe electrical shock.

NOTICE

Do not disconnect the battery cables or any other electrical connections when the ignition switch is on, or while the engine is running. This is to prevent ECU damage.
Do not install the battery backwards. The negative side is grounded. This is to prevent damage to the ECU.

Crankshaft Sensor Removal

NOTICE

Never drop the sensor, especially on a hard surface. Such a shock to the sensor can damage it.



- Remove:
  Clutch Cover (see Clutch Cover Removal in the Clutch chapter)
  Right Fuel Tank Cover (see Fuel Tank Cover Removal in the Frame chapter)
  Right Inner Cover (see Inner Cover Removal in the Frame chapter)
- Remove the crankshaft sensor lead connector [A] from the bracket to outside, and disconnect it.

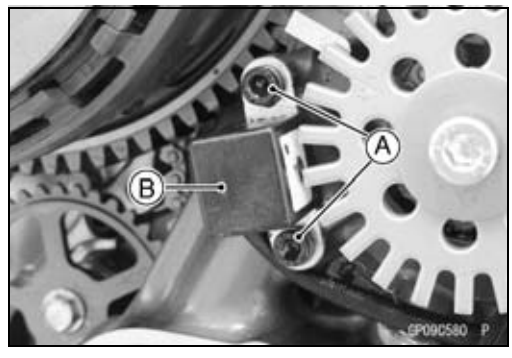

- Remove:
  Crankshaft Sensor Bolts [A]
  Crankshaft Sensor [B]

Crankshaft Sensor Installation

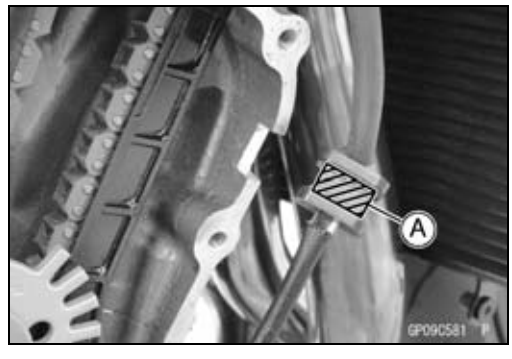

- Tighten:
  Torque - Crankshaft Sensor Bolts: 6.0 N·m (0.61 kgf·m, 53 in·lb)
- Using a high flash-point solvent, clean off any oil or dirt that may be on the liquid gasket coating area. Dry them with a clean cloth.
- Apply liquid gasket [A] to whole periphery of the crankshaft sensor lead grommet groove.
  Sealant - Liquid Gasket, TB1211F: 92104-0004

Ignition System

- Install:
  Clutch Cover (see Clutch Cover Installation in the Clutch chapter)
- Run the crankshaft sensor lead correctly (see Cable, Wire, and Hose Routing section in the Appendix chapter).
- Install the removed parts (see appropriate chapters).

Crankshaft Sensor Inspection

- Disconnect the crankshaft sensor lead connector (see Crankshaft Sensor Removal).
- Set a tester [A], and connect it to the crankshaft sensor lead connector [B].

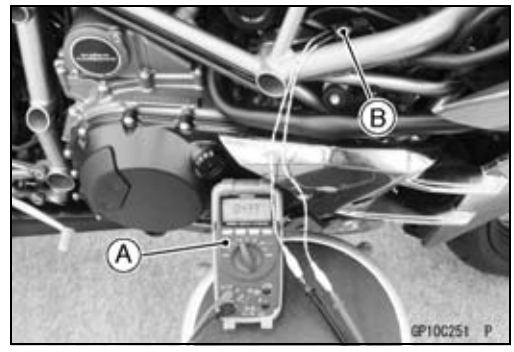

Crankshaft Sensor Resistance
Connections: Y lead ← → BK lead
Standard: 376 ~ 564 Ω @20°C (68°F)

★If there is more resistance than the specified value, the coil has an open lead and must be replaced. Much less than this resistance means the coil is shorted, and must be replaced.

- Measure the resistance between the crankshaft sensor leads and chassis ground.

★Any tester reading less than infinity (∞) indicates a short, necessitating replacement of the crankshaft sensor.

Crankshaft Sensor Peak Voltage Inspection

NOTE

○*Be sure the battery is fully charged.*
○*Using the peak voltage adapter [A] is more reliable way to determine the condition of the crankshaft sensor than crankshaft sensor internal resistance measurements.*

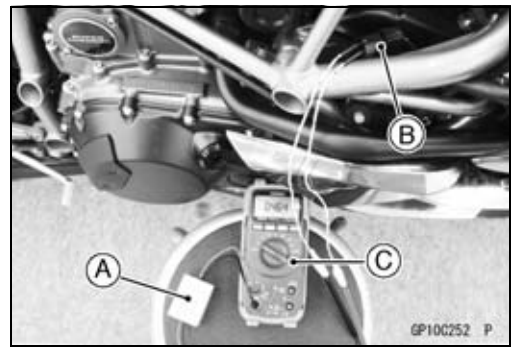

- Disconnect the crankshaft sensor lead connector [B] (see Crankshaft Sensor Removal).
- Set a tester [C], and connect it to the peak voltage adapter.

Special Tools - Peak Voltage Adapter: 57001-1415
Type: KEK-54-9-B

- Connect the adapter to the terminals of the crankshaft sensor lead connector.

Connections:

Crankshaft Sensor Lead		Peak Voltage Adapter		Tester
Y lead	←	R lead	→	(+)
BK lead	←	BK lead	→	(–)

- Turn the ignition switch on.
- Slide the engine start/stop switch turn the engine 4 ~ 5 seconds with the transmission gear in neutral to measure the crankshaft sensor peak voltage.
- Repeat the measurement 5 or more times.

Crankshaft Sensor Peak Voltage
Standard: 3 V or more

★If the reading is less than the standard, inspect the crankshaft sensor (see Crankshaft Sensor Inspection).

Camshaft Position Sensor Removal

- Remove the fuel tank (see Fuel Tank Removal in the Fuel System (DFI) chapter).
- Disconnect the camshaft position sensor lead connector [A].



- Remove:
  Camshaft Position Sensor Bolt [A]
  Camshaft Position Sensor [B]

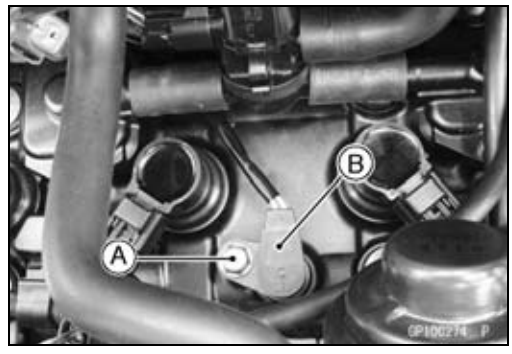

Camshaft Position Sensor Installation

- Apply grease to the O-ring [A].
- Tighten:

Torque - Camshaft Position Sensor Bolt: 10 N·m (1.0 kgf·m, 89 in·lb)

○When installing the sensor which is fastened by bolt, tighten the bolt after placing the sensor on the bottom surface completely.

- Run the lead correctly (see Cable, Wire, and Hose Routing section in the Appendix chapter).
- Install the removed parts (see appropriate chapters).

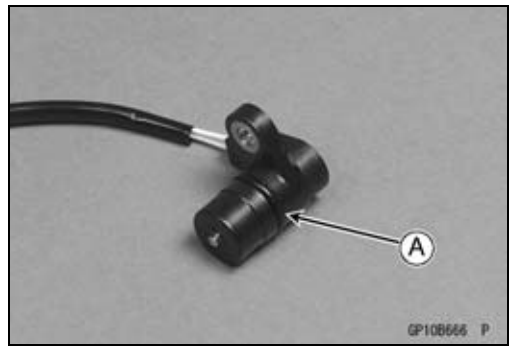

Camshaft Position Sensor Inspection

- Disconnect the camshaft position sensor lead connector (see Camshaft Position Sensor Removal).
- Set a tester [A] and connect it to the camshaft position sensor lead connector [B].

Camshaft Position Sensor Resistance
Connections: W/Y lead ←→ Y lead
Standard: 400 ~ 460 Ω @20°C (68°F)

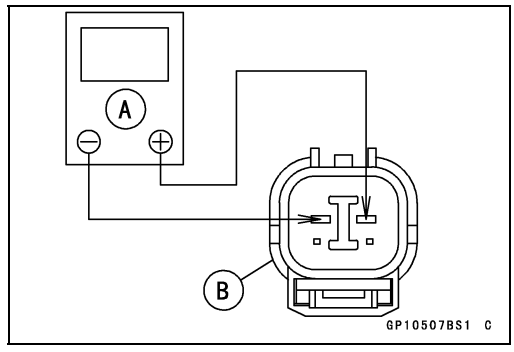

★If there is more resistance than the specified value, the sensor coil has an open lead and must be replaced. Much less than this resistance means the sensor coil is shorted, and must be replaced.

- Measure the resistance between the camshaft position sensor leads and chassis ground.

★Any tester reading less than infinity (∞) indicates a short, necessitating replacement of the camshaft position sensor.

Ignition System

Camshaft Position Sensor Peak Voltage Inspection

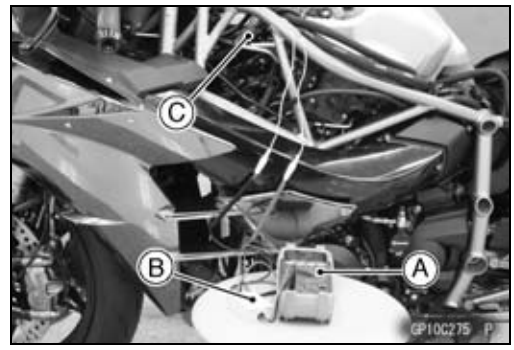

NOTE

○*Be sure the battery is fully charged.*

- Disconnect the camshaft position sensor lead connector (see Camshaft Position Sensor Removal).
- Set a tester [A] and connect it to the peak voltage adapter [B].

Special Tool - Peak Voltage Adapter: 57001-1415
Type: KEK-54-9-B

- Connect the adapter to the terminals of the camshaft position sensor lead connector [C].

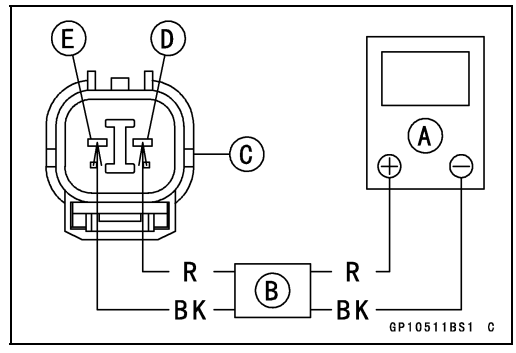

Connections:

Camshaft Position Sensor Lead Connector		Peak Voltage Adapter		Tester
Y lead [D]	←	R lead	→	(+)
W/Y lead [E]	←	BK lead	→	(–)

- Turn the ignition switch on.
- Slide the engine start/stop switch, turn the engine 4 ~ 5 seconds with the transmission in neutral to measure the camshaft position sensor peak voltage.
- Repeat the measurements 5 or more times.

Camshaft Position Sensor Peak Voltage
Standard: 0.6 V or more

★If the reading is less than the standard, inspect the camshaft position sensor (see Camshaft Position Sensor Inspection).

Timing Rotor Removal

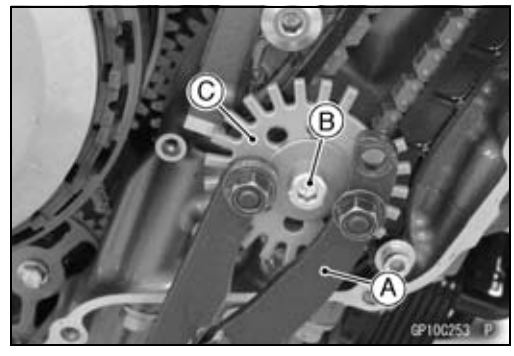

- Remove the crankshaft sensor (see Crankshaft Sensor Removal).
- Holding the timing rotor with the flywheel & pulley holder [A] and remove the timing rotor bolt [B].

Special Tool - Flywheel & Pulley Holder: 57001-1605

- Remove the timing rotor [C].

Timing Rotor Installation

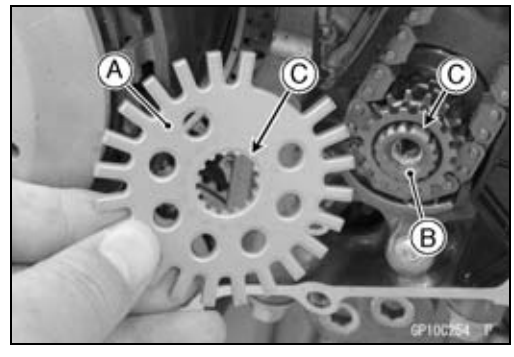

- Install the timing rotor [A] on the crankshaft [B] with their teeth [C] aligned.
- Apply a non-permanent locking agent to the threads of the timing rotor bolt.
- Holding the timing rotor with the flywheel & pulley holder and tighten the timing rotor bolt.

Torque - Timing Rotor Bolt: 39 N·m (4.0 kgf·m, 29 ft·lb)

Special Tool - Flywheel & Pulley Holder: 57001-1605

- Install the crankshaft sensor (see Crankshaft Sensor Installation).

Ignition System

Stick Coil Removal

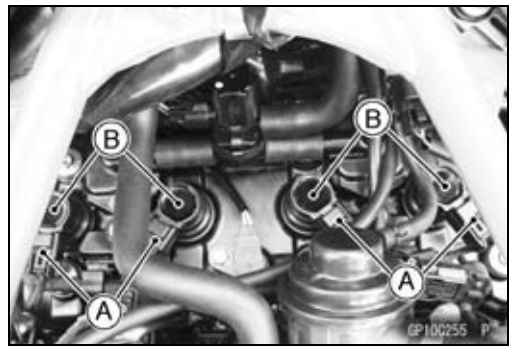

NOTICE
Never drop the stick coils, especially on a hard surface. **Such a shock to the stick coils can damage it.**

- Remove:
  Fuel Tank (see Fuel Tank Removal in the Fuel System (DFI) chapter)
- Disconnect the stick coil connectors [A].
- Remove the stick coils [B].

NOTICE
Do not pry the connector part of the coil while removing the coil.

Stick Coil Installation

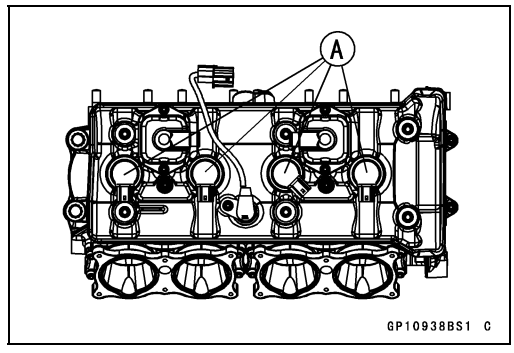

- Insert the stick coils [A] so that the coil heads face as shown.

NOTICE
Do not tap the coil head while installing the coil.

- After installation, be sure the stick coils are installed securely by pulling up them lightly.
- Run the leads correctly (see Cable, Wire, and Hose Routing section in the Appendix chapter).
- Install the removed parts (see appropriate chapters).

Stick Coil Inspection

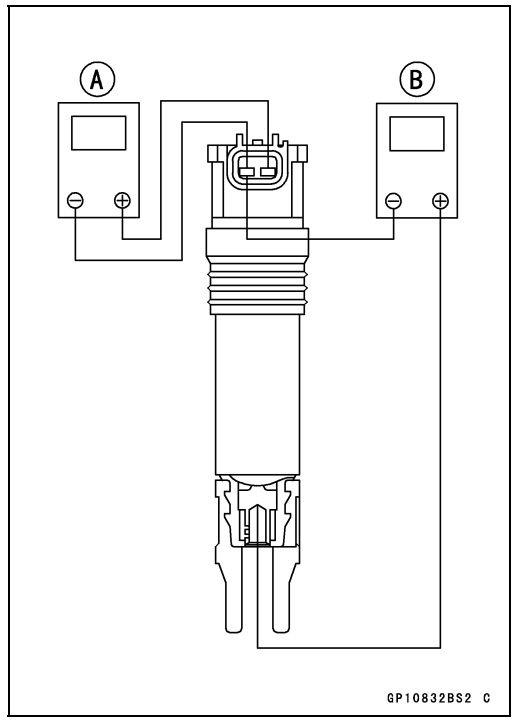

- Remove the stick coils (see Stick Coil Removal).
- Measure the primary winding resistance [A] as follows.

○Connect a tester between the coil terminals.

- Measure the secondary winding resistance [B] as follows.

○Connect the tester between the plug terminal and (–) coil terminal.

Stick Coil Winding Resistance

Primary Windings:	**1.19 ~ 1.61 Ω @20°C (68°F)**
Secondary Windings:	**10.2 ~ 13.8 kΩ @20°C (68°F)**

★If the tester does not read as specified, replace the coil.

Stick Coil Primary Peak Voltage Inspection

NOTE

○*Be sure the battery is fully charged.*

Ignition System

- Remove the stick coils (see Stick Coil Removal), but do not remove the spark plugs.
- Measure the primary peak voltage as follows.

○Install the new spark plug [A] into each stick coil [B], and ground them onto the engine.
○Connect the peak voltage adapter [C] into a tester [D].
○Connect the adapter to the lead wire - peak voltage adapter [E] which is connected between the stick coil connector and stick coil.
ECU [F]
Battery [G]

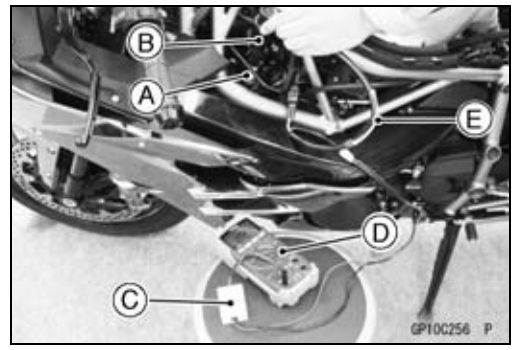

Special Tools - Peak Voltage Adapter: 57001-1415
Type: KEK-54-9-B
Lead Wire - Peak Voltage Adapter: 57001 -1449

Primary Lead Connection
Adapter (R, +) to lead wire-peak voltage adapter (W)
Adapter (BK, –) to lead wire-peak voltage adapter (R)

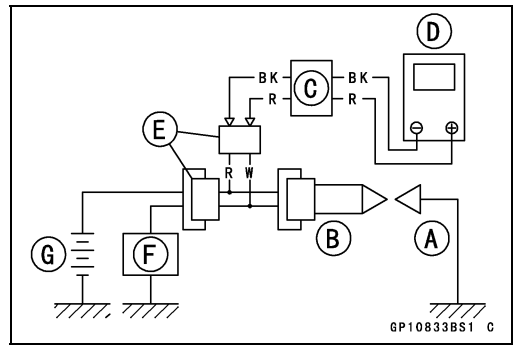

⚠ WARNING

To avoid extremely high voltage shocks, do not touch the spark plugs or tester connections.

- Slide the engine start/stop switch to run position.
- Turn the ignition switch on.
- Slide the engine start/stop switch, turn the engine 4 ~ 5 seconds with the transmission in neutral to measure the primary peak voltage.
- Repeat the measurements 5 times for one stick coil.

Stick Coil Primary Peak Voltage
Standard: 100 V or more

- Repeat the test for the other stick coil.

★If the reading is less than the specified value, check the following.
Stick Coils (see Stick Coil Inspection)
Crankshaft Sensor (see Crankshaft Sensor Inspection)
ECU (see ECU Power Supply Inspection in the Fuel System (DFI) chapter)

Spark Plug Removal

- Refer to the Spark Plug Replacement in the Periodic Maintenance chapter.

Spark Plug Installation

- Refer to the Spark Plug Replacement in the Periodic Maintenance chapter.

Spark Plug Condition Inspection

- Refer to the Spark Plug Condition Inspection in the Periodic Maintenance chapter.

Ignition System

Interlock Operation Inspection

● Raise the rear wheel off the ground with the stand.

1st Check

● Start the engine to the following conditions.

Condition:
Transmission Gear → 1st Position
Clutch Lever → Release
Side Stand → Down or Up

○Turn the ignition switch on and slide the engine start/stop switch.
○Then the starter motor should not turn when the starter system circuit is normality.
★If the engine is start, inspect the starter lockout switch, gear position sensor and relay box.

2nd Check

● Start the engine to the following conditions.

Condition:
Transmission Gear → 1st Position
Clutch Lever → Pulled in
Side Stand → Up

○Turn the ignition switch on and slide the engine start/stop switch.
○Then the starter motor should turn when the starter system circuit is normality.
★If the starter motor is not turn, inspect the starter lockout switch, side stand switch, relay box and starter relay.

3rd Check

● Inspect the engine for its secure stop after the following operations are completed.
● Run the engine to the following conditions.

Condition:
Transmission Gear → 1st Position
Clutch Lever → Release
Side Stand → Up

● Set the side stand on the ground, then the engine will stop.
★If the engine does not stop, inspect the gear position sensor, side stand switch and relay box.
★If their parts are normality, replace the ECU.

Ignition System

IC Igniter Inspection

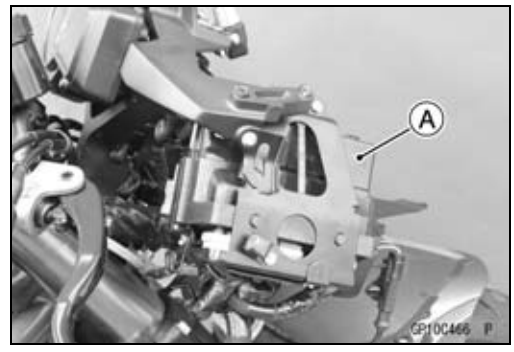

○The IC igniter is built in the ECU [A].

● Refer to the following items.

Interlock Operation Inspection (see Interlock Operation Inspection)

Ignition System Troubleshooting (see Ignition System section)

ECU Power Supply Inspection (see ECU Power Supply Inspection in the Fuel System (DFI) chapter)

Ignition System

Ignition System Troubleshooting

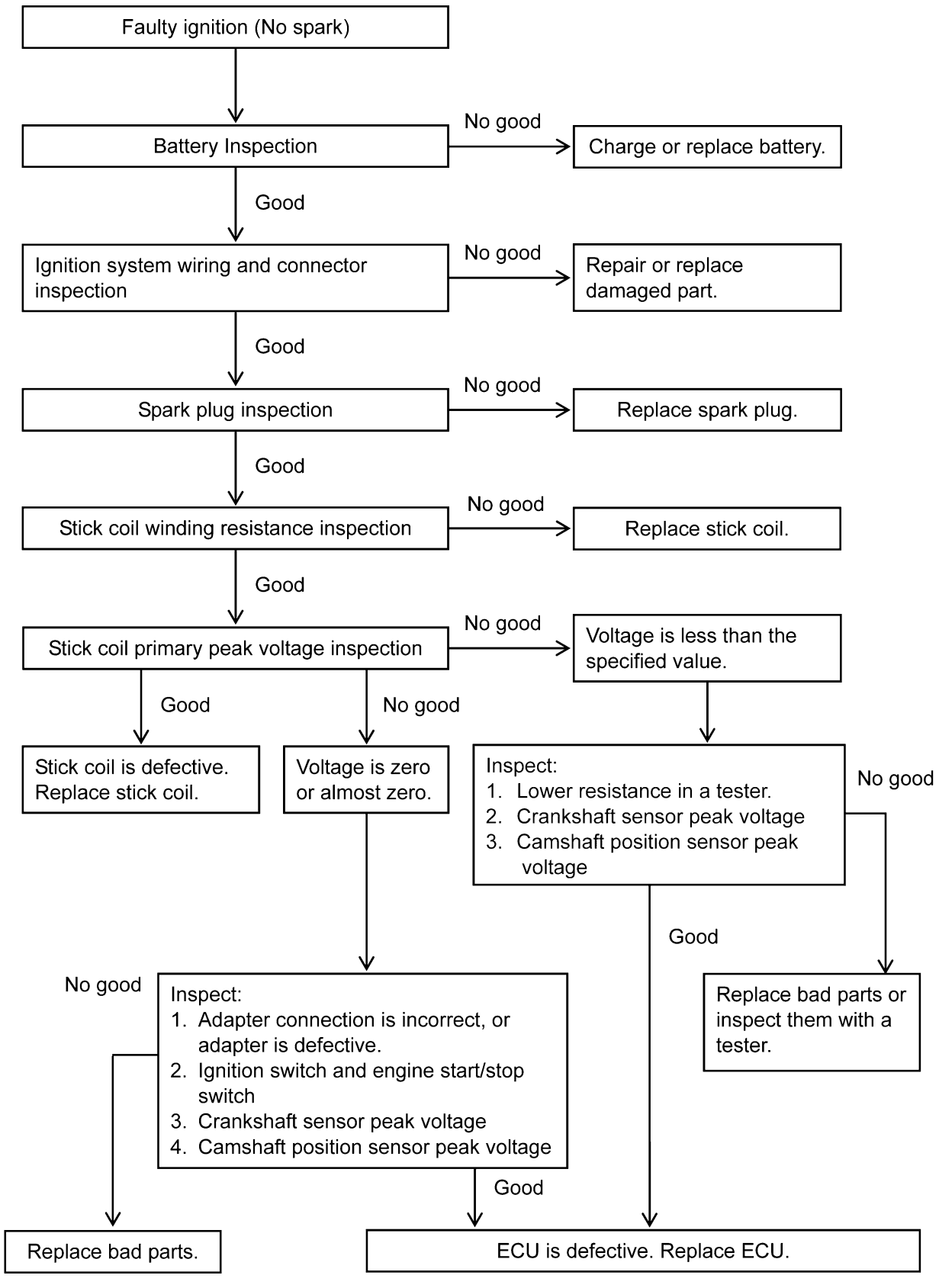

Ignition System

Ignition System Circuit

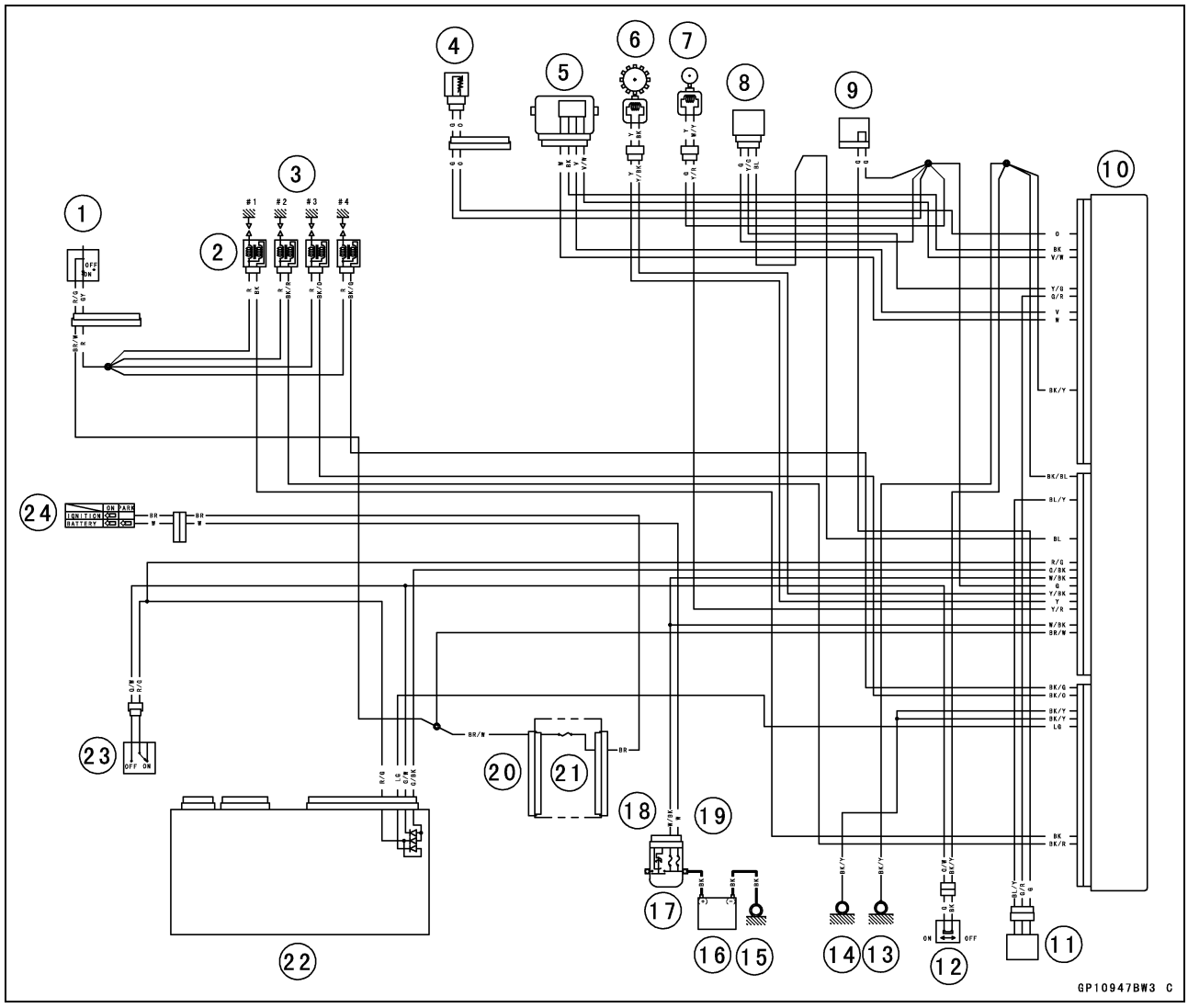

1. Engine Start/Stop Switch (Engine Stop)
2. Stick Coils
3. Spark Plugs
4. Water Temperature Sensor
5. Throttle Position Sensor
6. Crankshaft Sensor
7. Camshaft Position Sensor
8. Vehicle-down Sensor
9. Joint Connector G
10. ECU
11. Gear Position Sensor
12. Side Stand Switch
13. Frame Ground (4)
14. Frame Ground (3)
15. Engine Ground
16. Battery 12 V 8.6 Ah
17. Starter Relay
18. ECU Fuse 15 A
19. Maine Fuse 30 A
20. Fuse Box (1)
21. Ignition Fuse 15 A
22. Relay Box
23. Starter Lockout Switch
24. Ignition Switch

Electric Starter System

Starter Motor Removal

- Drain the coolant (see Coolant Change in the Periodic Maintenance chapter).
- Remove:
  Air Cleaner Housing Cover (see Air Cleaner Housing Removal in the Fuel System (DFI) chapter)
  Water Hose Fitting Bolts [A]
  Water Hose Fitting [B] and Bracket [C]

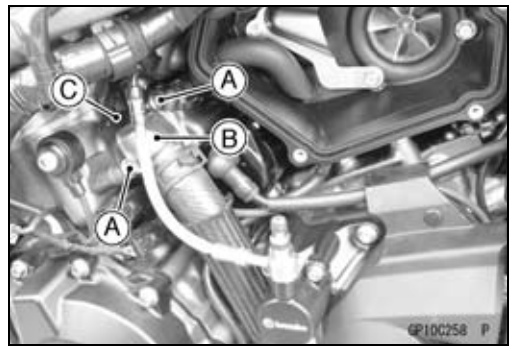

- Slide out the rubber cap [A].
- Remove:
  Starter Motor Cable Terminal Nut [B]
  Starter Motor Mounting Bolts [C]
  Starter Motor [D] and Bracket [E]

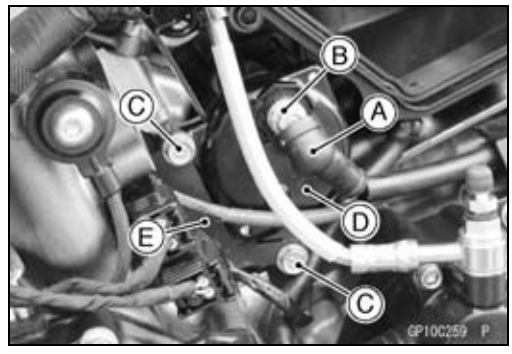

Starter Motor Installation

NOTICE

Do not tap the starter motor shaft or body. Tapping the shaft or body could damage the motor.

- Clean the starter motor installing hole [A].
- Clean the starter motor legs [B] and crankcase [C] where the starter motor is ground.

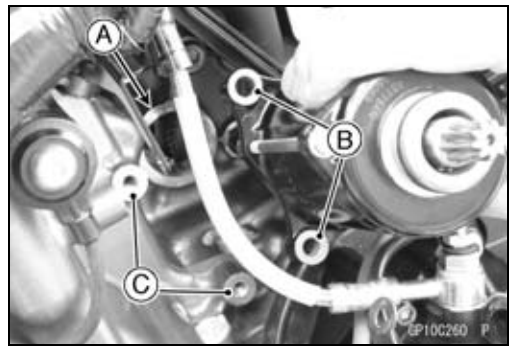

- Replace the O-ring [A] with a new one.
- Apply grease to the new O-ring.
- Install the bracket.
- Tighten:

Torque - Starter Motor Mounting Bolts: 10 N·m (1.0 kgf·m, 89 in·lb)

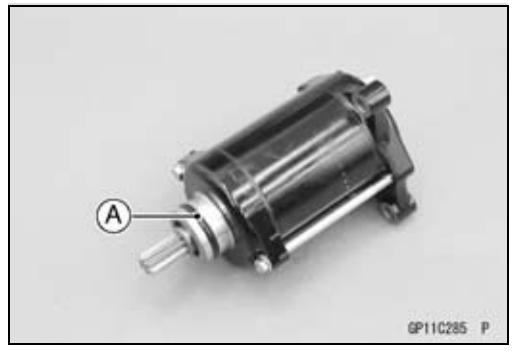

- Install the starter motor cable [A] as shown.
  ○The starter motor cable should be parallel with the straight line that links the starter motor mounting bolts.
- Apply grease to the starter motor cable terminal nut [B].
- Tighten:

Torque - Starter Motor Cable Terminal Nut: 6.0 N·m (0.61 kgf·m, 53 in·lb)

- Slide back the rubber cap to the original position.
- Install the removed parts (see appropriate chapters).

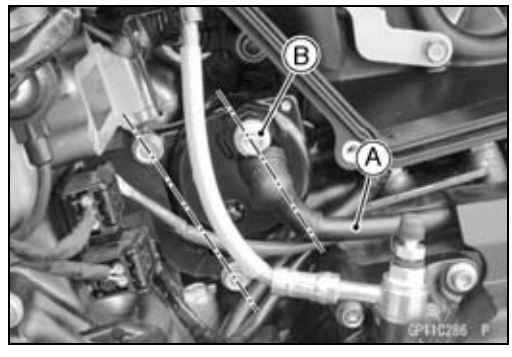

Electric Starter System

Starter Motor Disassembly

- Remove the starter motor (see Starter Motor Removal).
- Take off the starter motor through bolts [A] and remove the both end covers [B].

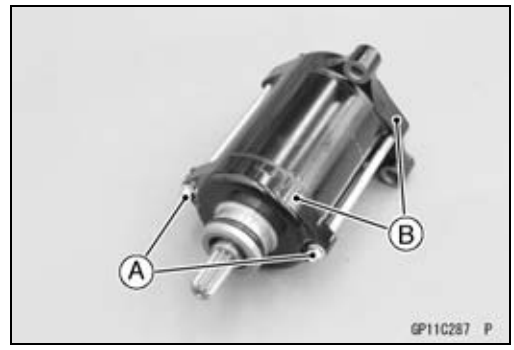

- Pull out the armature [A] out of the yoke [B].

NOTE

○*Do not remove the circlip [C] from the shaft.*

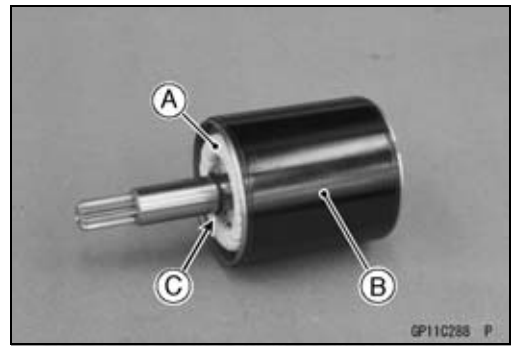

- Remove:
  Starter Motor Terminal Locknut [A]
  Washer [B]
  Collar [C]

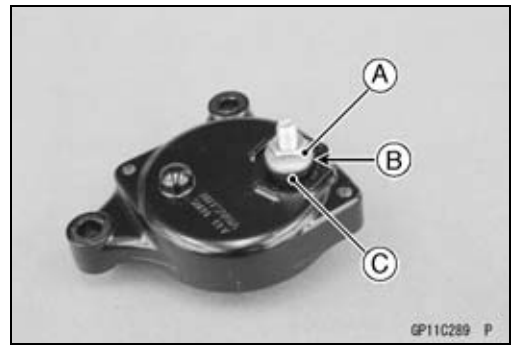

- Pull out the brushes from the brush holder [A].
- Remove:
  Brush Springs [B]
  Starter Motor Terminal [C] and O-ring
  Positive Brush Assy [D]
  Screw [E]
  Negative Brush Assy [F]
  Brush Holder

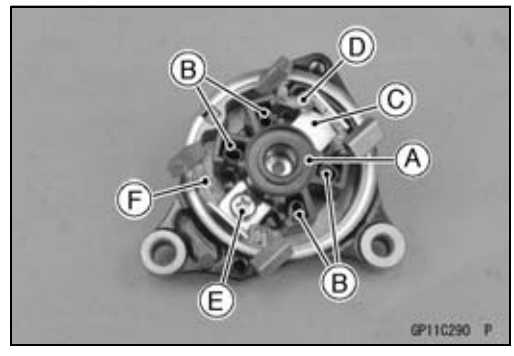

Starter Motor Assembly

- Install the positive brush assy [A] and the starter motor terminal [B] as shown.
- Replace the O-ring [C] with a new one, and install it.

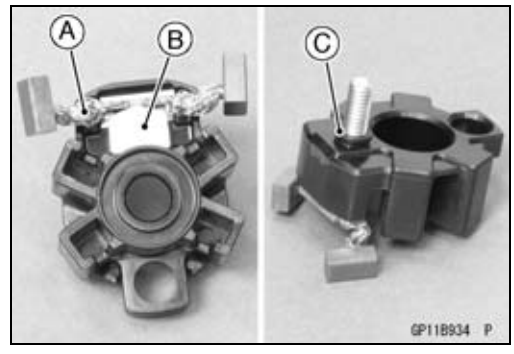

Electric Starter System

● Install:
Brush Springs [A]
Negative Brush Assy [B]
○Turn the stopper side [C] to inside.
● Tighten:

Torque - Brush Holder Screw [D]: 3.8 N·m (0.39 kgf·m, 34 in·lb)

● Install the brushes onto the brush springs.

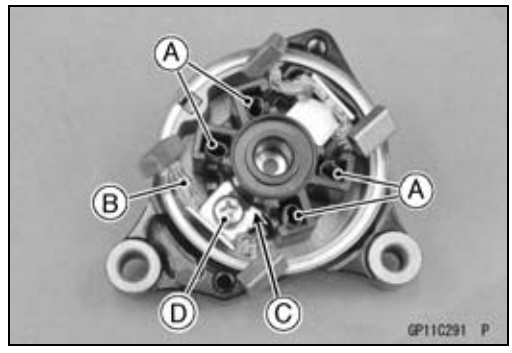

● Install the following parts to the starter motor terminal [A].
Collar [B]
Washer [C]
Starter Motor Terminal Locknut [D]
○Turn the flange of the collar to the locknut as shown.
● Tighten:

Torque - Starter Motor Terminal Locknut: 11 N·m (1.1 kgf·m, 97 in·lb)

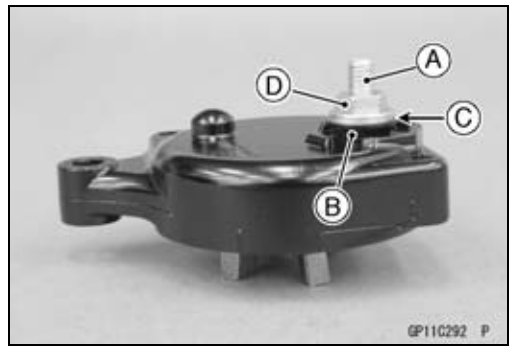

● Apply thin coat of grease to the oil seal [A].

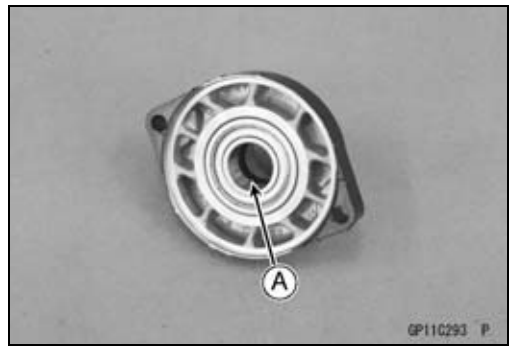

● Replace the O-rings [A] with new ones.
● Insert the armature [B] so that commutator side [C] faces hollow side [D] of the yoke [E].

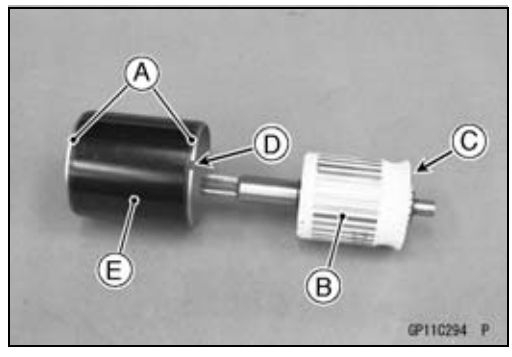

● Assemble the yoke [A] and the end cover [B] as shown.
Mark [C]
Mark [D]

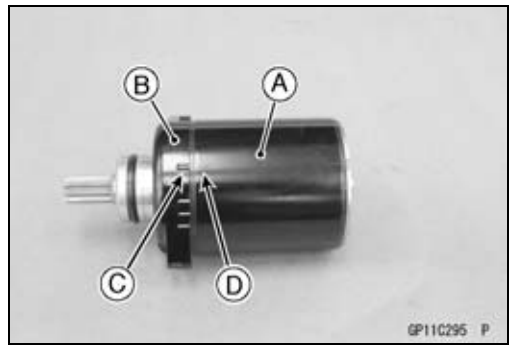

Electric Starter System

● Assembly the yoke [A] and the end cover [B] so that the hollow [C] of the yoke fits the projection [D] of the end cover.

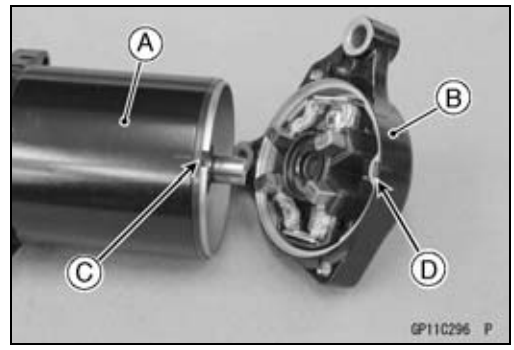

● Tighten:

Torque - Starter Motor Through Bolts [A]: 5.0 N·m (0.51 kgf·m, 44 in·lb)



Brush Inspection

● Measure the length of each brush [A].

★If any is worn down to the service limit, replace the brush assy.

Starter Motor Brush Length [B]
Standard: 12.0 mm (0.47 in.)
Service Limit: 6.5 mm (0.26 in.)

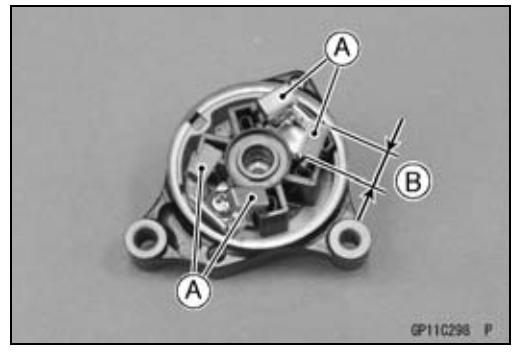

Commutator Cleaning and Inspection

● Clean the metallic dust off the between commutator segments [A].

NOTE

○*Do not use emery or sand paper on the commutator.*

● Check the commutator for damage or abnormal wear.

★Replace the starter motor with a new one if there is any damage or wear.

● Visually inspect the commutator segments for discoloration.

★Replace the starter motor with a new one if discoloration is noticed.

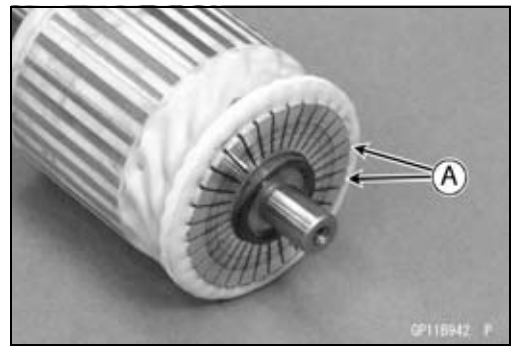

Electric Starter System

Armature Inspection

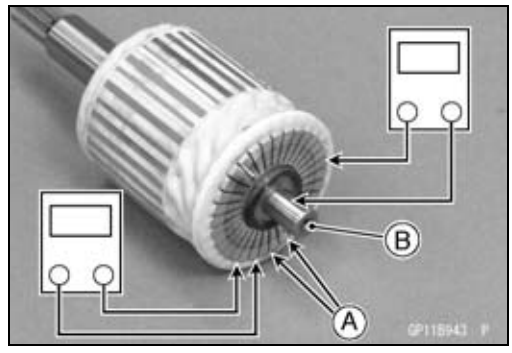

- Measure the resistance between any two commutator segments [A].

★If there is a high resistance or no reading (∞) between any two segments, a winding is open and the starter motor must be replaced.

- Measure the resistance between the segments and the shaft [B].

★If there is any reading at all, the armature has a short and the starter motor must be replaced.

NOTE

○*Even if the foregoing checks show the armature to be good, it may be defective in some manner not readily detectable with the tester. If all other starter motor and starter motor circuit components check good, but the starter motor still does not turn over or only turns over weakly, replace the starter motor with a new one.*

Brush Lead Inspection

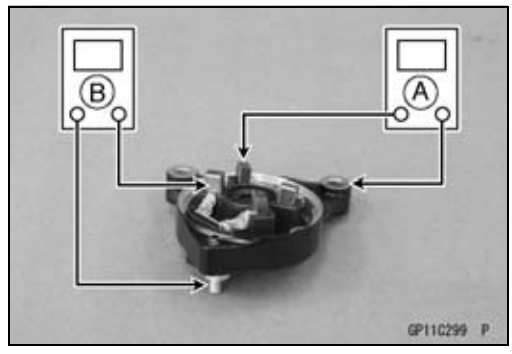

- Measure the resistance as shown.
  End Cover and Negative Brushes [A]
  Terminal Bolt and Positive Brushes [B]

★If there is not close to zero ohms, the brush lead has an open. Replace the brush plate assy.

Left-hand End Cover Inspection

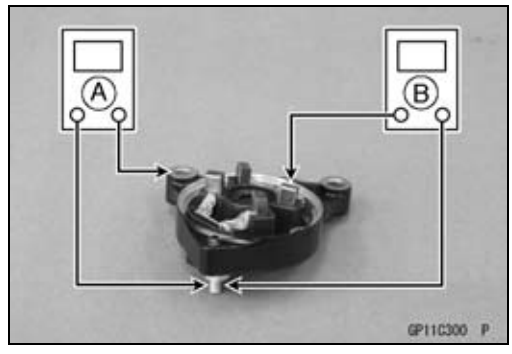

- Measure the resistance as shown.
  Terminal Bolt and End Cover [A]
  Terminal Bolt and Negative Brushes [B]

★If there is any reading, the brush assy and/or terminal bolt assy have a short. Replace the brush plate assy.

Starter Relay Inspection

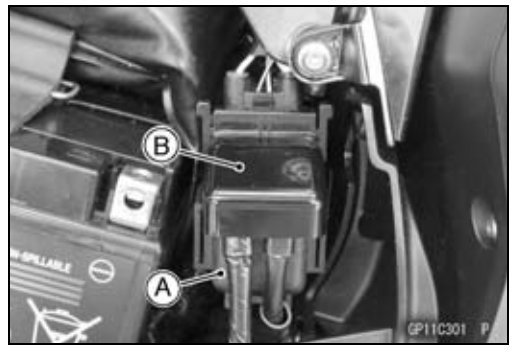

- Remove:
  Battery Negative (–) Cable (see Battery Removal)
- Take the starter relay [A] off the rear fender.
- Remove:
  Starter Relay Cover [B]

Electric Starter System

- Disconnect:
  Connector [A]
  Cable Terminals [B]
- Remove:
  Starter Relay [C]

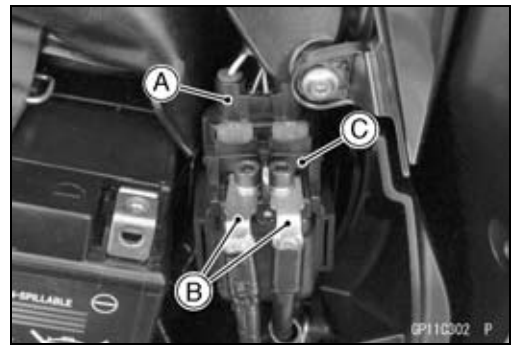

- Connect a tester [A] and 12 V battery [B] to the starter relay [C] as shown.

★If the relay does not work as specified, the relay is defective. Replace the relay.

Testing Relay

Criteria: When battery is connected → 0 Ω

When battery is disconnected → ∞ Ω

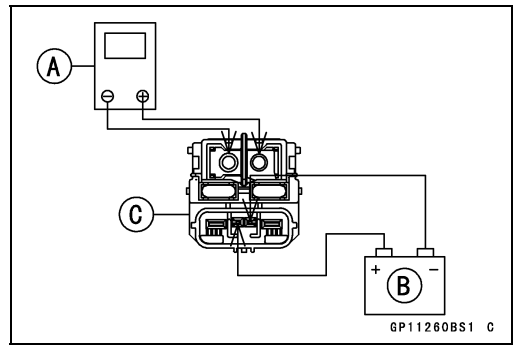

Electric Starter System

Electric Starter Circuit

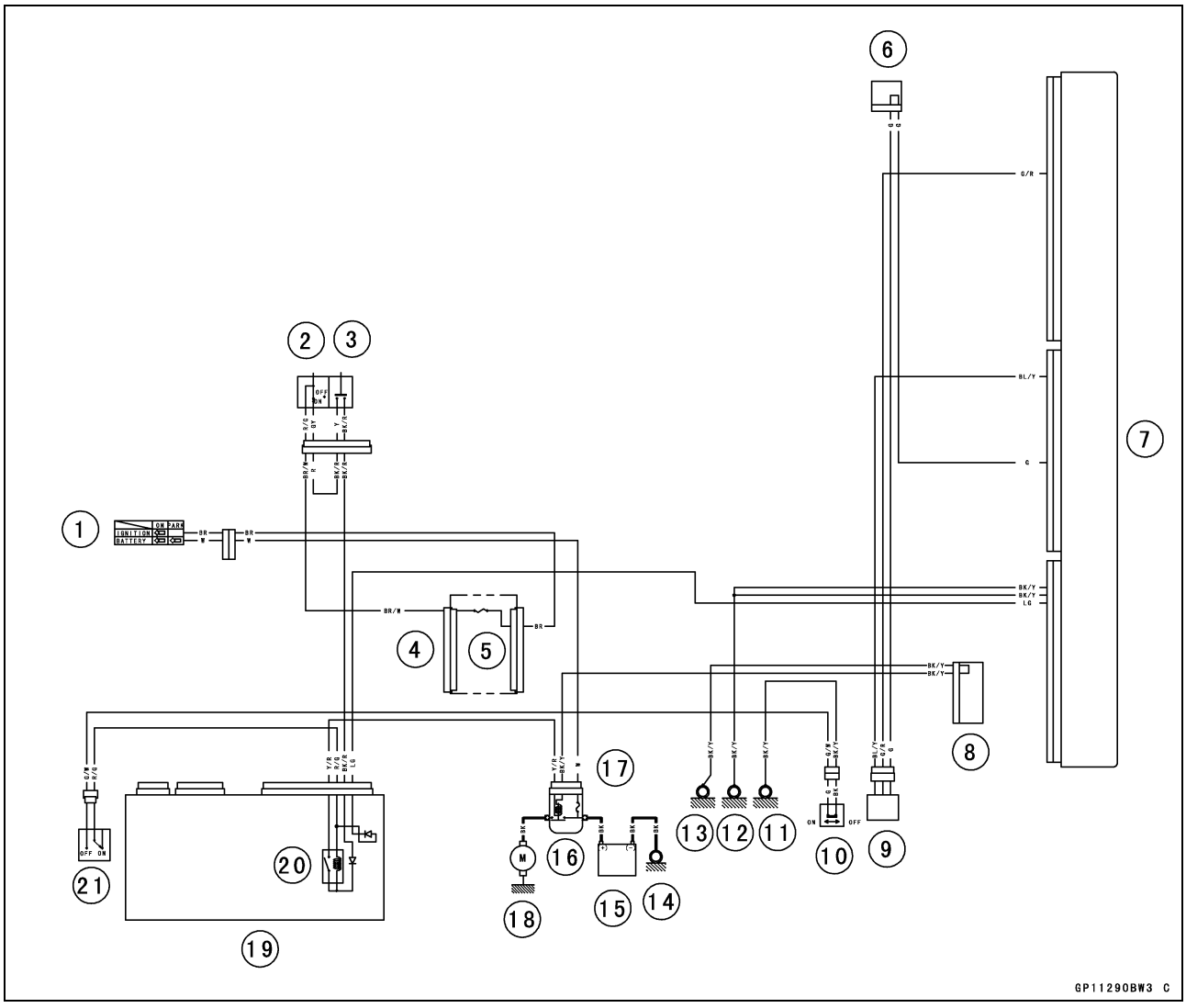

1. Ignition Switch
2. Engine Start/Stop Switch (Engine Stop)
3. Engine Start/Stop Switch (Engine Start)
4. Fuse Box (1)
5. Ignition Fuse 15 A
6. Joint Connector G
7. ECU
8. Joint Connector E
9. Gear Position Sensor
10. Side Stand Switch
11. Frame Ground (4)
12. Frame Ground (3)
13. Frame Ground (2)
14. Engine Ground
15. Battery 12 V 8.6 Ah
16. Starter Relay
17. Maine Fuse 30 A
18. Starter Motor
19. Relay Box
20. Starter Circuit Relay
21. Starter Lockout Switch

Lighting System

This motorcycle adopt the daylight system and have a headlight relay in the relay box. The headlight does not go on when the ignition switch and the engine start/stop switch are first turned on. The headlight comes on after the engine start/stop switch is released and stays on until the ignition switch is turned off. The headlight will go out momentarily whenever the engine start/stop switch is slided and come back on when the engine start/stop switch is released.

Headlight Beam Horizontal Adjustment

- Refer to the Headlight Aiming Inspection in the Periodic Maintenance chapter.

Headlight Beam Vertical Adjustment

- Refer to the Headlight Aiming Inspection in the Periodic Maintenance chapter.

Headlight (LED) Assembly Removal/Installation

- Refer to the Upper Fairing Disassembly/Assembly in the Frame chapter.

Headlight (LED) Assembly Disassembly

- Remove:
  Headlight Cover Screws [A]
  Headlight Cover [B]

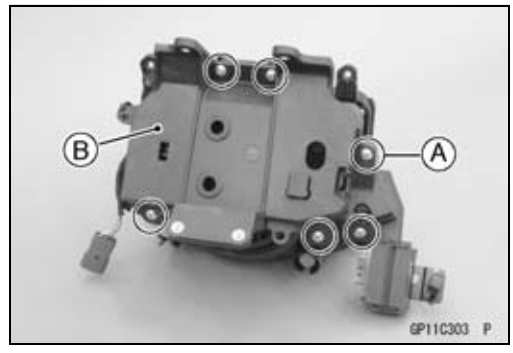

Headlight (LED) Assembly Assembly

- When installing the grommet [A], position the slit [B] to upward.
- Install:
  Headlight Cover
- Tighten:

Torque - Headlight Cover Screws: 1.2 N·m (0.12 kgf·m, 11 in·lb)

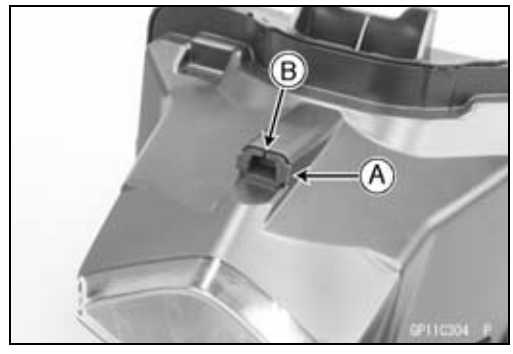

City Light (LED) Removal/Installation

- Refer to Upper Fairing Disassembly/Assembly in the Frame chapter.

Lighting System

Tail/Brake Light (LED) Removal

- Remove:
  Seat Cover (see Seat Cover Removal in the Frame chapter)
- Disconnect the tail/brake light lead connector [A].

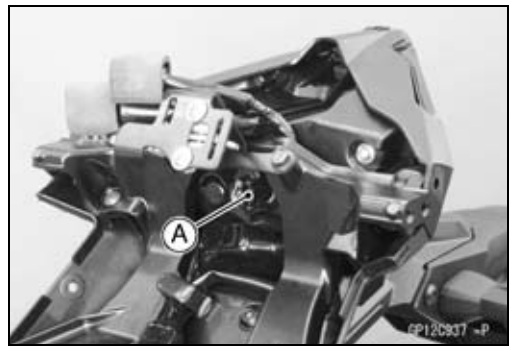

- Remove the quick rivets [A].
- Pull up on the rear of tail/brake light (LED) [B], and remove it.

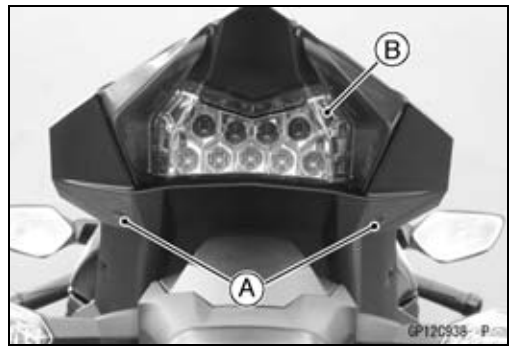

- Remove the screws [A].
- Remove the tail/brake light (LED) [B] from the tail/brake light cover [C].

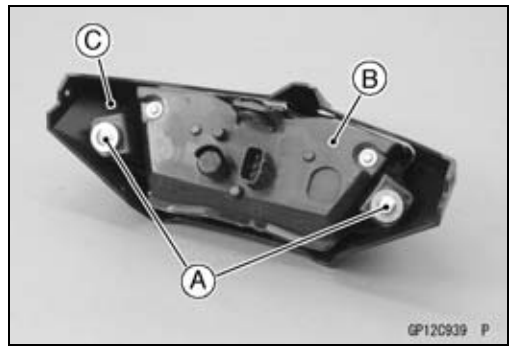

Tail/Brake Light (LED) Installation

- Check that the grommet [A] and damper [B] are in place on the tail/brake light (LED) [C] and cover [D].
- Install the tail/brake light (LED) to the cover.

○Insert the projections [E] into the holes [F] of the grommets.

○Insert the damper into the holes [G].

- Tighten the screws.

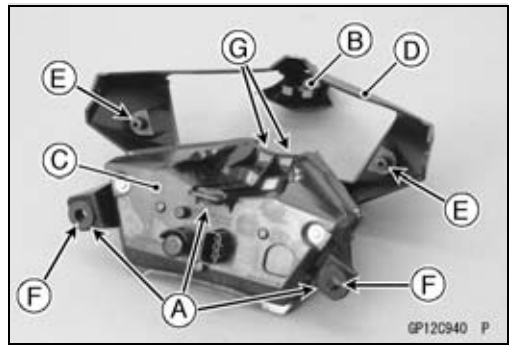

- Install the tail/brake light (LED) to the frame.

○Insert the projection [A] into the hole [B].

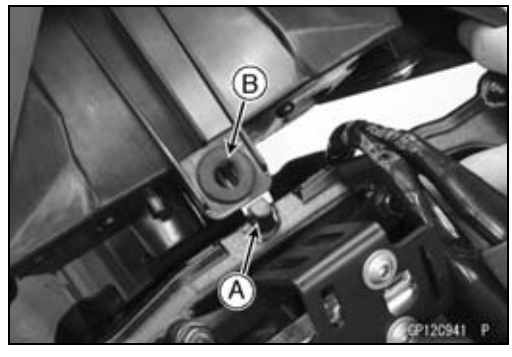

Lighting System

- Fit the tabs [A] of the cover to the slots [B].
- Install the quick rivets.
- Run the lead correctly (see Cable, Wire, and Hose Routing section in the Appendix chapter).
- Install the removed parts (see appropriate chapters).

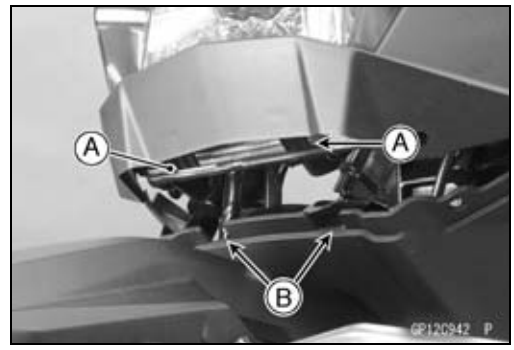

License Plate Light Bulb Replacement

- Remove:
  License Plate Light Cover Screws [A]
  License Plate Light Cover [B] and Lens

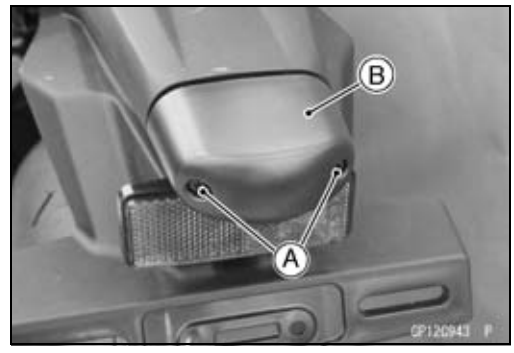

- Pull out the bulb [A] straight from the socket.

NOTICE
Do not turn the bulb. Pull the bulb out to prevent damage to the bulb. Do not use bulb rated for greater wattage then the specified valve.



- Replace the bulb with a new one.
- Insert the new bulb into the socket.
- Install the license plate light cover.
- Tighten the license plate light cover screws.

Lighting System

Headlight/Tail Light Circuit

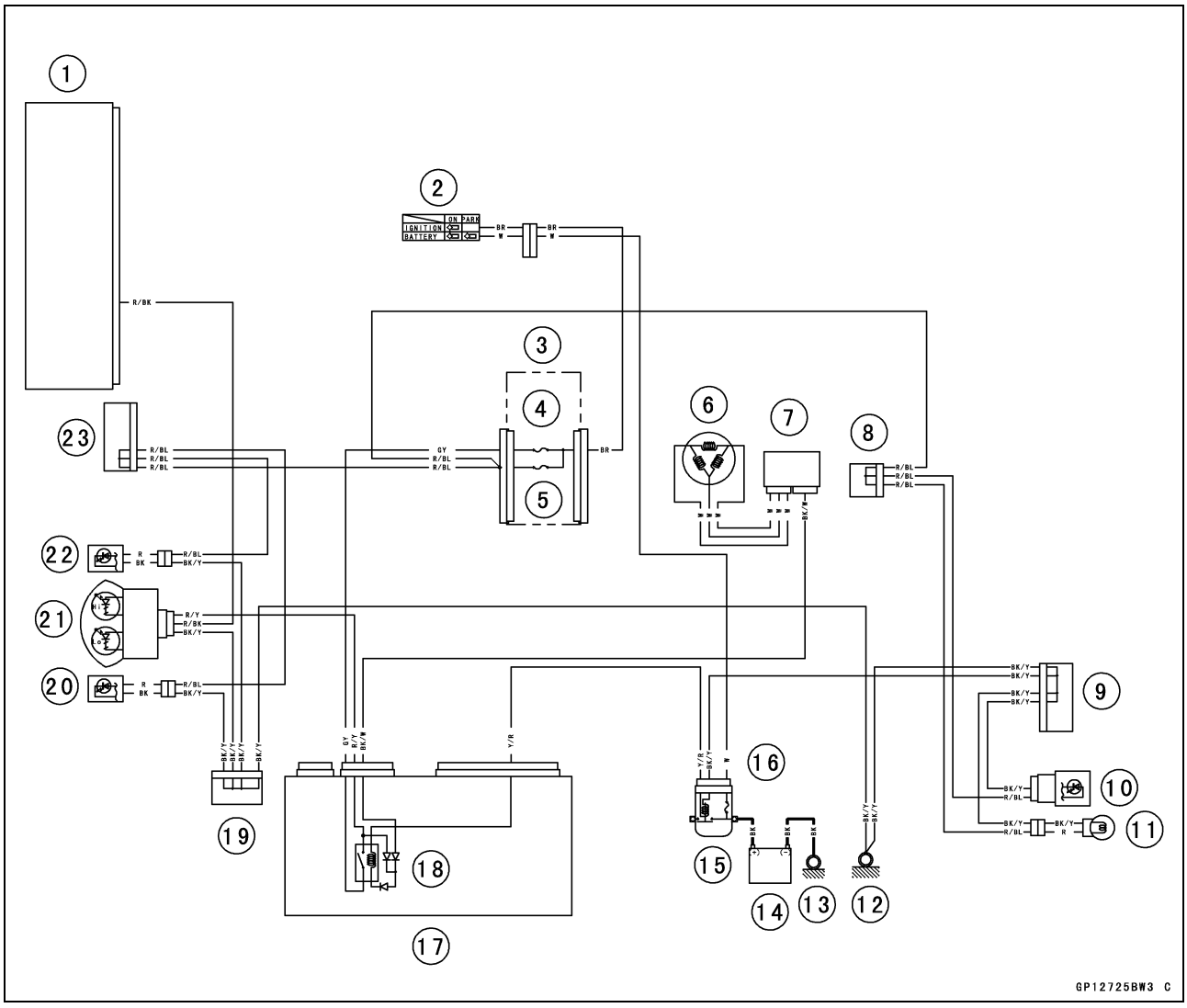

1. Meter Unit
2. Ignition Switch
3. Fuse Box (1)
4. Headlight Relay Fuse 10 A
5. Brake Light/Horn Fuse 10 A
6. Alternator
7. Regulator/Rectifier
8. Joint Connector C
9. Joint Connector E
10. Tail/Brake Light (LED)
11. License Plate Light 12 V 5 W
12. Frame Ground (2)
13. Engine Ground
14. Battery 12 V 8.6 Ah
15. Starter Relay
16. Maine Fuse 30 A
17. Relay Box
18. Headlight Circuit Relay
19. Joint Connector J
20. Left City Light (LED)
21. Headlight (LED)
22. Right City Light (LED)
23. Joint Connector B

Turn Signal Light (LED) Replacement

- Refer to the Rear View Mirror Removal/Installation and Flap Disassembly/Assembly in the Frame chapter.

Lighting System

Turn Signal Light Circuit

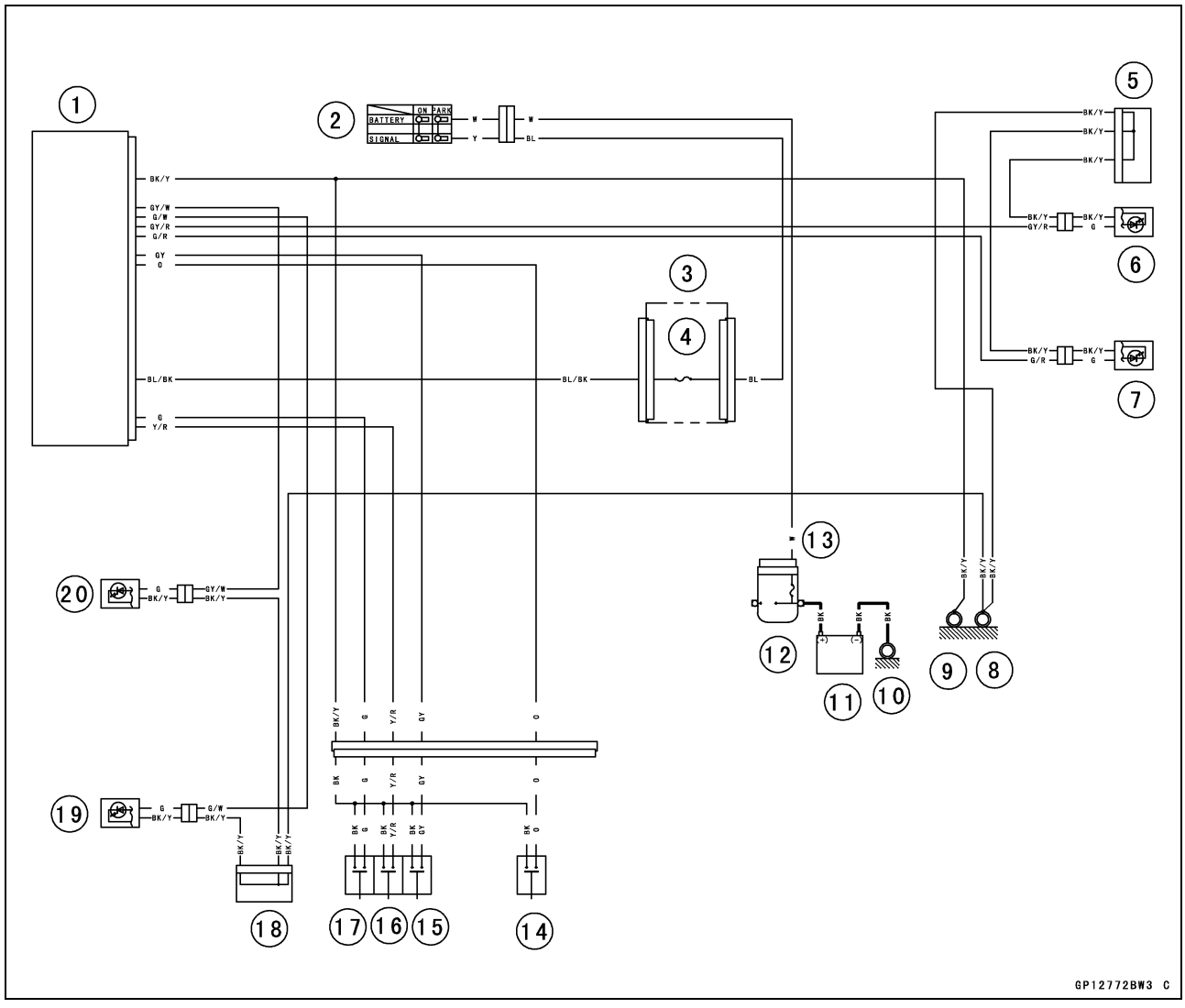

1. Meter Unit
2. Ignition Switch
3. Fuse Box (1)
4. Turn Signal Relay Fuse 10 A
5. Joint Connector E
6. Rear Right Turn Signal Light (LED)
7. Rear Left Turn Signal Light (LED)
8. Frame Ground (2)
9. Frame Ground (1)
10. Engine Ground
11. Battery 12 V 8.6 Ah
12. Starter Relay
13. Main Fuse 30 A
14. Hazard Switch
15. Right Turn Signal Switch
16. Turn Signal Cancel Switch
17. Left Turn Signal Switch
18. Joint Connector J
19. Front Left Turn Signal Light (LED)
20. Front Right Turn Signal Light (LED)

Air Switching Valve

Air Switching Valve Operation Test

- Refer to the Air Suction System Damage Inspection in the Periodic Maintenance chapter.

Air Switching Valve Unit Test

- Remove the air switching valve (see Air Switching Valve Removal in the Engine Top End chapter).
- Connect a tester [A] to the air switching valve terminals as shown.

Air Switching Valve Resistance
Standard: 20 ~ 24 Ω @20°C (68°F)

★If the resistance reading is out of the specified value, replace it with a new one.

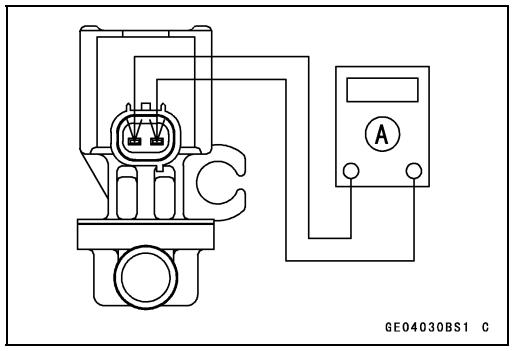

- Connect the 12 V battery [A] to the air switching valve terminals as shown.

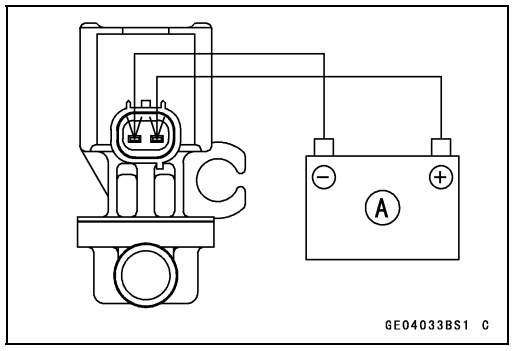

- Blow the air to the intake air duct [A], and make sure does not flow the blown air from the outlet air ducts [B].

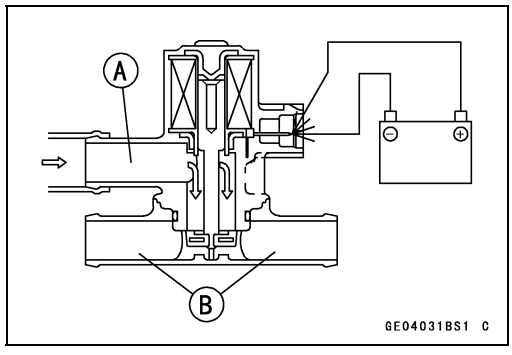

- Disconnect the 12 V battery.
- Blow the air to the intake air duct [A] again, and make sure flow the blown air from the outlet air duct [B].

★If the air switching valve does not operate as described, replace it with a new one.

NOTE

○*To check air flow through the air switching valve, just blow through the air switching valve hose (intake side) [C].*

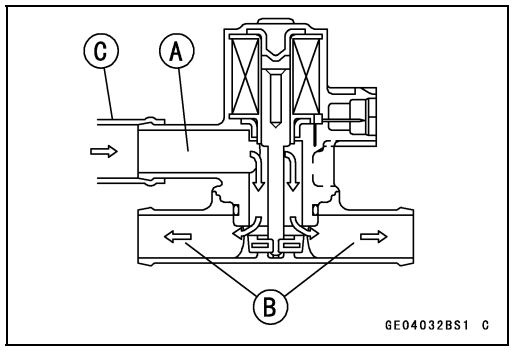

Air Switching Valve

Air Switching Valve Circuit

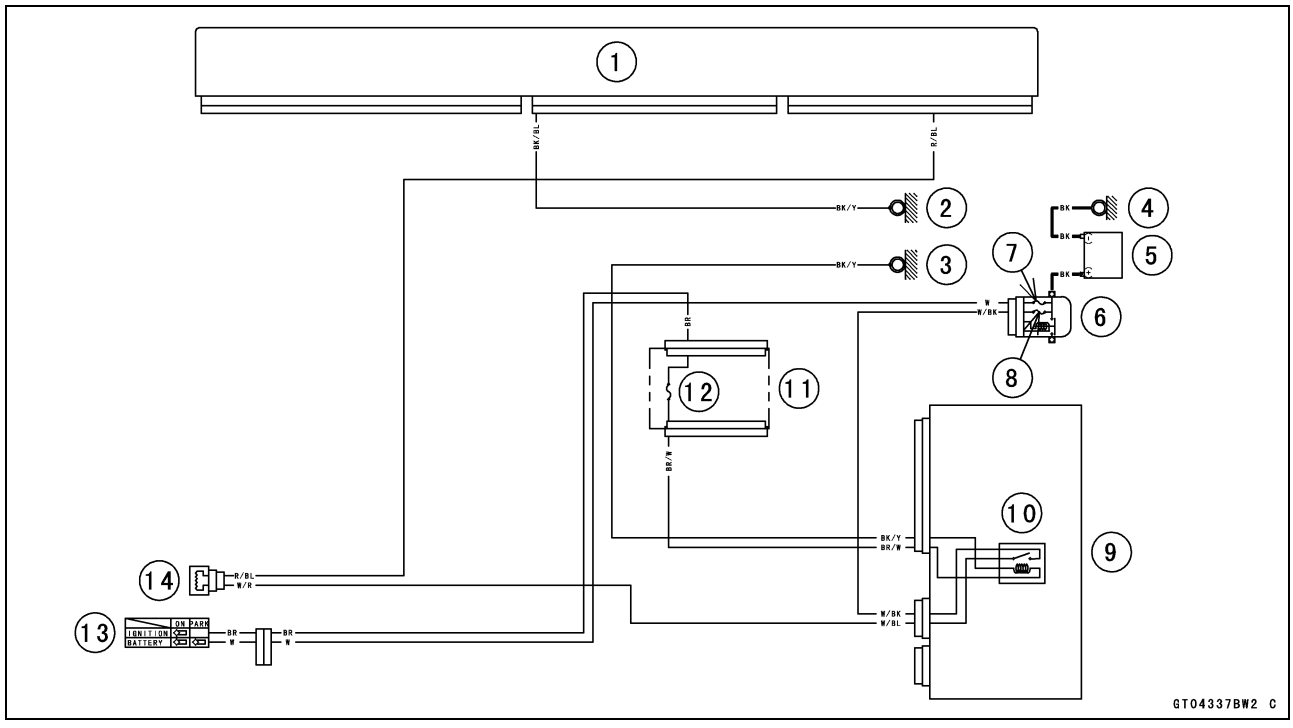

1. ECU
2. Frame Ground (4)
3. Frame Ground (2)
4. Engine Ground
5. Battery 12 V 8.6 Ah
6. Starter Relay
7. Main Fuse 30 A
8. ECU Fuse 15 A
9. Relay Box
10. ECU Main Relay
11. Fuse Box (1)
12. Ignition Fuse 15 A
13. Ignition Switch
14. Air Switching Valve

Radiator Fan System

Fan Motor Inspection

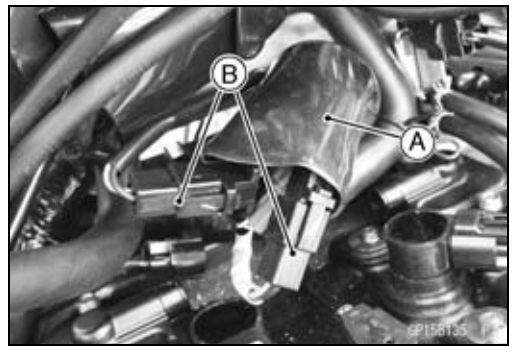

- Remove the air switching valve (see Air Switching Valve Removal in the Engine Top End chapter).
- Slide the dust cover [A].
- Disconnect the connectors [B].
- Using an auxiliary leads, supply battery power to the fan motor.

★If the fan does not rotate, the fan motor is defective and must be replaced.

Radiator Fan System

Radiator Fan Circuit

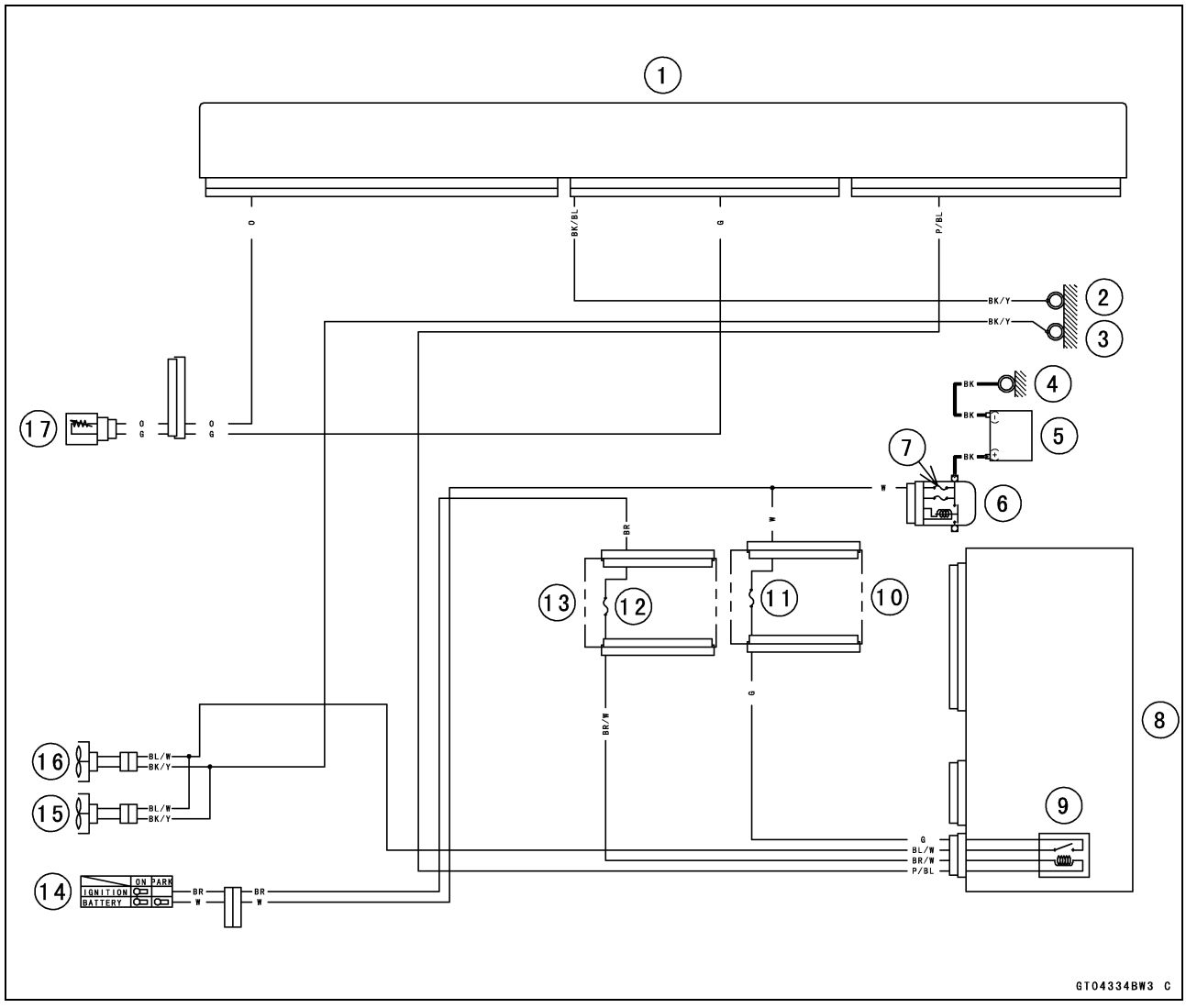

1. ECU
2. Frame Ground (4)
3. Frame Ground (3)
4. Engine Ground
5. Battery 12 V 8.6 Ah
6. Starter Relay
7. Main Fuse 30 A
8. Relay Box
9. Radiator Fan Relay
10. Fuse Box (2)
11. Fan Fuse 15 A
12. Ignition Fuse 15 A
13. Fuse Box (1)
14. Ignition Switch
15. Fan Motor (2)
16. Fan Motor (1)
17. Water Temperature Sensor

Meter, Gauge, Indicator Unit

Meter Unit Removal

- Remove:
  Upper Fairing (see Upper Fairing Removal in the Frame chapter)
  Bolts [A]
  Bracket [B]

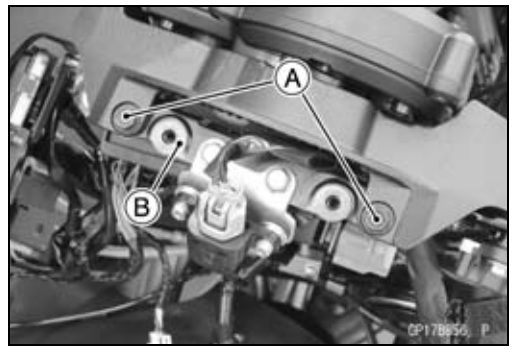

- Remove:
  Relay Box [A] with Rubber Protector
  Electronic Steering Damper ECU [B] with Rubber Protector

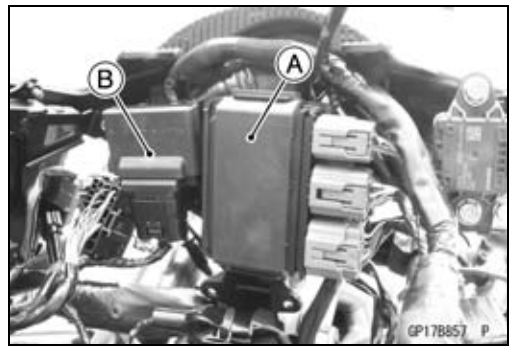

- Remove:
  Bolts [A]
  Bracket [B]

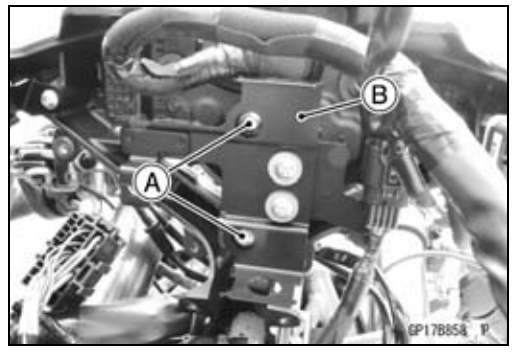

- Slide the dust cover [A], and disconnect the meter connector [B].
- Remove:
  Meter Mounting Screws [C]
  Meter Unit [D]

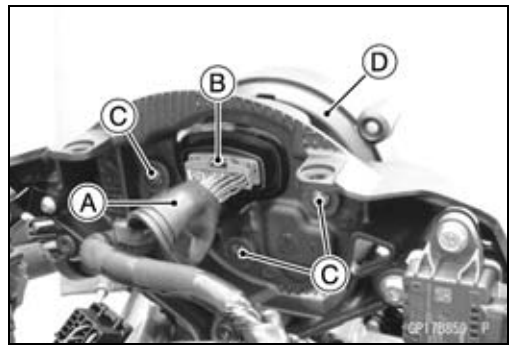

Meter Unit Installation

- Installation is the reverse of removal.

Torque - Meter Unit Mounting Screws: 1.5 N·m (0.15 kgf·m, 13 in·lb)

- Run the leads correctly (see Cable, Wire, and Hose Routing section in the Appendix chapter).

Meter, Gauge, Indicator Unit

Meter Operation Inspection

Check 1-1: Switching Inspection

● Turn the ignition switch on and check the following.

Inspection of Short Press

● By pushing the upper button [A] or lower button [B] each time, check that the multifunction display [C] changes as shown.

Warning Messages [D]

○This display is ordinary indication.

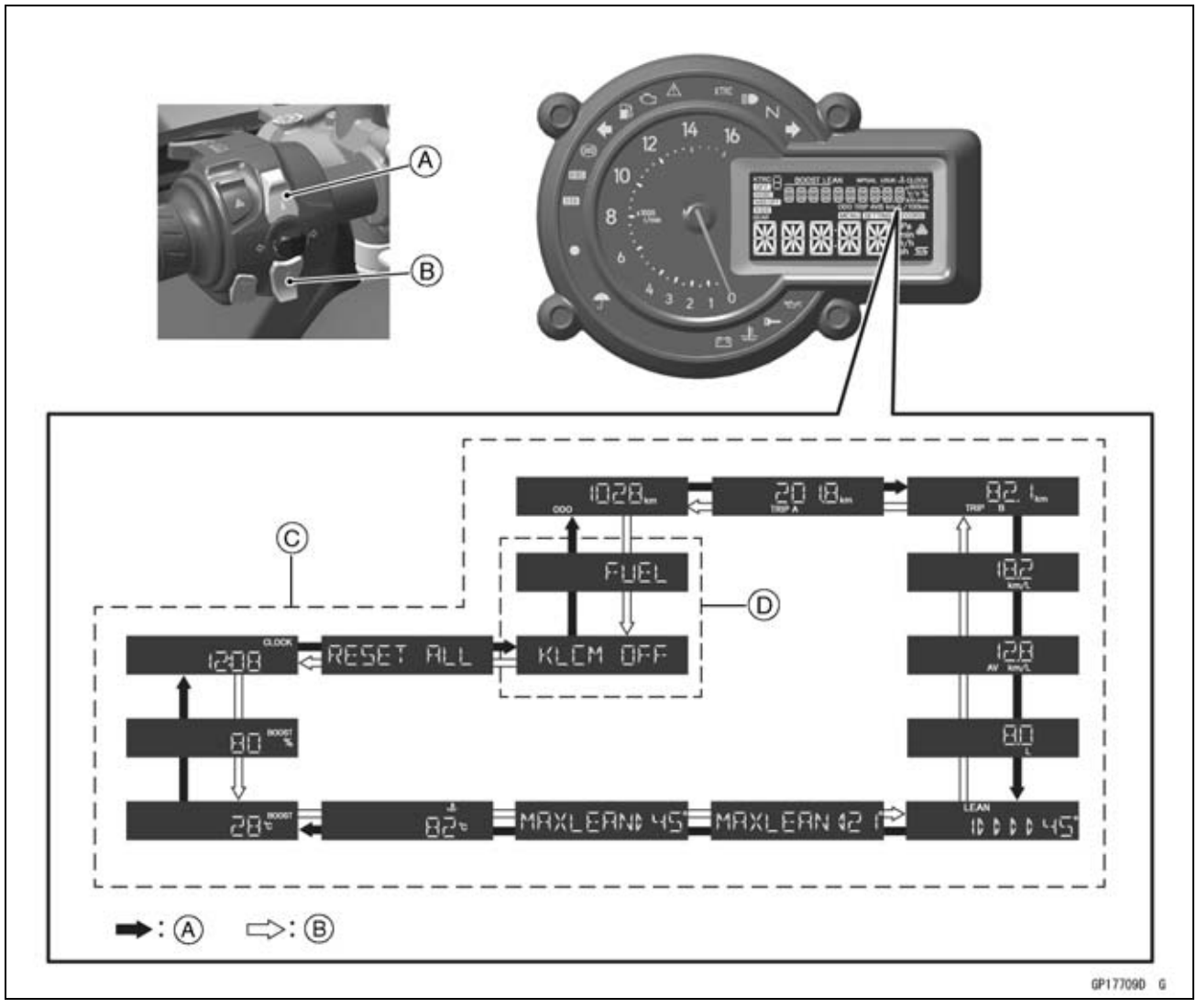

★If the meter does not work, check the left switch housing and the wiring for continuity (see Meter Unit Circuit).

★If the left switch housing and the wiring are good, replace the meter unit.

Meter, Gauge, Indicator Unit

- By pushing the mode button [A] each time, check that the KTRC mode display changes as shown.

★If the meter does not work, check the right switch housing and the wiring for continuity (see Meter Unit Circuit).

★If the right switch housing and the wiring are good, replace the meter unit.

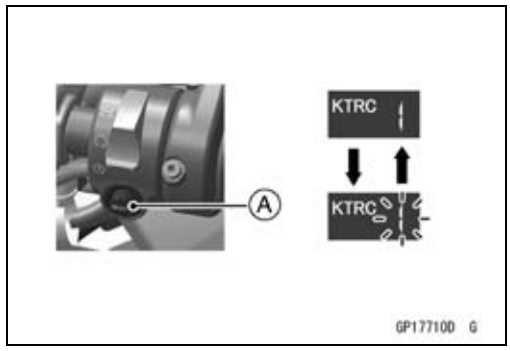

Inspection of Long Press

- By continue to push the mode button [A], check that the multifunction display [B] as shown.

Setting Mode [C]

★If the meter does not work, check the right switch housing and the wiring for continuity (see Meter Unit Circuit).

★If the right switch housing and the wiring are good, replace the meter unit.

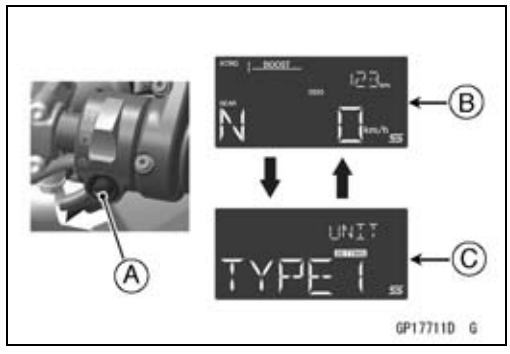

- Change the multifunction display to the shift-up engine speed setting display.
- By continue to push the upper button [A] or lower button [B], check that the moving of the tachometer needle continuously as shown.

★If the meter does not work, check the left switch housing and the wiring for continuity (see Meter Unit Circuit).

★If the left switch housing and the wiring are good, replace the meter unit.

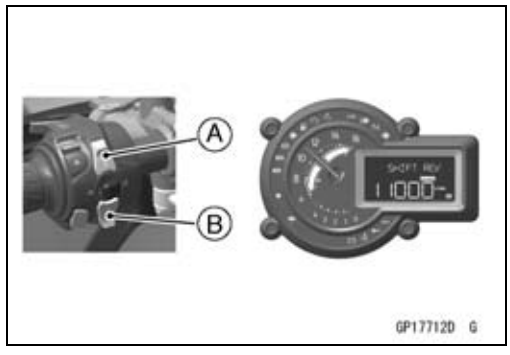

Inspection of Simultaneous Press

- Change the multifunction display to the odometer.
- By continue to push the upper button [A] and the lower button [B] simultaneously, check that the multifunction display as shown.

Service Code [C]

○The service code does not display when the service code is not stored.

★If the meter does not work, check the left switch housing and the wiring for continuity (see Meter Unit Circuit).

★If the left switch housing and the wiring are good, replace the meter unit.

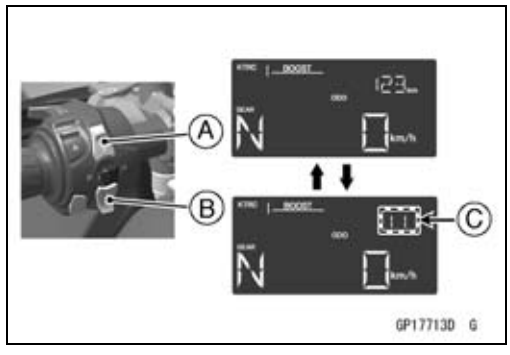

Meter, Gauge, Indicator Unit

Check 1-2: Gear Position Indicator Inspection

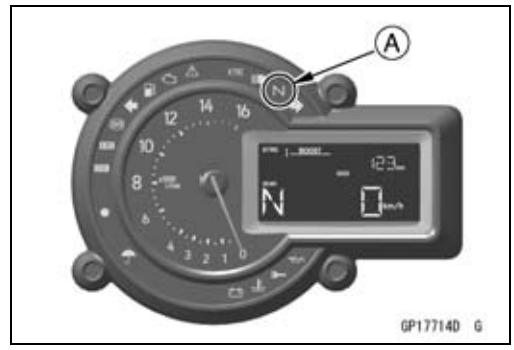

- Turn the ignition switch on.
- The green neutral indicator light (LED) [A] goes on when the transmission gear is neutral position.

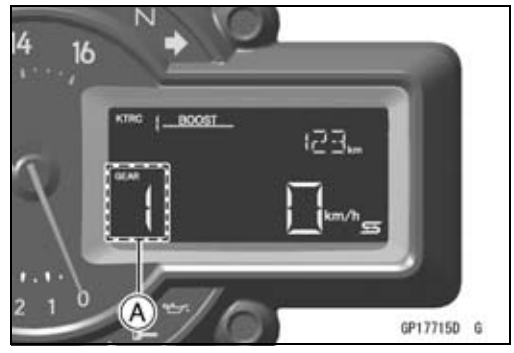

- Set the low gear position, and check that the display changes to 1 mark [A] and the green neutral indicator light (LED) goes off.
- Using the rear stand, raise the rear wheel off the ground.
- Rotate the rear wheel by hand or start the engine, and change the gear position.
- Check that the display corresponding to each gear position (1, 2, 3, 4, 5 or 6) appears.

★If the display function does not work, check the following parts.

Gear Position Switch (see Gear Position Switch Inspection)

Wiring (see Meter Unit Circuit)

★If the above parts are good, replace the meter unit and/or ECU.

Meter Operation Inspection

Check 2-1: Ambient Brightness Sensor Inspection

NOTE

○*This meter unit has the automatically engine speed indicator light brightness function by the sensor in addition to the manual brightness setting.*

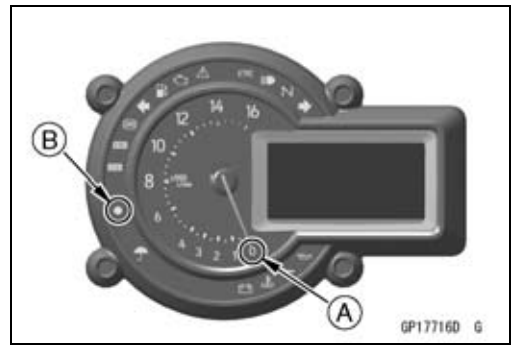

- Turn the ignition switch on.
- Check if the engine speed indicator light brightness [A] is changed by shining a light on the sensor [B] with the penlight.

★If the meter does not work, replace the meter unit.

Check 2-2: Red Battery Warning Indicator Light (LED) Inspection

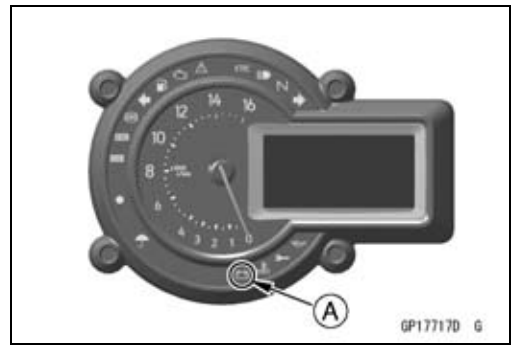

- When the battery condition is low voltage (10.8 ~ 11.2 V or less) or high voltage (15.5 ~ 16.5 V or more), the red battery warning indicator light (LED) [A] goes on.

★If the red battery warning indicator light (LED) goes on, inspect the charging voltage (see Charging Voltage Inspection).

★If the charging voltage is good, replace the meter unit.

Meter, Gauge, Indicator Unit

Check 2-3: Clock Inspection
- Turn the ignition switch on.
- Change the multifunction display to the clock.
- Record the time.
- Turn the ignition switch off, and then turn the ignition switch on after a few minutes.
- Check that the clock was counting time while turning the ignition switch off.

★If the meter does not work, replace the meter unit.

Meter Unit Inspection

- Remove the meter unit (see Meter Unit Removal).

[1] Horn Output
[2] Horn Output
[3] Horn Output
[4] Horn Output
[5] Ground (–)
[6] CAN Communication Line (High)
[7] CAN Communication Line (Low)
[8] Front Right Turn Signal Light Output
[9] Front Left Turn Signal Light Output
[10] Rear Right Turn Signal Light Output
[11] Rear Left Turn Signal Light Output
[12] Mode Button
[13] Green Right Turn Signal Light (LED) (–)
[14] Hazard
[15] Passing (–)
[16] Green Neutral Indicator Light (LED) (–)
[17] Ignition (+)
[18] Ignition (+)
[19] Ignition (+)
[20] Ignition (+)
[21] Battery (+)
[22] Ignition (+)
[23] High Beam Output
[24] Red Oil Pressure Warning Indicator Light (LED) (–)
[25] Fuel Level Sensor
[26] Parking
[27] Lower Button
[28] Upper Button
[29] Horn
[30] Green Left Turn Signal Light (LED) (–)
[31] Turn Signal Light Cancel
[32] Blue High Beam Indicator Light (LED) (–)

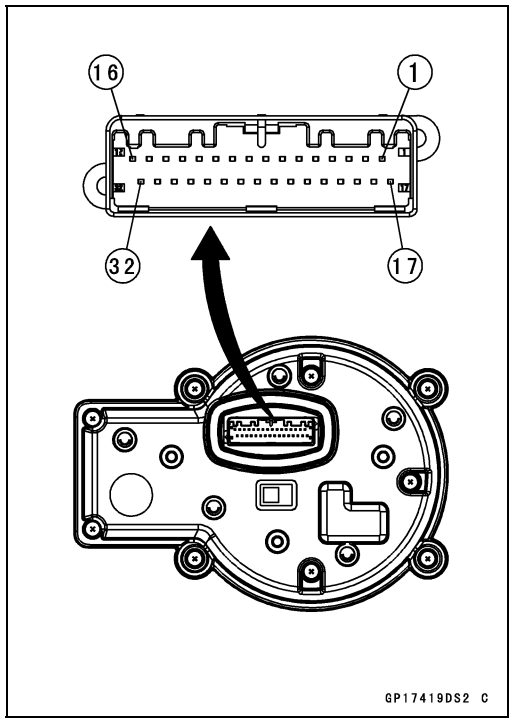

NOTICE
Do not drop the meter unit. Place the meter unit so that it faces upward. If the meter assembly is left upside down or sideways for a long time or dropped, it will malfunction. Do not short each terminal.

Meter, Gauge, Indicator Unit

Check 3-1: CAN Communication Line Resistance Inspection

● Connect a tester [A] to the terminal [6] and [7] in the meter unit.

CAN Communication Line Resistance (at Meter Connector)
Standard: 123 ~ 125 Ω

★If the tester reading is not specified, replace the meter unit.

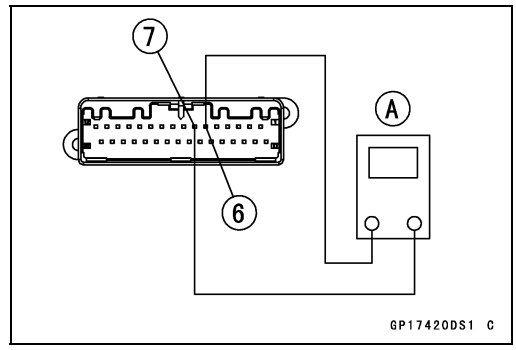

Check 3-2: Meter Unit Power Supply Check

● Using the auxiliary leads, the 12 V battery [A] to the meter unit connector as follows.

○Connect the battery positive (+) terminal to the terminal [17] ~ [22] [26].

○Connect the battery negative (-) terminal to the terminal [5].

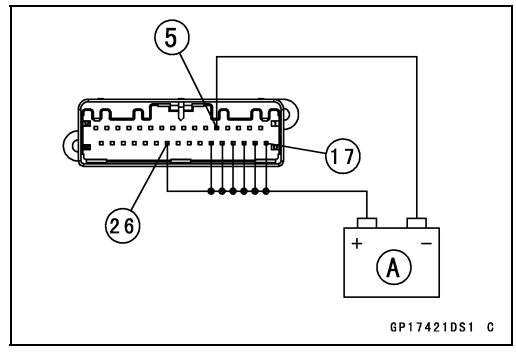

● Check the following items.

○The tachometer needle [A] momentarily points their last readings and back to the minimum position.

○The engine speed indicator light goes on synchronously with the movement of the tachometer needle.

○The indicator lights (LED) [B] and all LCD segments [C] go on for a few seconds.

★If the meter unit does not work, replace the meter unit.

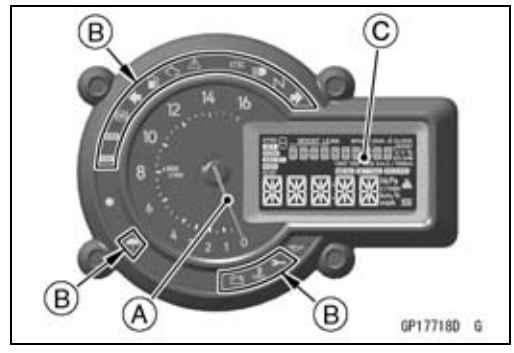

Check 3-3: Blue High Beam Indicator Light (LED) Inspection

● Connect the leads in the same circuit as Check 3-2.

● Connect the terminal [15] or [32] to the battery (–) terminal.

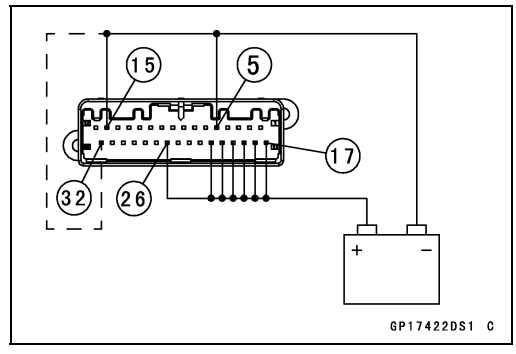

● Check that the blue high beam indicator light (LED) [A] goes on.

★If the indicator light does not go on, replace the meter unit.

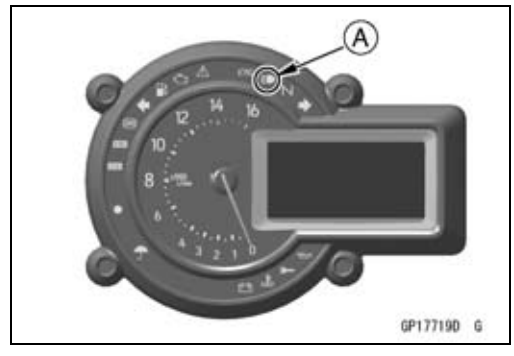

Meter, Gauge, Indicator Unit

Check 3-4: Green Turn Signal Indicator Lights (LED) Inspection

- Connect the leads in the same circuit as Check 3-2.
- Connect the terminal [13] to the battery (–) terminal.

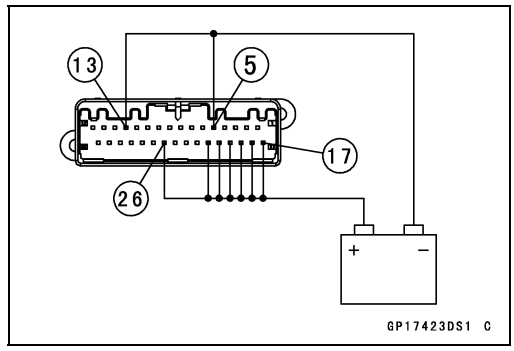

- Check that the green right turn signal indicator light (LED) [A] blinks.

★If the indicator light does not blink, replace the meter unit.

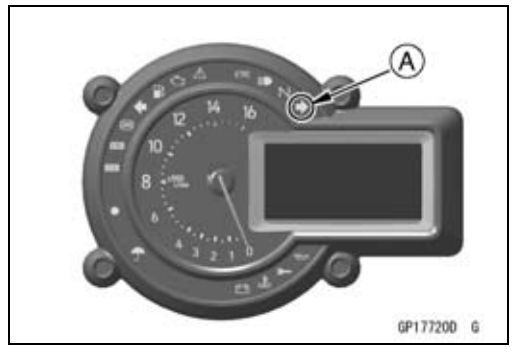

- Connect the leads in the same circuit as Check 3-2.
- Connect the terminal [30] to the battery (–) terminal.

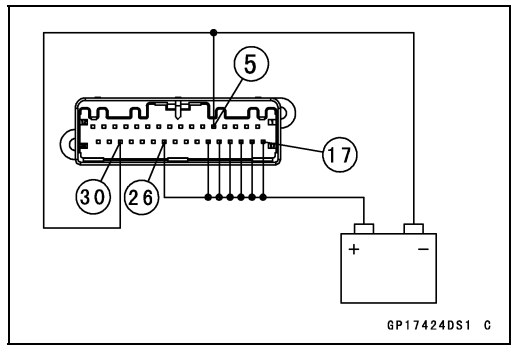

- Check that the green left turn signal indicator light (LED) [A] blinks.

★If the indicator light does not blink, replace the meter unit.

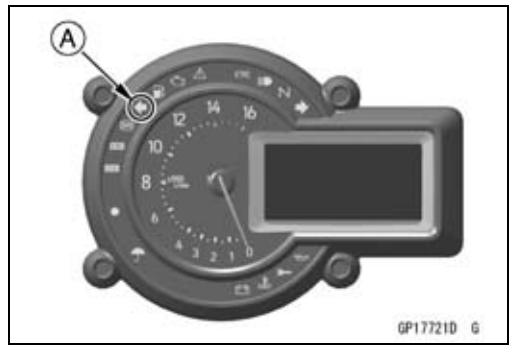

- Connect the leads in the same circuit as Check 3-2.
- Connect the terminal [14] to the battery (–) terminal.

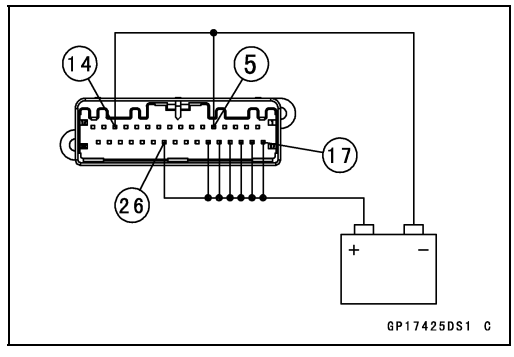

Meter, Gauge, Indicator Unit

● Check that the both green turn signal indicator lights (LED) [A] blink.
★If the indicator lights do not blink, replace the meter unit.

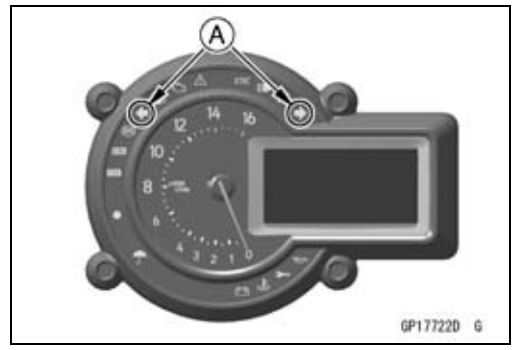

Check 3-5: Red Oil Pressure Warning Indicator Light (LED) Inspection
● Connect the leads in the same circuit as Check 3-2.
● Connect the terminal [24] to the battery (–) terminal.

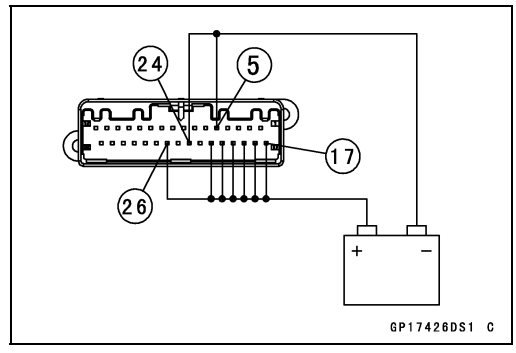

● Check that the red oil pressure warning indicator light (LED) [A] goes on.
★If the indicator light does not go on, replace the meter unit.

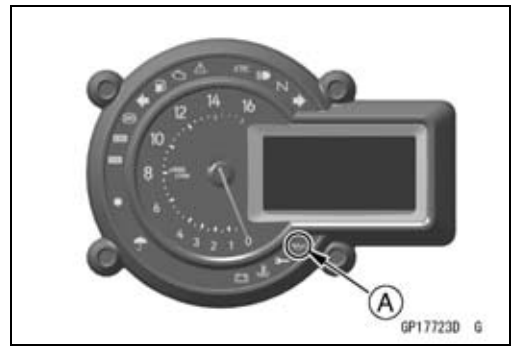

Check 3-6: Green Neutral Indicator Light (LED) Inspection
● Connect the leads in the same circuit as Check 3-2.
● Connect the terminal [16] to the battery (–) terminal.

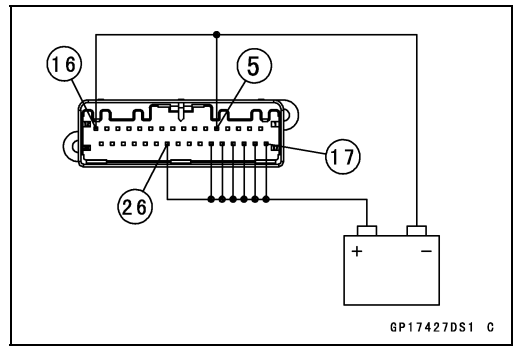

● Check that the green neutral indicator light (LED) [A] goes on.
★If the indicator light does not go on, replace the meter unit.

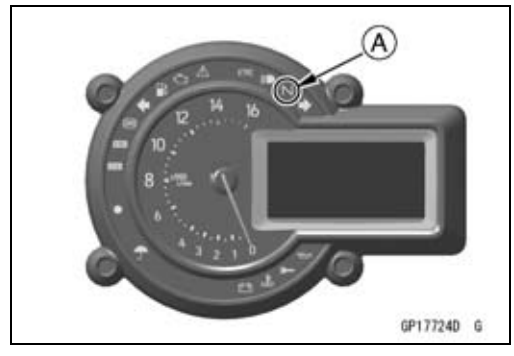

Meter, Gauge, Indicator Unit

Check 3-7: Amber Fuel Level Warning Indicator Light (LED) Inspection

- Connect the leads in the same circuit as Check 3-2.
- Connect the resistor (about 10 Ω) [A] between the terminal [5] and the terminal [25].

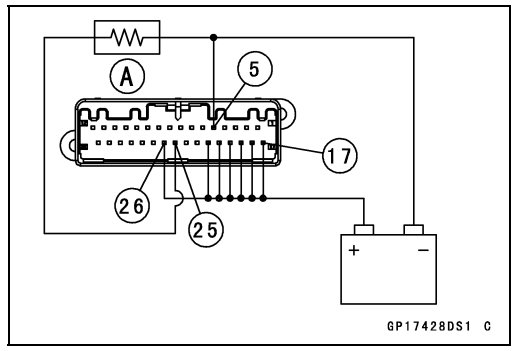

- Check that the amber fuel level warning indicator light (LED) [A] goes on.

★If the indicator light does not go on, replace the meter unit.

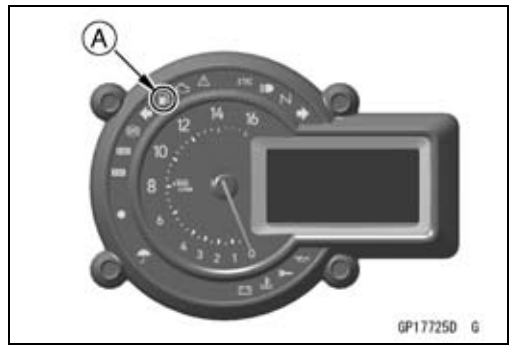

Check 3-8: Horn Function Wiring Inspection

- Connect the leads in the same circuit as Check 3-2.
- Connect the terminal [29] to the battery (–) terminal.
- Check that the terminals [1] ~ [4] show battery voltage.

★If the reading is not standard, replace the meter unit.

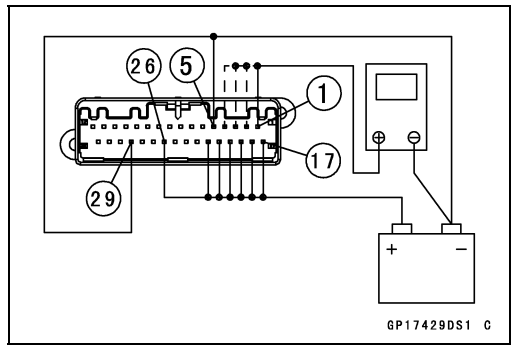

Check 3-9: Other Inspection

- Other items of the meter unit are related to the CAN communication line.
- When the other items are faulty indication, check the followings.

  Wiring (see Wiring Inspection)
  Fuel Injectors (see Fuel Injectors section in the Fuel System (DFI) chapter)
  Each Sensor (see Appropriate Chapters)

★If the above items are good, replace the meter unit and/or ECU.

Meter, Gauge, Indicator Unit

Meter Circuit

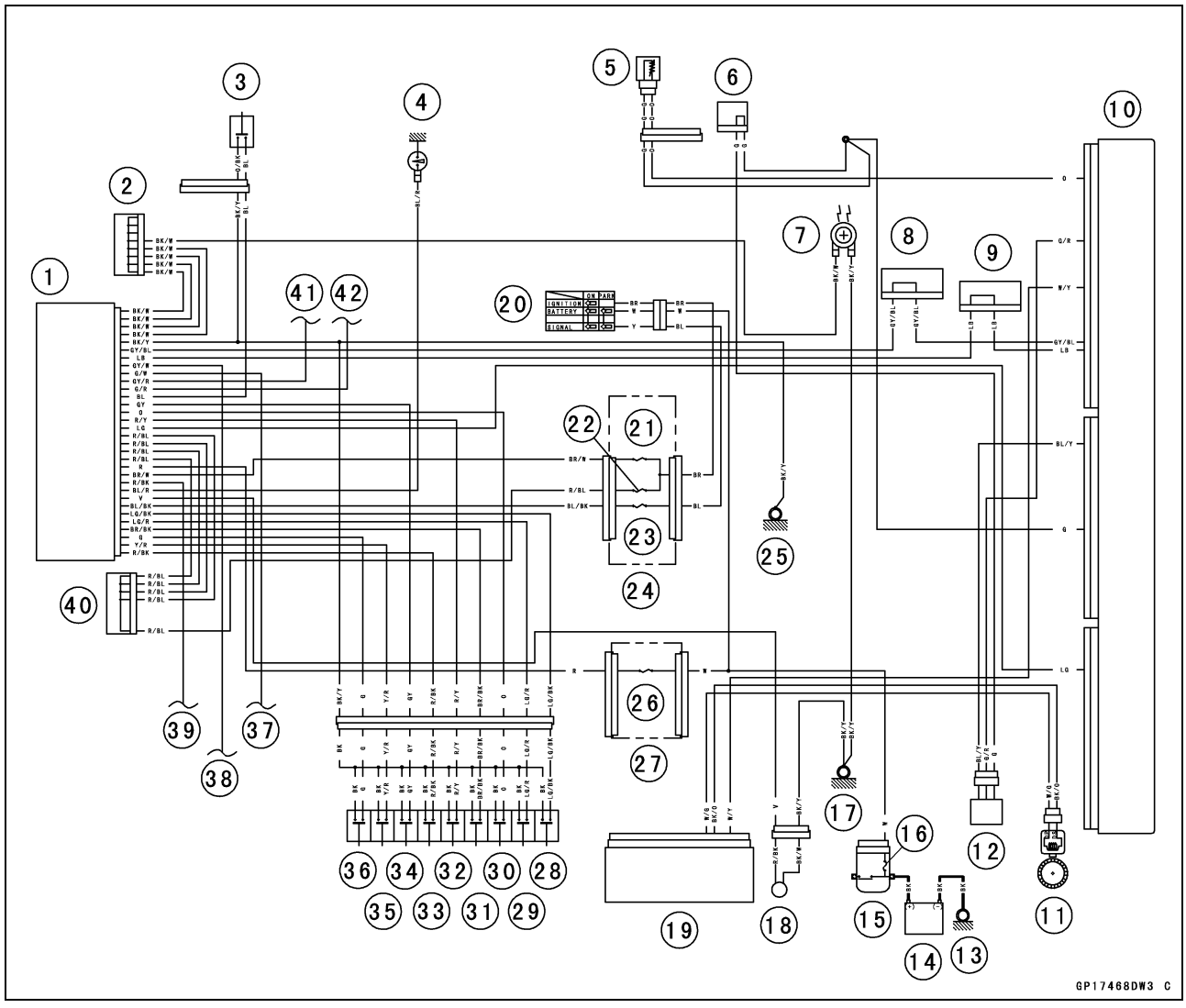

1. Meter Unit
2. Joint Connector A
3. Mode Button
4. Oil Pressure Switch
5. Water Temperature Sensor
6. Joint Connector G
7. Horn
8. Joint Connector I
9. Joint Connector H
10. ECU
11. Rear Wheel Rotation Sensor
12. Gear Position Sensor
13. Engine Ground
14. Battery 12 V 8.6 Ah
15. Starter Relay
16. Main Fuse 30 A
17. Frame Ground (3)
18. Fuel Level Sensor
19. ABS Hydraulic Unit
20. Ignition Switch
21. Ignition Fuse 15 A
22. Brake Light/Horn Fuse 10 A
23. Turn Signal Relay Fuse 10 A
24. Fuse Box (1)
25. Frame Ground (1)
26. Meter Fuse 10 A
27. Fuse Box (2)
28. Lower Button
29. Upper Button
30. Hazard Switch
31. Horn Button
32. Passing Button
33. Dimmer Switch
34. Right Turn Signal Switch
35. Turn Signal Cancel Switch
36. Left Turn Signal Switch
37. To Front Left Turn Signal Light (LED)
38. To Front Right Turn Signal Light (LED)
39. To Headlight (LED)
40. Joint Connector B
41. To Rear Right Turn Signal Light (LED)
42. To Rear Left Turn Signal Light (LED)

Immobilizer System (Equipped Models)

This motorcycle is equipped with an immobilizer system to protect the motorcycle from theft. This system provides a theft proof device by means of matching a code between the inbuilt key transponder and ECU. If the code does not match, ignition system, injectors, subthrottle valve actuator and exhaust butterfly valve actuator will not operate and the engine will not start.

Abstract

- Do not keep more than one immobilizer key of any system on a key ring. Jamming of the key code signal may occur and the operation of the system may be affected.
- The red immobilizer warning indicator light (LED) will blink for a period of 24 hours once the ignition switch has been switched off and the key removed. This blinking can be set to on or off as desired by holding the upper and lower buttons on the left switch housing down for 2 seconds within 20 seconds of switching the ignition off.
- If all coded keys are lost the ECU and ignition switch will have to be replaced.
- The immobilizer system can not function until the ignition key code is registered in the ECU.
- A total of five keys can be registered in the ECU at any one time.

Operational Cautions

1. Do not put two keys of any immobilizer system on the same key ring.
2. Do not submerge any key in water.
3. Do not expose any key to excessively high temperature.
4. Do not place any key close to magnet.
5. Do not place a heavy item on any key.
6. Do not grind any key or alter its shape.
7. Do not disassemble the plastic part of any key.
8. Do not drop the key and/or apply any shocks to the key.
9. When a ignition key is lost, the user should go to his dealer to invalidate the lost key registration in the ECU.
10. When the all ignition keys are lost, the user should go to his dealer and have a new ECU installed and register the ignition keys.

NOTE

○*No.9 and 10 are strongly recommended to the customer to ensure security of the motorcycle.*

Key Registration

Case 1: When additional spare ignition key is required.

NOTE

○*Two ignition keys have been already registered in this case.*

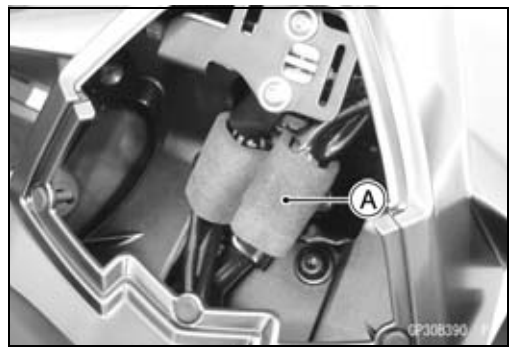

- Prepare a new spare ignition key.
- Cut the key in accordance with the shape of the current ignition key.
- Remove the seat (see Seat Removal in the Frame chapter).
- Remove the immobilizer/Kawasaki diagnostic system connector cover [A] and cap.

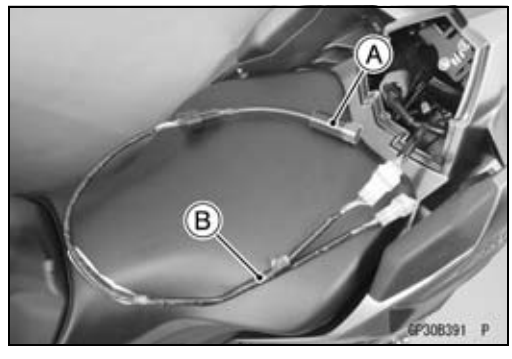

- Connect the key registration unit [A] and key registration adapter [B] as shown.

Special Tools - Key Registration Unit: 57001-1582
Key Registration Adapter: 57001-1746

Immobilizer System (Equipped Models)

● Insert one of the registered ignition keys to the ignition switch and turn it to “ON.”

Verified

○The red immobilizer warning indicator light (LED) [A] blinks to display the registration mode (go to the next step).

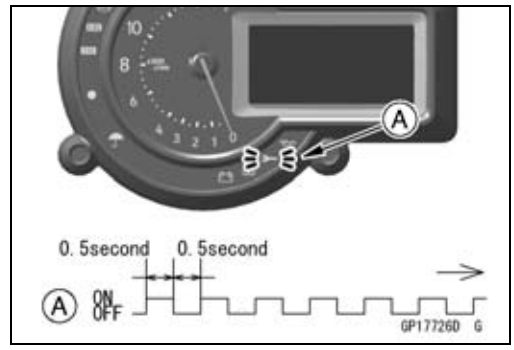

Not Verified

○The red immobilizer warning indicator light (LED) [A] blinks to display the collation error (refer to the following failure illustrations).

Immobilizer Amplifier Failure

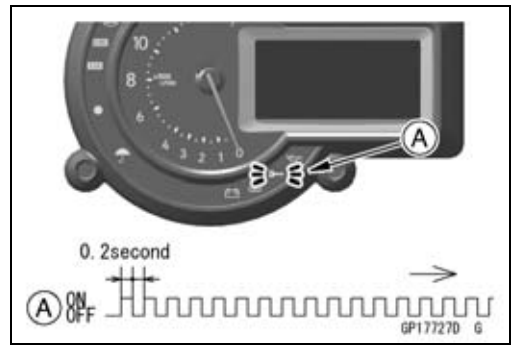

Registered Ignition Key Collation Error

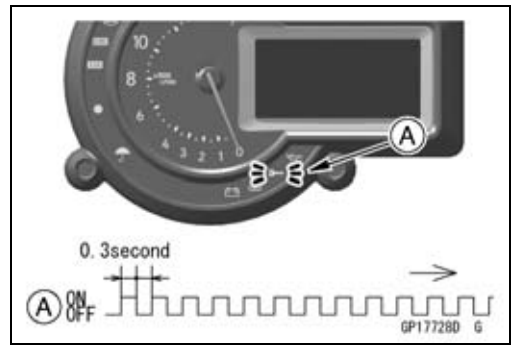

● Turn the registered ignition key to “OFF” and remove the registered ignition key.

○The red immobilizer warning indicator light (LED) [A] blinks continuously to display that the ECU is in the registration mode for 15 seconds.

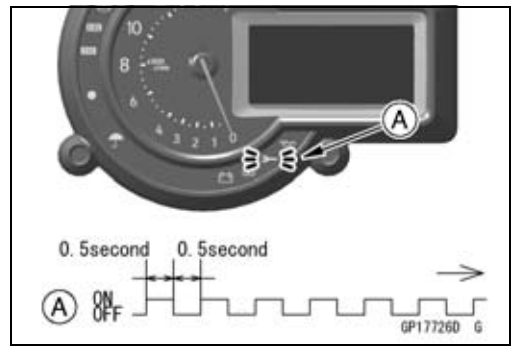

● Insert the other registered ignition key to the ignition switch and turn it to “ON.”

● Confirm that following.

○The red immobilizer warning indicator light (LED) [A] blinks 2 times and stops for 1 second and then repeats.

○If there is any problem in the registration, the red immobilizer warning indicator light (LED) blinks to display collation error as mentioned above.

● Turn the registered ignition key to “OFF” and remove the registered ignition key.

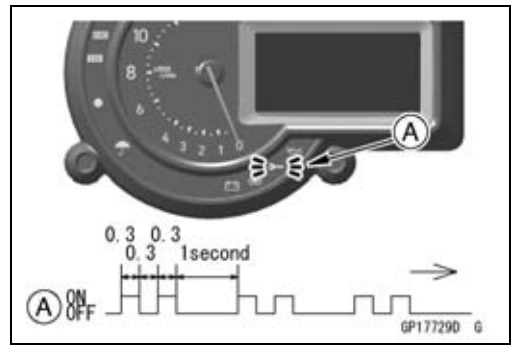

Immobilizer System (Equipped Models)

NOTE

○*Insert next key and turn it to "ON" within 15 seconds after previous key is turned to "OFF" and removed otherwise registration mode will be ended and the red immobilizer warning indicator light (LED) stops blinking.*

○*To return to the registration mode start the registered ignition key(s) verification procedure. This applies to all ignition key registration.*

● Insert the new ignition key 1 to the ignition switch and turn it to "ON."

NOTE

○*Keep the other ignition key away from the immobilizer antenna.*

○If there is any problem in the registration, the red immobilizer warning indicator light (LED) [A] blinks to display the collation error.

Immobilizer Amplifier Failure

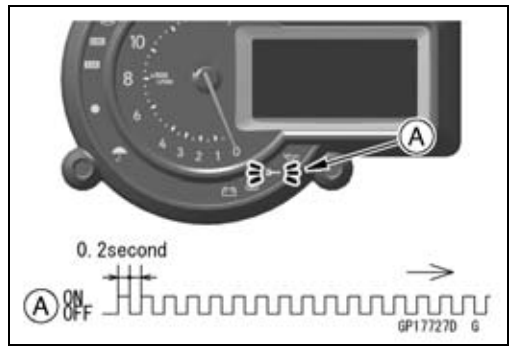

When Registered Ignition Key is Inserted.

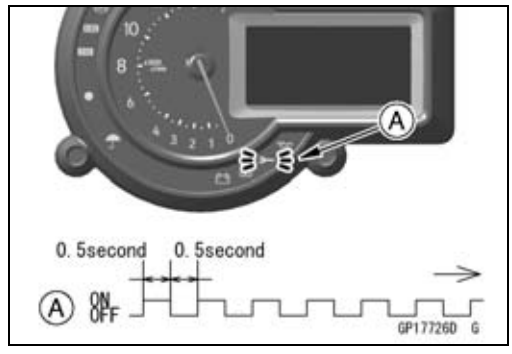

Ignition Key Collation Error

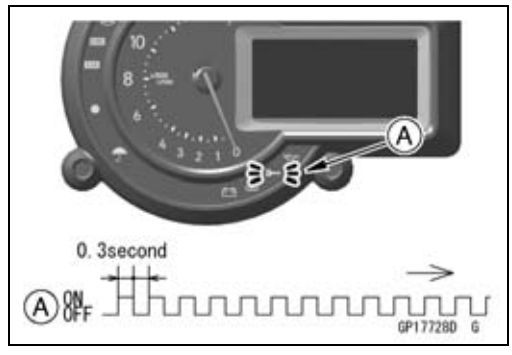

Immobilizer System (Equipped Models)

● The ignition key 1 is successfully registered in the ECU.
○The red immobilizer warning indicator light (LED) [A] blinks 3 times and stops for 1 second and then repeats this cycle.

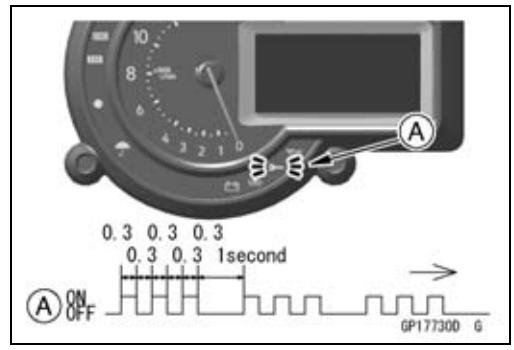

● Turn the ignition key 1 to “OFF” and remove the ignition key 1.
○The red immobilizer warning indicator light (LED) [A] blinks to display the registration mode.

NOTE

○*Turn to “OFF” the ignition switch and wait for the period of 15 seconds or more. The registration mode automatically finishes and the red immobilizer warning indicator light (LED) will switch off.*
○*This procedure registered the registered ignition key and one ignition key.*
○*Continue with the procedure to register the second and later keys before the 15 seconds period has elapsed.*

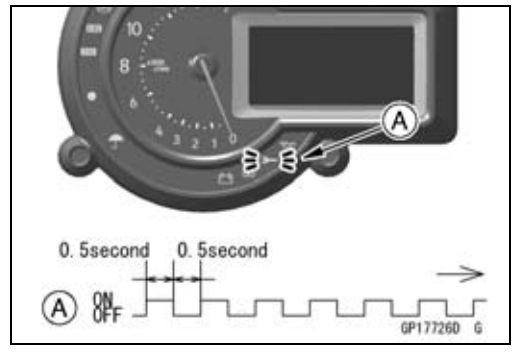

● Insert the new ignition key 2 to the ignition switch and turn it to “ON.”

○If there is any problem in the registration, the red immobilizer warning indicator light (LED) [A] blinks to display the collation error.
Immobilizer Amplifier Failure

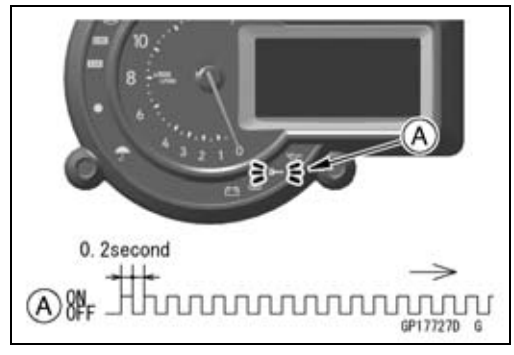

When Registered Ignition Key is Inserted.

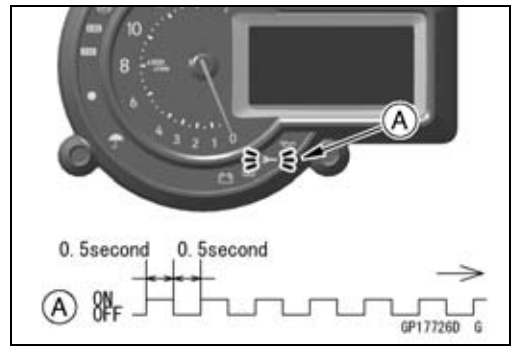

Immobilizer System (Equipped Models)

Ignition Key Collation Error

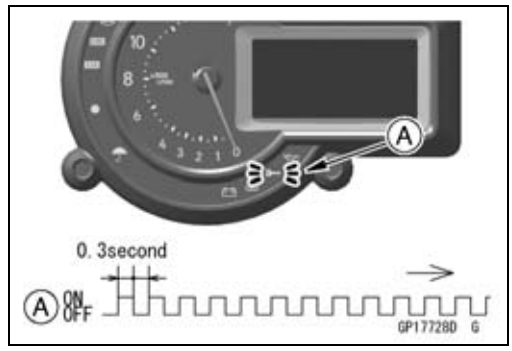

- The ignition key 2 is registered in the ECU.

○The red immobilizer warning indicator light (LED) [A] blinks 4 times and stops for 1 second and then repeats this cycle.

○This procedure has registered the 2 ignition keys.

- Continue with the procedure to register an additional one ignition key.

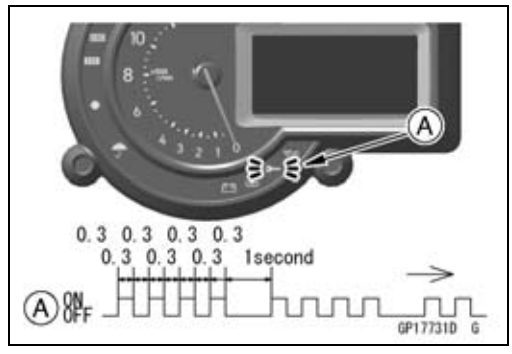

NOTE

○*The ECU can store up the five key codes.*

Red Immobilizer Warning Indicator Light (LED)

	Indicator Blinks	Indicator Stop	Remarks
Ignition Key 3	5 times	1 second	Repeat

- Turn to “OFF” the ignition switch and wait for period of more than 15 seconds.
- The registration mode automatically ends.
- The red immobilizer warning indicator light (LED) goes off [A].

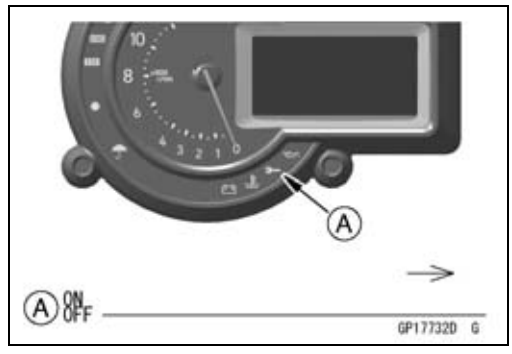

- Remove the key registration unit, key registration adapter and install the immobilizer/Kawasaki diagnostic system connector cap.

NOTE

○*Turn the ignition switch to “ON” with the registered ignition key.*

○*Check that the engine can be started using all registered ignition keys.*

Immobilizer System (Equipped Models)

Spare Ignition Key Registration Flow Chart (Ignition Key 1: 3rd Key)

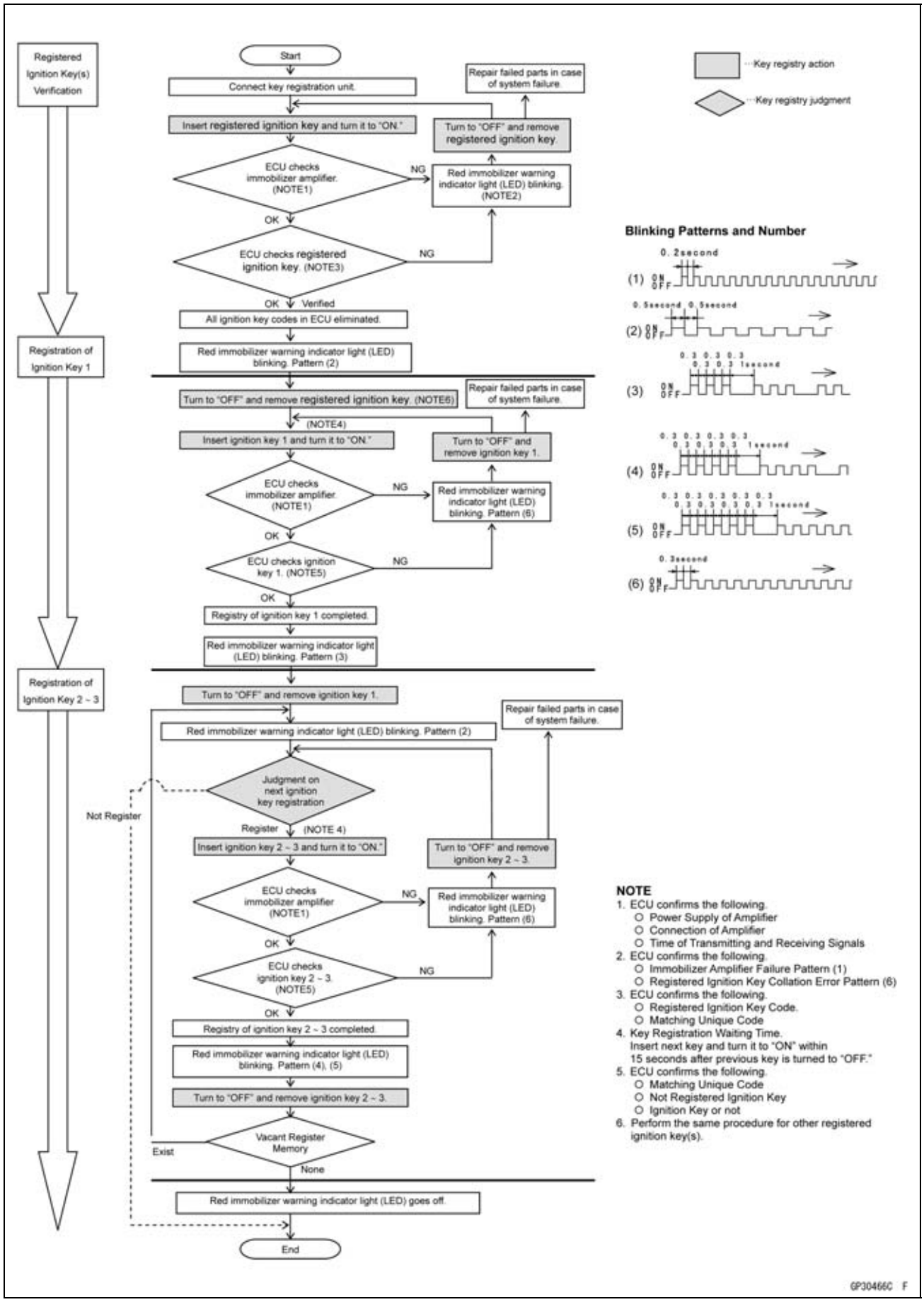

NOTE

1. ECU confirms the following.
   - O Power Supply of Amplifier
   - O Connection of Amplifier
   - O Time of Transmitting and Receiving Signals
2. ECU confirms the following.
   - O Immobilizer Amplifier Failure Pattern (1)
   - O Registered Ignition Key Collation Error Pattern (6)
3. ECU confirms the following.
   - O Registered Ignition Key Code.
   - O Matching Unique Code
4. Key Registration Waiting Time.
   Insert next key and turn it to "ON" within 15 seconds after previous key is turned to "OFF."
5. ECU confirms the following.
   - O Matching Unique Code
   - O Not Registered Ignition Key
   - O Ignition Key or not
6. Perform the same procedure for other registered ignition key(s).

GP30466C F

Immobilizer System (Equipped Models)

Case 2: When the ignition switch is faulty and to be replaced.

- Prepare a new ignition switch [A] and two new ignition keys [B].

○These parts are available as a set. Prepare the current registered ignition key [C].

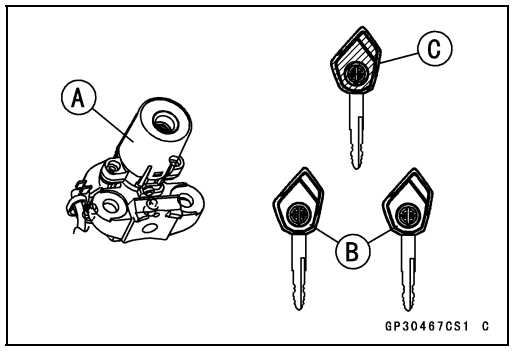

- Remove:
  Ignition Switch (see Immobilizer System Parts Replacement)
  Seat (see Seat Removal in the Frame chapter)
- Remove the immobilizer/Kawasaki diagnostic system connector cover [A] and cap.

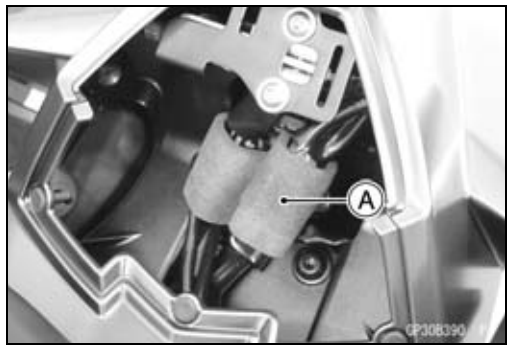

- Connect the key registration unit [A] and key registration adapter [B] as shown.

Special Tools - Key Registration Unit: 57001-1582
Key Registration Adapter: 57001-1746

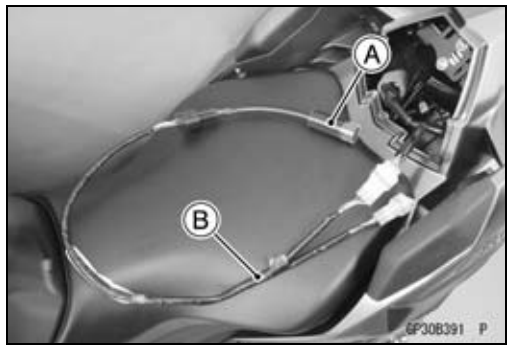

- Remove the immobilizer amplifier [A] from the upper fairing, and connect it to the main harness.

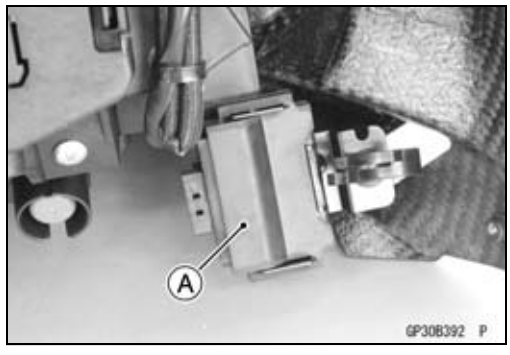

- Connect:
  New Ignition Switch Lead Connector [A]
  Current Immobilizer Antenna Lead Connector [B]

NOTE

○*Keep the ignition switches more than 15 cm (5.9 in.).*

  New Ignition Switch [C]
  Current Ignition Switch [D]

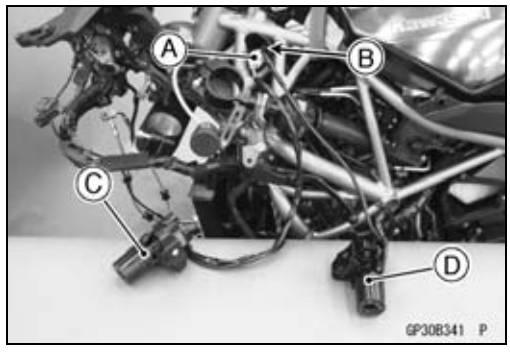

Immobilizer System (Equipped Models)

- Insert the current registered ignition key [A] at the current ignition switch [B].
- Insert the new ignition key 1 [C] to the new ignition switch [D] and turn it to “ON.”

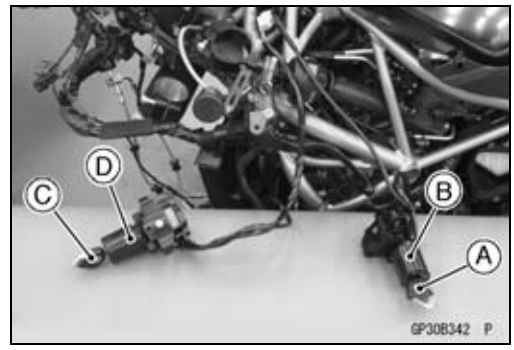

○The red immobilizer warning indicator light (LED) [A] blinks 1 time and stops for 1 second and repeats this cycle.

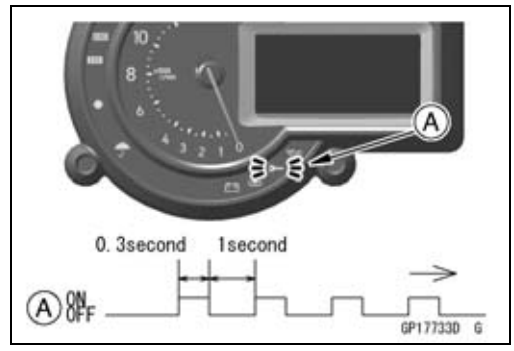

Not Verified

○The red immobilizer warning indicator light (LED) [A] blinks to display the collation error.

Immobilizer Amplifier Failure

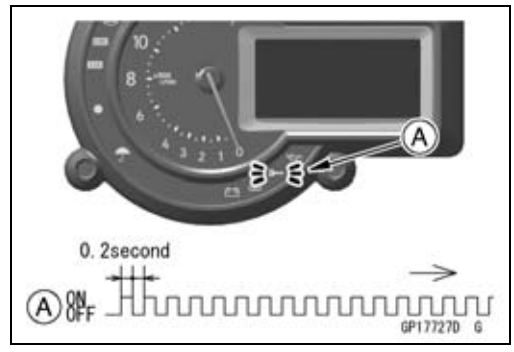

Registered Ignition Key Collation Error

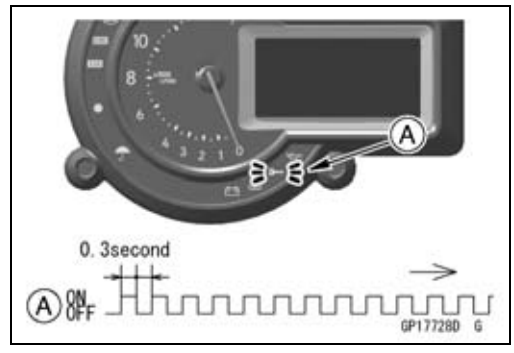

- Turn to “OFF” and remove the new ignition key 1.

NOTE

○*Insert the next key and turn it to “ON” within 15 seconds after previous key is turned to “OFF” and removed otherwise registration mode will be ended and the red immobilizer warning indicator light (LED) stops blinking.*

Immobilizer System (Equipped Models)

Verified

○The red immobilizer warning indicator light (LED) [A] blinks to display the ECU is in the registration mode (go to the next step).

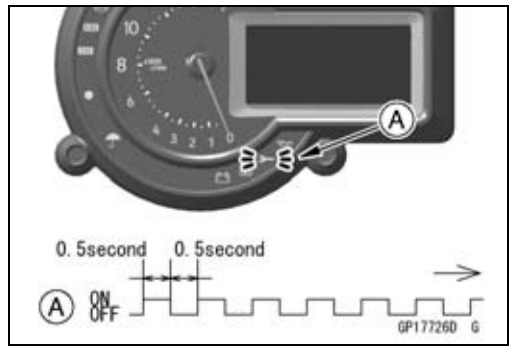

- Disconnect the immobilizer antenna lead connector, then connect the antenna lead connector of the new ignition switch.
- Insert the ignition key 1 [A] again into the new ignition switch and turn it to “ON.”

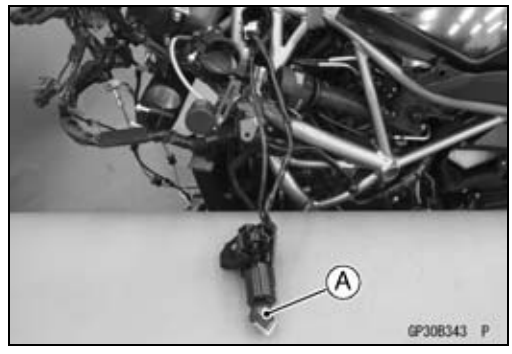

NOTE

○*Insert the next key and turn it to “ON” within 15 seconds after previous key is turned to “OFF” and removed otherwise registration mode will be ended and the red immobilizer warning indicator light (LED) stops blinking.*

○*To return to the registration mode start the registered ignition key verification procedure. This applies to all ignition key registration.*

○*Keep other ignition keys away from the ignition switch.*

○If there is any problem in the registration, the red immobilizer warning indicator light (LED) [A] blinks to display the collation error.

Immobilizer Amplifier Failure

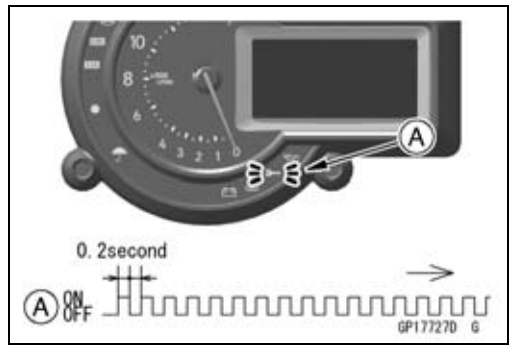

When Registered Ignition Key is Inserted.

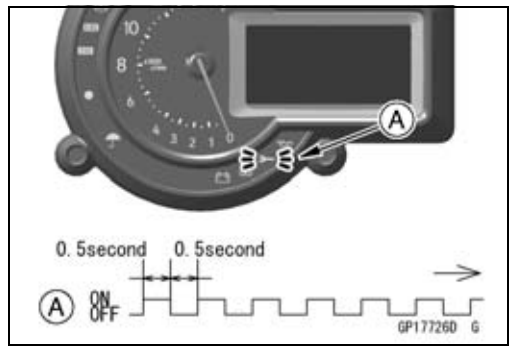

Immobilizer System (Equipped Models)

Ignition Key Collation Error

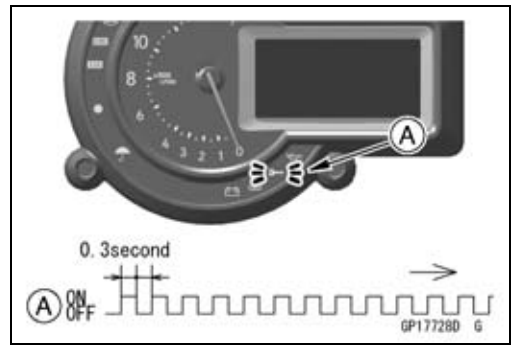

● The ignition key 1 is successfully registered in the ECU.
○The red immobilizer warning indicator light (LED) [A] blinks 2 times and stops for 1 second and then repeats this cycle to indicate successful registering of ignition key 1.

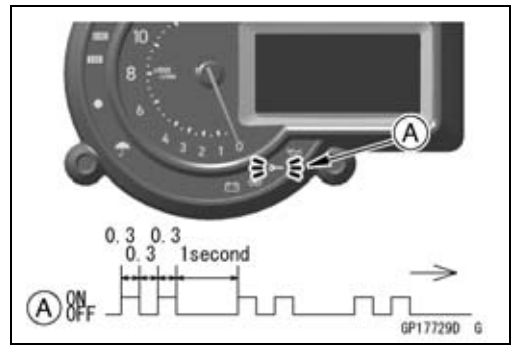

● Turn to “OFF” and remove ignition key 1.
○The red immobilizer warning indicator light (LED) [A] blinks to display the registration mode.

NOTE

○*Turn to “OFF” the ignition switch and wait for the period more than 15 seconds. The registration mode automatically ends and red immobilizer warning indicator light (LED) goes off.*
○*This procedure has , registered the registered ignition key and one ignition key.*
○*Continue the procedure to program the second and later keys.*

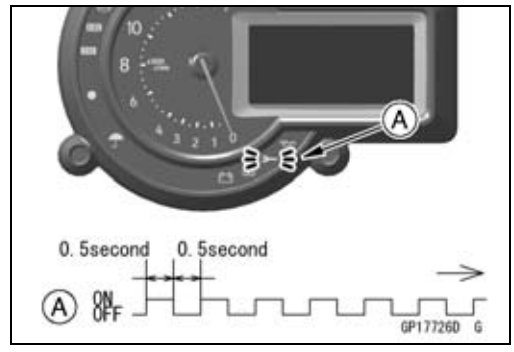

● Insert the ignition key 2 to the ignition switch and turn it to “ON.”

○If there is any problem in the registration, the red immobilizer warning indicator light (LED) [A] blinks to display the collation error.
Immobilizer Amplifier Failure

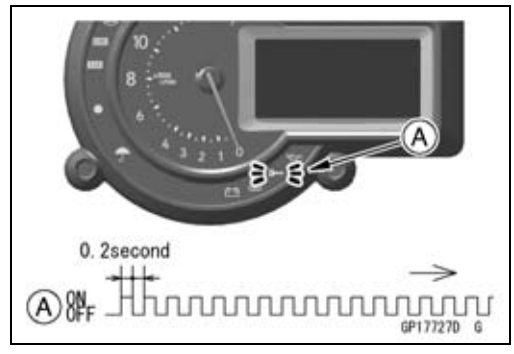

Immobilizer System (Equipped Models)

When Registered Ignition Key is Inserted.

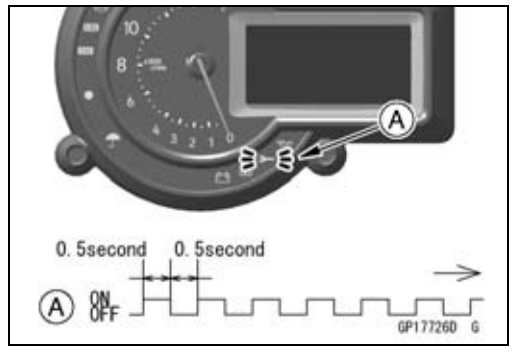

Ignition Key Collation Error

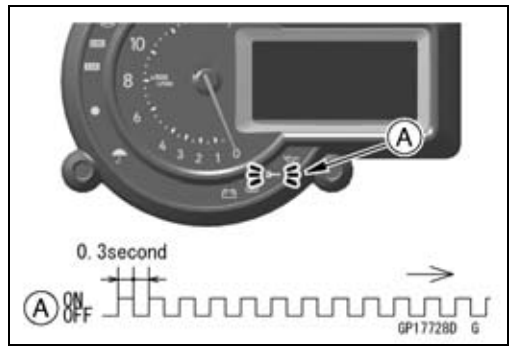

- The ignition key 2 is successfully registered in the ECU.

○The red immobilizer warning indicator light (LED) [A] blinks 3 times and stops for 1 second and then repeat this cycle to indicate successful programming of ignition key 2.

- Turn to “OFF” the ignition switch and wait for period more than 15 seconds.
- The registration mode automatically ends.

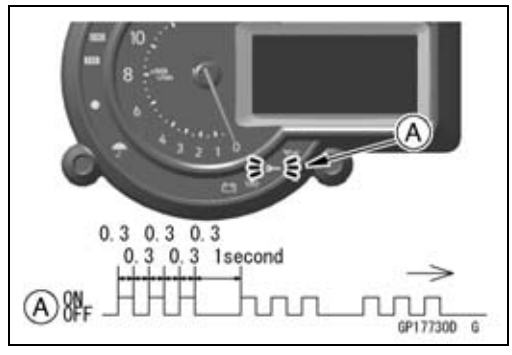

- The red immobilizer warning indicator light (LED) goes off [A].

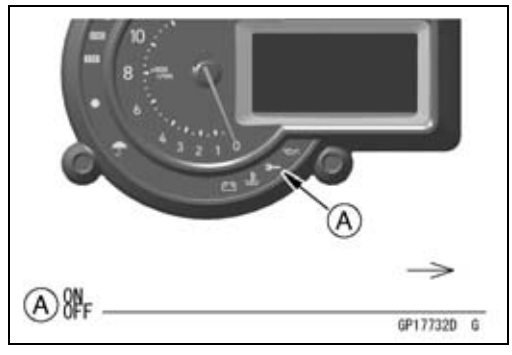

- Remove the key registration unit, key registration adapter and install the immobilizer/Kawasaki diagnostic system connector cover and cap.

NOTE

○*Turn the ignition switch to “ON” with the registered ignition key.*

○*Check that the engine can be started using all registered ignition keys.*

- Install the new ignition switch (see Immobilizer System Parts Replacement).

Immobilizer System (Equipped Models)

Case 3: When the ECU is faulty and has to be replaced.

- Prepare a new ECU [A] and current registered ignition key(s) [B].

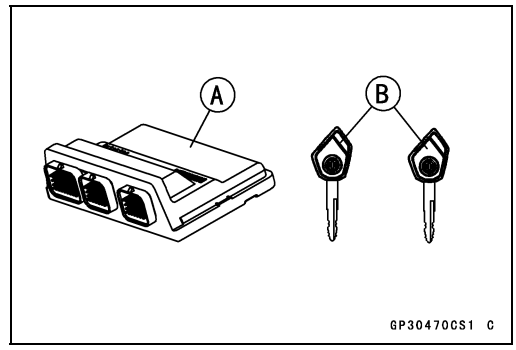

NOTE

○*The key registration unit is not required.*

○*After replacing the ECU, be sure to register the 2 ignition keys. If the 2 keys are not registered, the engine can not be started.*

- Replace the ECU (see ECU Removal/Installation in the Fuel System (DFI) chapter).
- Remove the immobilizer amplifier from the upper fairing, and connect it to the main harness.

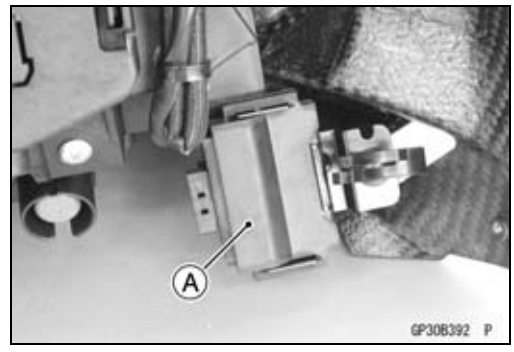

- Insert the current registered ignition key into the ignition switch and turn it to “ON.”

○If there is any problem in the registration, the red immobilizer warning indicator light (LED) [A] blinks to display the collation error.

Immobilizer Amplifier Failure

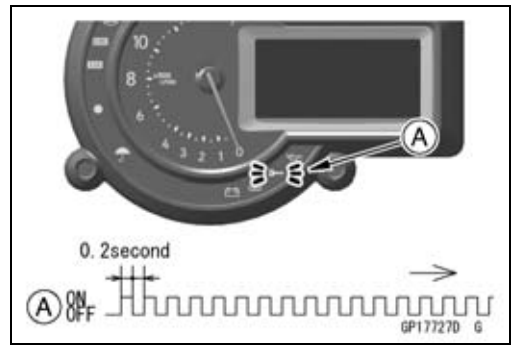

Registered Ignition Key Collation Error

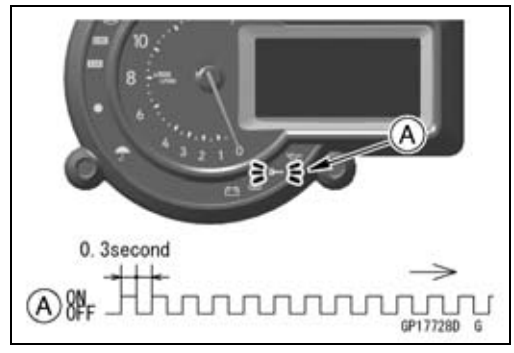

Immobilizer System (Equipped Models)

● The registered ignition key is registered in the ECU.
○The red immobilizer warning indicator light (LED) [A] blinks 1 time and stops for 1 second and the repeats this cycle to indicate successful registration of the registered ignition key.

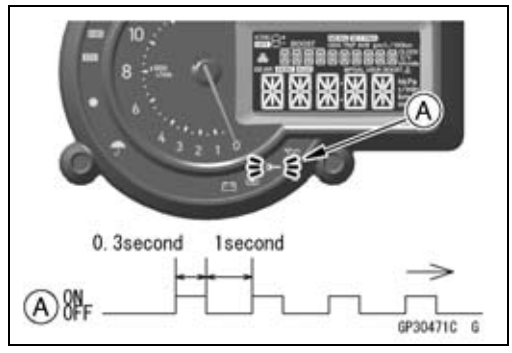

● Turn to “OFF” the registered ignition key and remove it.
○The red immobilizer warning indicator light (LED) [A] blinks to display the registration mode.

NOTE

○*Insert next key and turn it to “ON” within 15 seconds after previous key is turned to “OFF” and removed otherwise registration mode will be ended and the red immobilizer warning indicator light (LED) goes off.*
○*To return to the registration mode start the registered ignition key verification procedure. This applies to all ignition key registration.*

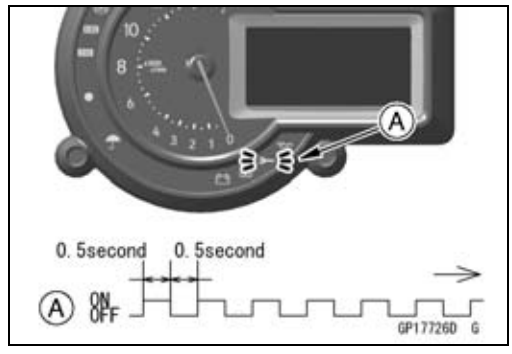

● Insert the other remaining registered ignition key to the ignition switch and turn it to “ON.”

NOTE

○*Keep the other ignition keys away from the immobilizer antenna.*

○If there is any problem in the registration, the red immobilizer warning indicator light (LED) [A] blinks to display the collation error.
Immobilizer Amplifier Failure

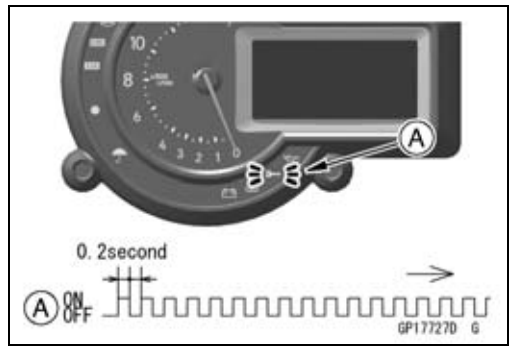

When Registered Ignition Key is Inserted.

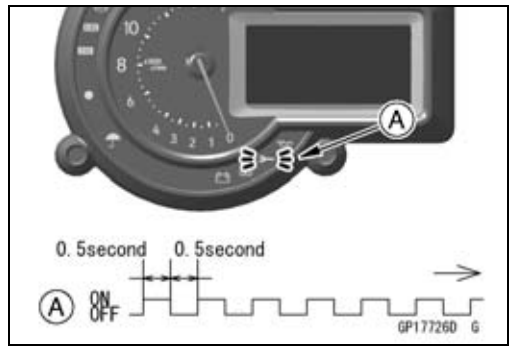

Immobilizer System (Equipped Models)

Ignition Key Collation Error

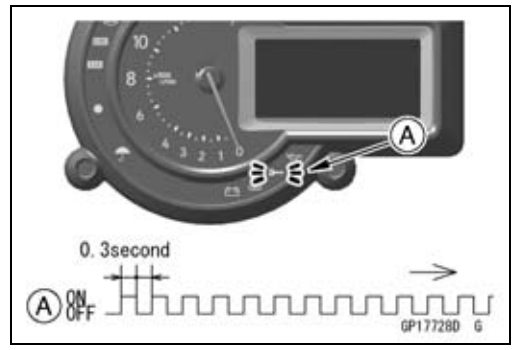

- The other remaining ignition key is registered in the ECU.

○The red immobilizer warning indicator light (LED) [A] blinks 2 times and stops for 1 second and then repeats this cycle to indicate successful registration of ignition key.

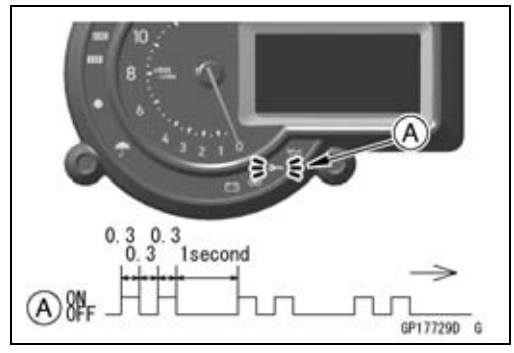

- Turn to “OFF” the ignition switch and wait for period more than 15 seconds.
- The registration mode automatically ends.
- The red immobilizer warning indicator light (LED) goes off [A].

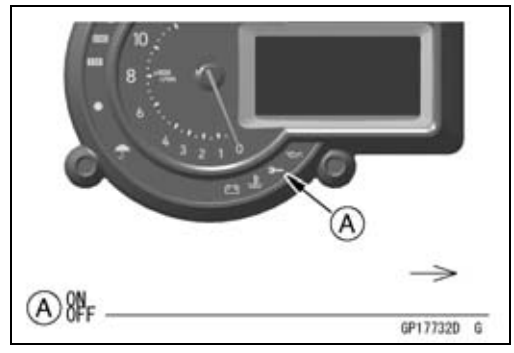

NOTE

○*Turn the ignition switch to “ON” with the registered ignition key.*

○*Check that the engine can be started using all registered ignition keys.*

Case 4: When all registered ignition keys are faulty or lost.

The all registered ignition keys replacement is considered very rare case. However if it is required, the following is necessary.

NOTE

○*The ECU must be replaced with a new one because the registered ignition key code that is registered in the current ECU can not be rewritten.*

Immobilizer System (Equipped Models)

● Prepare a new ECU [A] and 2 new ignition keys [B].

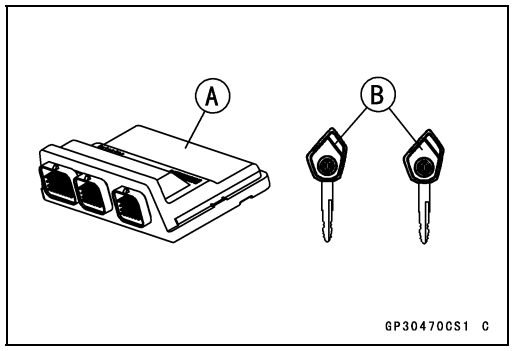

NOTE

○*The key registration unit is not required.*

○*After replacing the ECU, be sure to register the 2 ignition keys. If the 2 keys are not registered, the engine can not be started.*

● Insert the first ignition key into the ignition switch and turn it to “ON.”

○If there is any problem in the registration, the red immobilizer warning indicator light (LED) [A] blinks to display the collation error.

Immobilizer Amplifier Failure

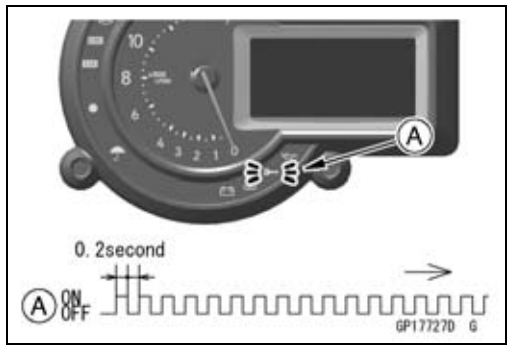

Ignition Key Collation Error

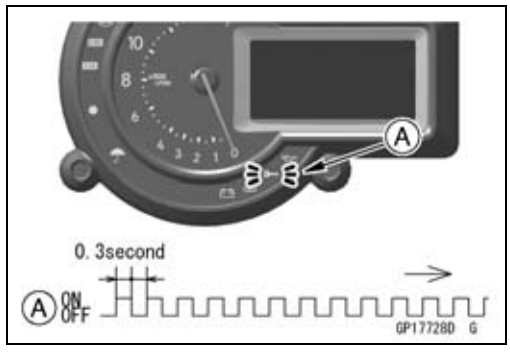

● The first ignition key is registered in the ECU.

○The red immobilizer warning indicator light (LED) [A] blinks 1 time and stops for 1 second and the repeats this cycle to indicate successful registration of the first ignition key.

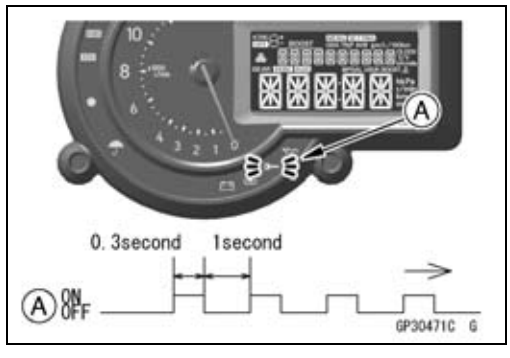

Immobilizer System (Equipped Models)

- Turn to “OFF” the first ignition key and remove it.
- The red immobilizer warning indicator light (LED) [A] blinks to display the registration mode.

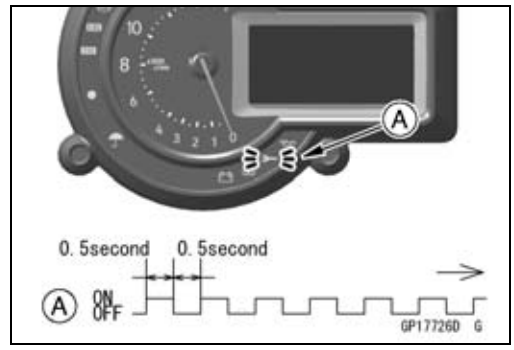

NOTE

○*Insert next key and turn it to “ON” within 15 seconds after previous key is turned to “OFF” and removed otherwise registration mode will be ended and the red immobilizer warning indicator light (LED) goes off.*

○*To return to the registration mode start the registered ignition key verification procedure. This applies to all ignition key registration.*

- Insert the second ignition key to the ignition switch and turn it to “ON.”

NOTE

○*Keep the other ignition keys away from the immobilizer antenna.*

○If there is any problem in the registration, the red immobilizer warning indicator light (LED) [A] blinks to display the collation error.

Immobilizer Amplifier Failure

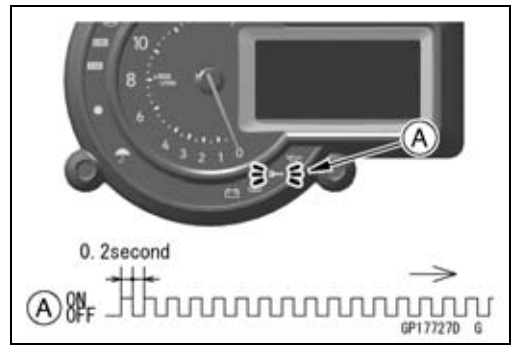

When Registered Ignition Key is Inserted

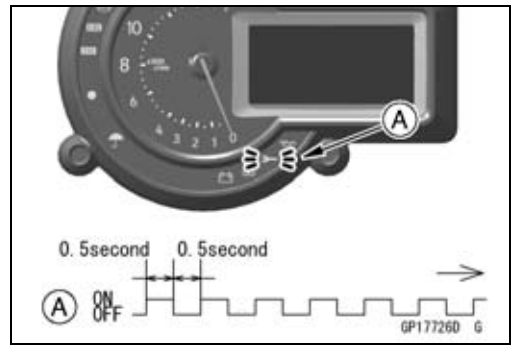

Ignition Key Collation Error

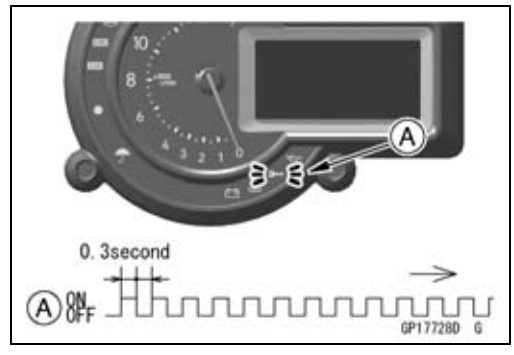

Immobilizer System (Equipped Models)

● The second ignition key is registered in the ECU.
○The red immobilizer warning indicator light (LED) [A] blinks 2 times and stops for 1 second and then repeats this cycle to indicate successful registration of second ignition key.
● Turn to “OFF” the ignition switch and wait for period more than 15 seconds.
● The registration mode automatically ends.

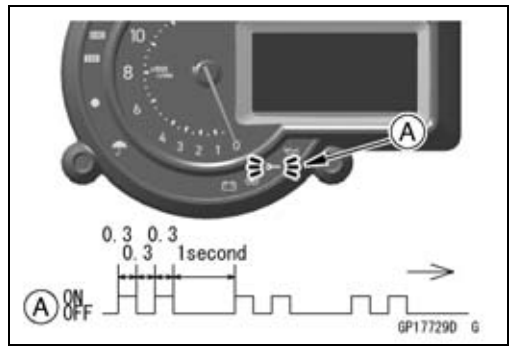

● The red immobilizer warning indicator light (LED) [A] goes off.

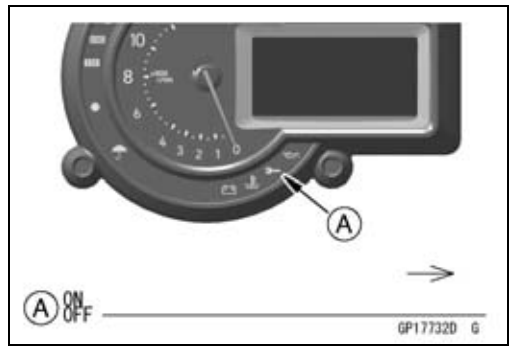

NOTE

○*Turn the ignition switch to “ON” with the registered ignition key.*
○*Check that the engine can be started using all registered ignition keys.*

Immobilizer System (Equipped Models)

All Keys Initial Registration Flow Chart

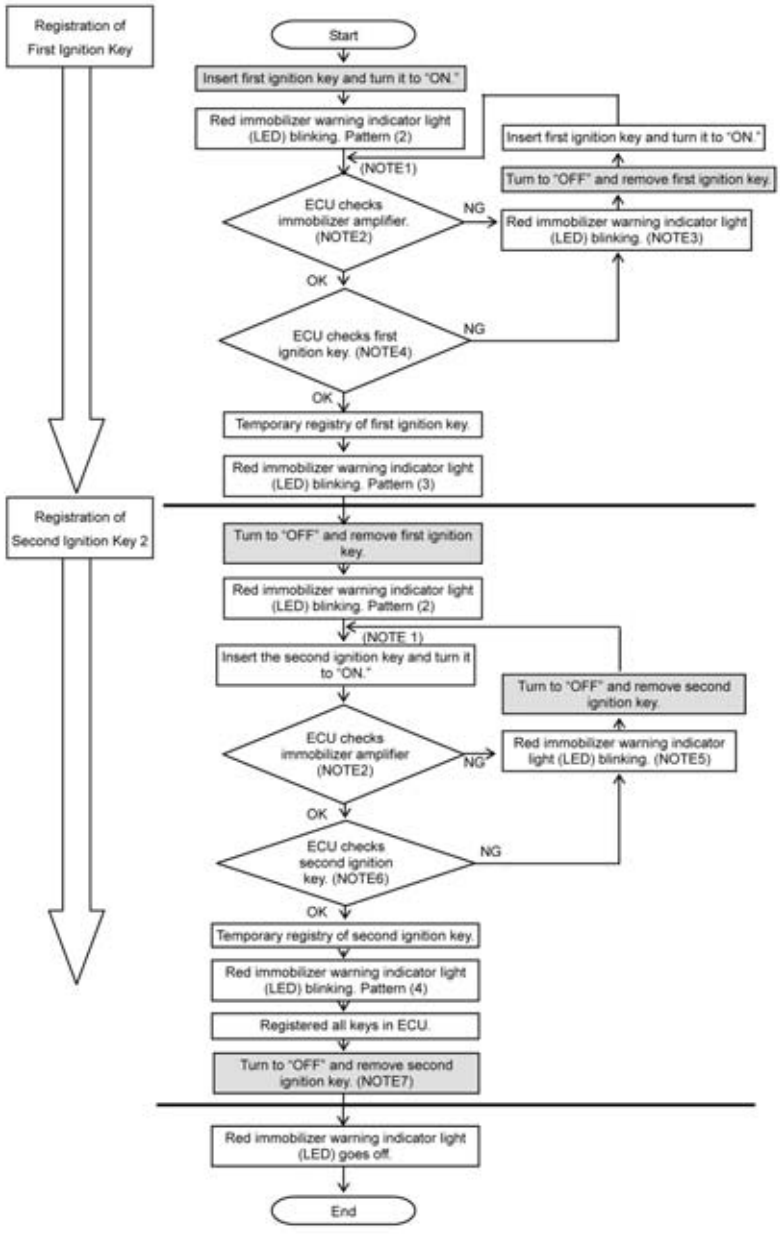

NOTE

1. Key Substitute Time
   Insert next key and turn it to "ON" within 15 seconds after previous key is turned to "OFF."
2. ECU confirms the following.
   - O Power Supply of Amplifier
   - O Connection of Amplifier
   - O Time of Transmitting and Receiving Messages.
3. ECU confirms the following.
   - O Immobilizer Amplifier Failure Pattern (1)
   - O Ignition Key Collation Error Pattern (5)
4. ECU confirms the following.
   - O Ignition Key or Not
   - O Match the Unique Code
5. ECU confirms the following.
   - O Immobilizer Amplifier Failure Pattern (1)
   - O Second Ignition Key Collation Error Pattern (5)
   - O Registered Ignition Key is Inserted Pattern (2)
6. ECU confirms the following.
   - O Ignition Key or Not.
   - O Match the Unique Code
   - O Not Registered Ignition Key
7. When the ECU-registered key is turned to "OFF", ECU keeps the power on for two seconds.
   And then, in two seconds after the key is turned to "OFF", ECU turns the power off.

GP30473C F

Immobilizer System (Equipped Models)

Immobilizer System Parts Replacement

Ignition Switch Replacement

- Remove:
  Steering Stem Head (see Handlebar Removal in the Steering chapter)

- Using a small chisel or punch [A], turn out the Torx bolts.

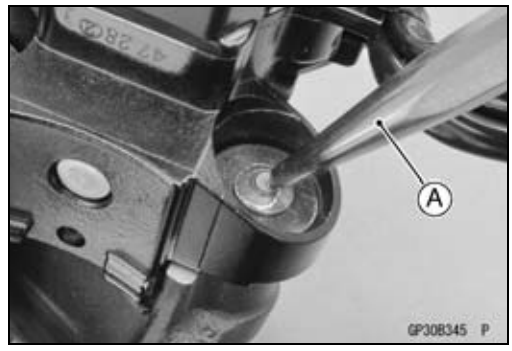

- Remove:
  Washers [A]
  Dampers [B]
  Ignition Switch [C]
  Collars [D]

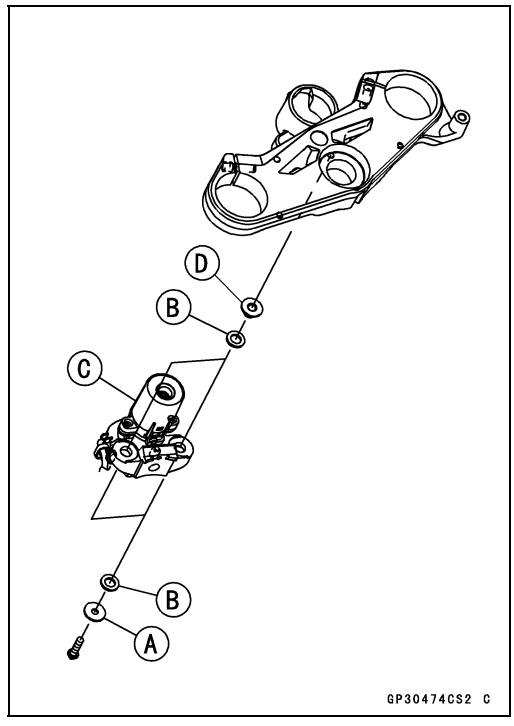

Immobilizer System (Equipped Models)

- Replace the ignition switch [A] and two Torx bolts [B] with new ones.
- Install:
  Dampers [C]
  Collars [D]
  Washers [E]
  Torx Bolts

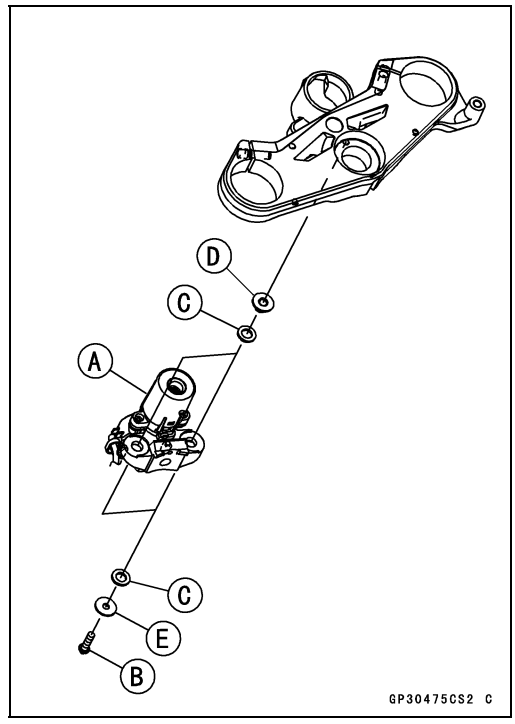

- Register the more than two ignition keys (see Key Registration).
- Tighten a new Torx bolt [A] until the bolt head [B] is broken [C].
- Install the removed parts (see appropriate chapters).
- Run the leads correctly (see Cable, Wire, and Hose Routing section in the Appendix chapter).

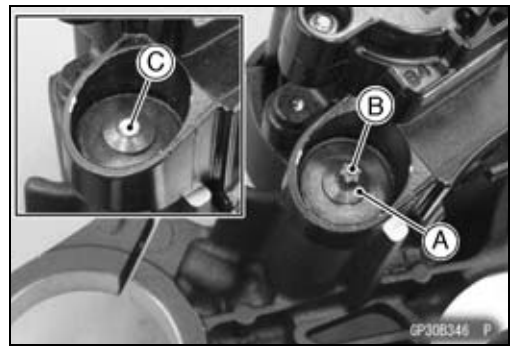

Immobilizer Amplifier Replacement

- Remove the upper fairing (see Upper Fairing Removal in the Frame chapter).
- Remove the immobilizer amplifier [A] from the upper fairing.
- Installation is the reverse of removal.

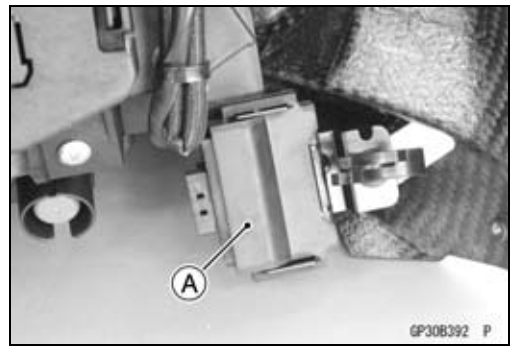

ECU Replacement

NOTICE
Never drop the ECU especially on a hard surface. Such a shock to the ECU can damage it.

- Refer to the ECU Removal in the Fuel System (DFI) chapter.

Immobilizer System (Equipped Models)

Registered Immobilizer Relational Parts Replacement Chart

		Failed or Lost Part			
		Ignition Keys	Ignition Switch	Amplifier	ECU
*	Ignition Key	●	○		
	Ignition Switch		●		
	Amplifier			●	
	ECU	○			●

*	Replacement Part
●	Main Replacement Part
○	Additional Replacement Part

Immobilizer System Inspection

- Refer to the Immobilizer Amplifier and Blank Key Detection section in the Fuel System (DFI) chapter.

Immobilizer System (Equipped Models)

Immobilizer System Circuit

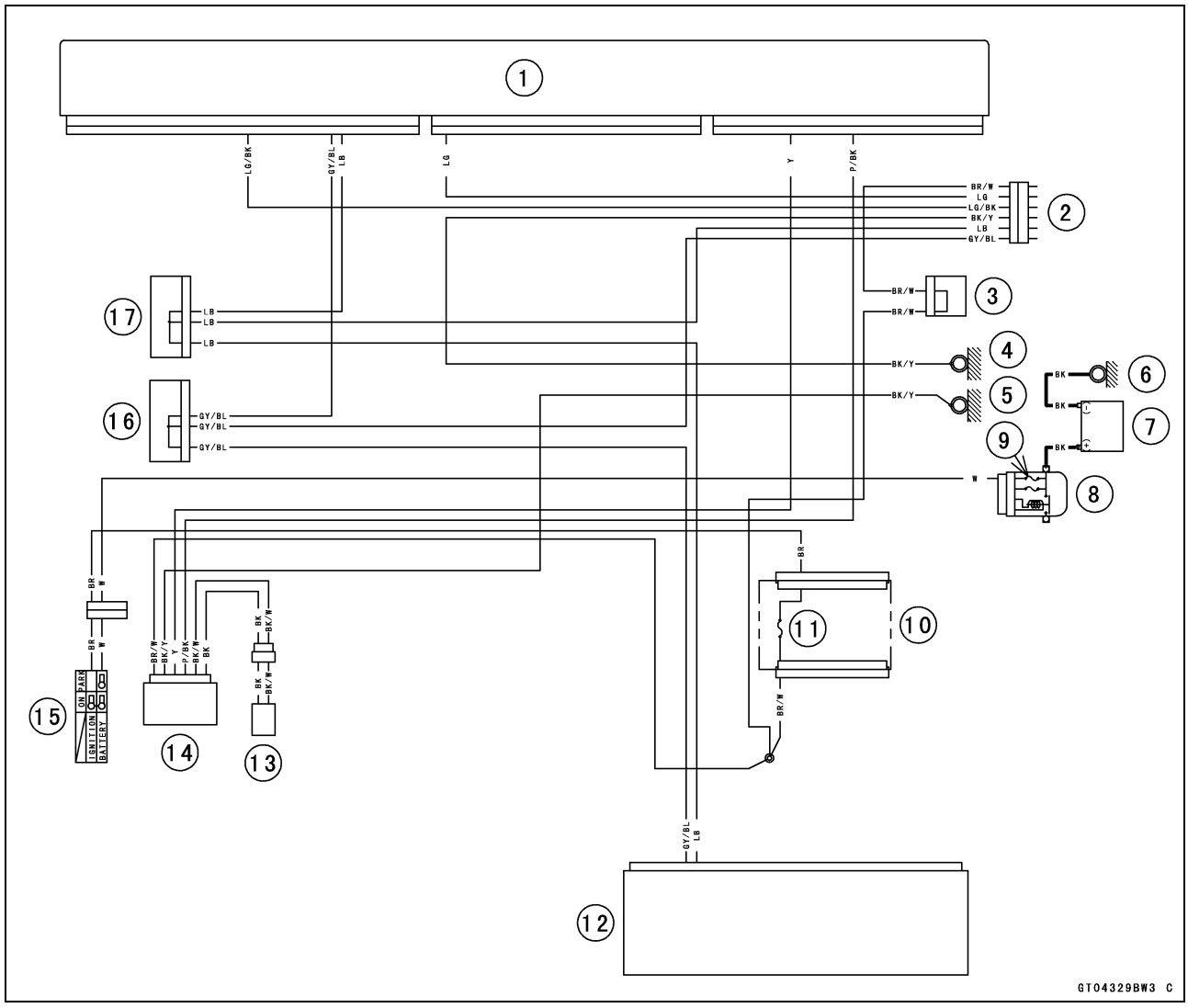

1. ECU
2. Immobilizer/Kawasaki Diagnostic System Connector
3. Joint Connector F
4. Frame Ground (4)
5. Frame Ground (1)
6. Engine Ground
7. Battery 12 V 8.6 Ah
8. Starter Relay
9. Main Fuse 30 A
10. Fuse Box (1)
11. Ignition Fuse 15 A
12. Meter Unit
13. Immobilizer Antenna
14. Immobilizer Amplifier
15. Ignition Switch
16. Joint Connector H
17. Joint Connector I

Switches and Sensors

Brake Light Timing Inspection

● Refer to the Brake Light Switch Operation Inspection in the Periodic Maintenance chapter.

Brake Light Timing Adjustment

● Refer to the Brake Light Switch Operation Inspection in the Periodic Maintenance chapter.

Switch Inspection

● Using a tester, check to see that only the connections shown in the table have continuity (about zero ohms).

○For the switch housings and the ignition switch, refer to the tables in the Wiring Diagram.

★If the switch has an open or short, repair it or replace it with a new one.

Rear Brake Light Switch Connections

Rear Brake Light Switch Connections		
Color	BR	BL
When brake pedal is pushed down	○———	———○
When brake pedal is released		

Side Stand Switch Connections

Side Stand Switch Connections		
Color	BK	G
When side stand is down		
When side stand is up	○———	———○

Oil Pressure Switch Connections*

Oil Pressure Switch Connections *		
Color	SW. Terminal	Ground
When engine is stopped	○———	———○
When engine is running		

*: Engine lubrication system is in good condition.

Switches and Sensors

Water Temperature Sensor Inspection

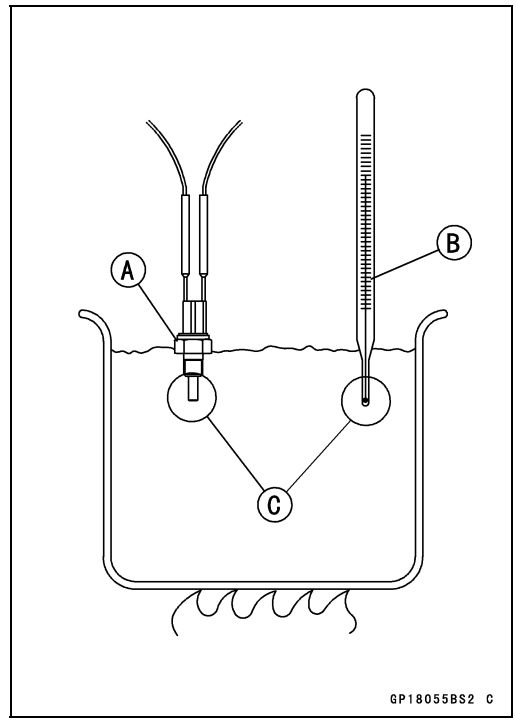

- Remove the water temperature sensor (see Water Temperature Sensor Removal/Installation in the Self-Diagnosis System chapter).
- Suspend the sensor [A] in a container of coolant so that the threaded portion is submerged.
- Suspend an accurate thermometer [B] with temperature sensing portions [C] located in almost the same depth.

NOTE

○*The sensor and thermometer must not touch the container side or bottom.*

- Place the container over a source of heat and gradually raise the temperature of the coolant while stirring the coolant gently.
- Using a digital meter, measure the internal resistance of the sensor.

★If the digital meter does not show the specified values, replace the sensor.

Water Temperature Sensor Resistance

Temperature	Resistance (kΩ)
–20°C (–4°F)	*18.80 ±2.37
0°C (32°F)	*(about 6.544)
40°C (104°F)	1.136 ±0.095
100°C (212°F)	0.1553 ±0.0070

*: Reference Information

Oxygen Sensor Removal

NOTICE
Never drop the sensor especially on a hard surface. Such a shock to the sensor can damage it.

NOTICE
Do not pull strongly, twist, or bend the oxygen sensor lead. This may cause the wiring open.

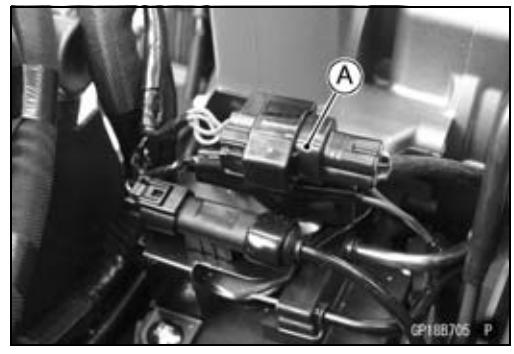

- Remove the fuel tank (see Fuel Tank Removal in the Fuel System (DFI) chapter).
- Disconnect the oxygen sensor lead connector [A].
- Remove the oxygen sensor [A].



Switches and Sensors

Oxygen Sensor Installation

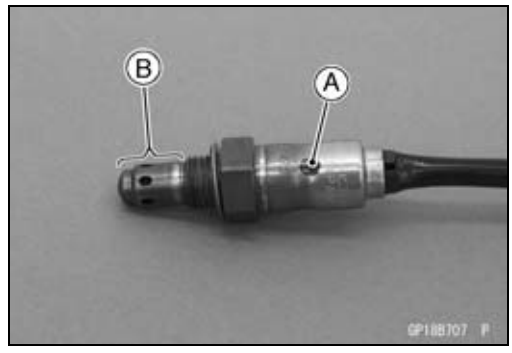

NOTICE

Never drop the oxygen sensor [A] especially on a hard surface. Such a shock to the unit can damage it. Do not touch the sensing part [B] to prevent oil contact. Oil contamination from hands can reduce sensor performance.

- Tighten:

Torque - Oxygen Sensor: 25 N·m (2.5 kgf·m, 18 ft·lb)

- Run the oxygen sensor lead correctly (see Cable, Wire, and Hose Routing section in the Appendix chapter).
- Install the removed parts (see appropriate chapters).

Oxygen Sensor Inspection

- Refer to the Oxygen Sensor Inspection in the Self -Diagnosis System chapter.

Fuel Reserve Switch Inspection

- Fill the fuel tank with fuel and close the fuel tank cap.
- Remove the seat (see Seat Removal in the Frame chapter).
- Disconnect the fuel pump lead connector [A].

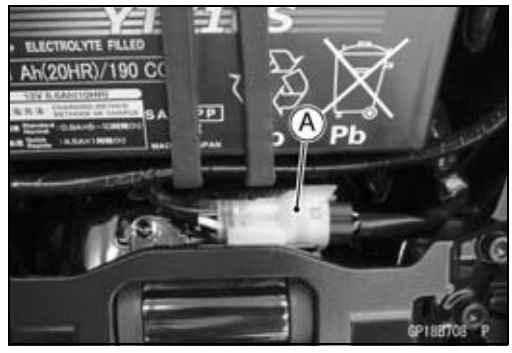

- Connect the test light [A] (12 V 3.4 W bulb in a socket with leads) and the 12 V battery [B] to the fuel pump lead connector [C].

Connections:

Battery (+) → 12 V 3.4 W Bulb (One Side)

12 V 3.4 W Bulb (Other Side) → R/BK lead [D]

Battery (–) → BK/W lead [E]

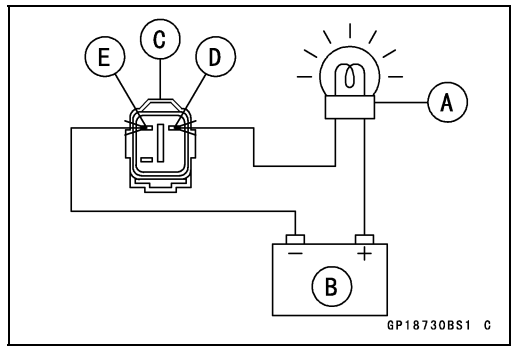

★If the test light turn on, the reserve switch is defective. Replace the fuel pump.

- Draw the fuel out from the fuel tank with a commercially available pump (see Fuel Tank Removal in the Fuel System (DFI) chapter).
- Connect the test light (12 V 3.4 W bulb in a socket with leads) and the 12 V battery to the fuel pump lead connector in the same way again.

Connections:

Battery (+) → 12 V 3.4 W Bulb (One Side)

12 V 3.4 W Bulb (Other Side) → R/BK lead

Battery (–) → BK/W lead

★If the test light does not light, replace the fuel pump.

NOTE

○*It may take a long time to turn on the test light in case that the fuel reserve switch is inspected just after the fuel is drawn. Leave the fuel pump lead connector with leads for inspection connected for few minutes.*

Switches and Sensors

Gear Position Sensor Removal



- Remove:
  Rear Intake Duct (see Intake Duct Removal in the Frame chapter)
  Engine Sprocket Cover (see Engine Sprocket Removal in the Final Drive chapter)
- Disconnect the gear position sensor connector [A].

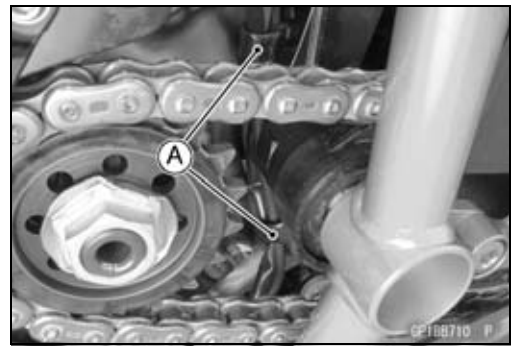

- Open the clamps [A] to clear the gear position sensor harness.

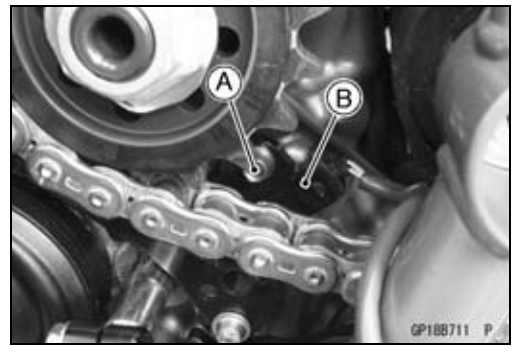

- Remove:
  Gear Position Sensor Bolt [A]
  Gear Position Sensor [B]

Gear Position Sensor Installation

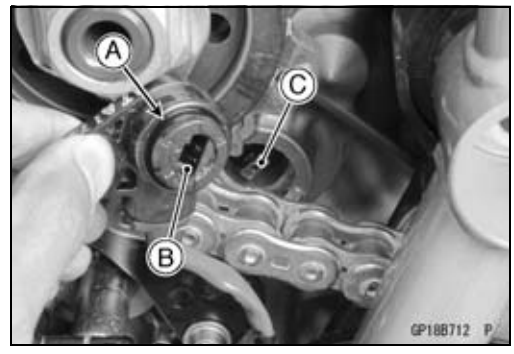

- Replace the O-ring [A] with a new one.
- Apply grease to the new O-ring.
- Install the gear position sensor so that the slit [B] fits to the projection [C] on the shift drum.
- Tighten:

Torque - Gear Position Sensor Bolt: 10 N·m (1.0 kgf·m, 89 in·lb)

○When installing the sensor which is fastened by bolt, tighten the bolt after placing the sensor on the bottom surface completely.

- Run the leads correctly (see Cable, Wire, and Hose Routing section in the Appendix chapter).
- Install the removed parts (see appropriate chapters).

Gear Position Sensor Inspection

- Refer to the Gear Position Sensor Output Voltage Inspection in the Self-Diagnosis System chapter.

Relay Box

The relay box [A] has relays and diodes. The relays and diodes can not be removed.



Relay Box Removal

NOTICE
Never drop the relay box especially on a hard surface. **Such a shock to the relay box can damage it.**

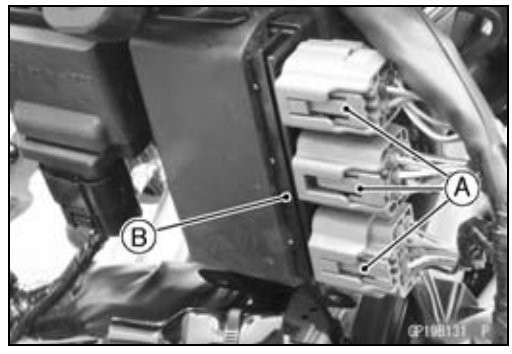

- Remove the upper fairing (see Upper Fairing Removal).
- Disconnect:
  Connectors [A]
- Remove:
  Relay Box [B]

Relay Circuit Inspection

- Remove the relay box (see Relay Box Removal).
- Check conductivity of the following numbered terminals by connecting a tester and one 12 V battery to the relay box as shown (see Relay Box Internal Circuit in this section).

★If the tester does not read as specified, replace the relay box.

Relay Circuit Inspection (with the battery disconnected)

	Tester Connection	Tester Reading (Ω)
Headlight Circuit Relay	1-3	∞
ECU Main Relay	7-6	∞
	4-5	Not ∞*
Fuel Pump Relay	7-8	∞
	9-10	Not ∞*
Starter Circuit Relay	11-16	∞
	11-12	∞
Fan Relay	17-20	∞
	18-19	Not ∞*

*: The actual reading varies with the tester used.

Relay Box

Relay Circuit Inspection (with the battery connected)

	Battery Connection (+) (–)	Tester Connection	Tester Reading (Ω)
Headlight Relay	2-11	1-3	0
ECU Main Relay	4-5	7-6	0
Fuel Pump Relay	9-10	7-8	0
Fan Relay	18-19	17-20	0

	Battery Connection (+) (–)	Tester Connection (+) (–)	Tester Reading (V)
Starter Circuit Relay	16-12	11-12	Battery Voltage

(+): Apply positive lead.
(–): Apply negative lead.

Diode Circuit Inspection

- Remove the relay box (see Relay Box Removal).
- Check conductivity of the following pairs of terminals (see Relay Box Internal Circuit in this section).

Diode Circuit Inspection

Tester Connection	1-11, 2-11, 12-13, 12-15, 12-16, 13-14, 13-15

★The resistance should be low in one direction and more than 10 times as much in the other direction. If any diode shows low or high in both directions, the diode is defective and the relay box must be replaced.

NOTE

○*The actual meter reading varies with the meter or tester used and the individual diodes, but generally speaking, the lower reading should be from zero to one half the scale.*

Relay Box

Relay Box Internal Circuit

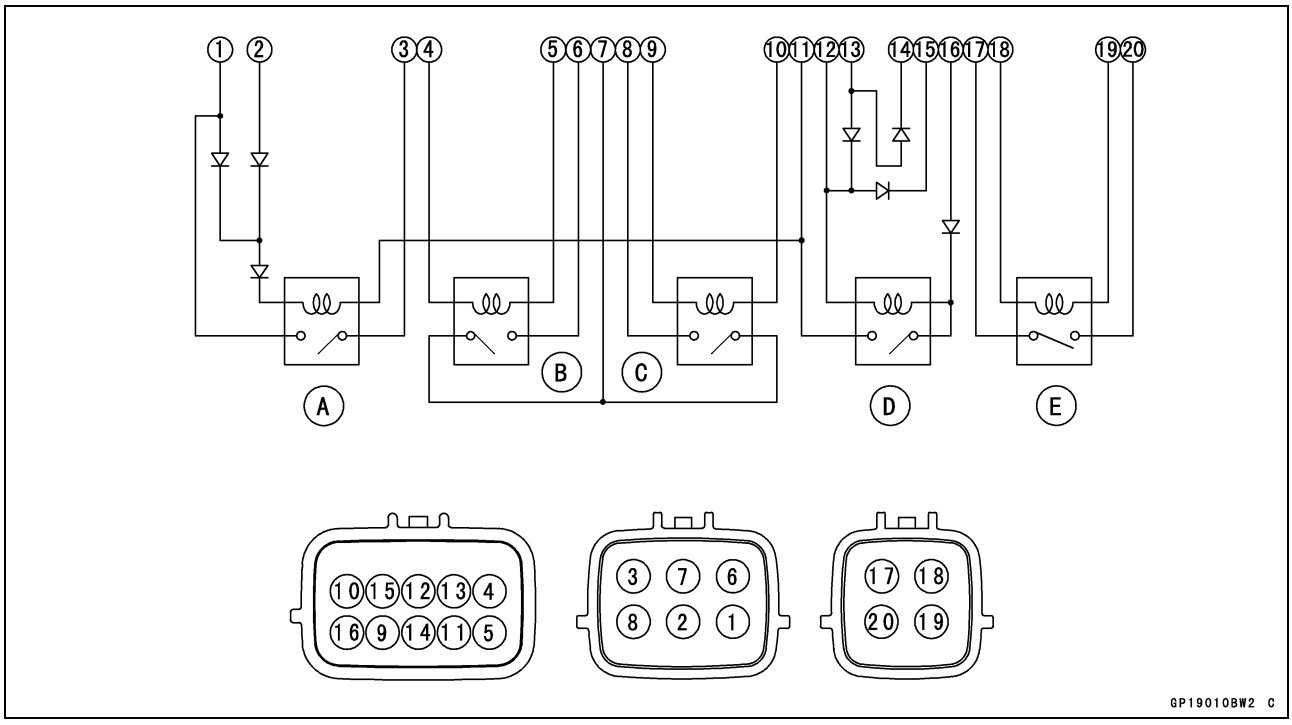

A: Headlight Circuit Relay
B: ECU Main Relay
C: Fuel Pump Relay
D: Starter Circuit Relay
E: Fan Relay

Fuse

30 A Main/15 A ECU Fuse Removal

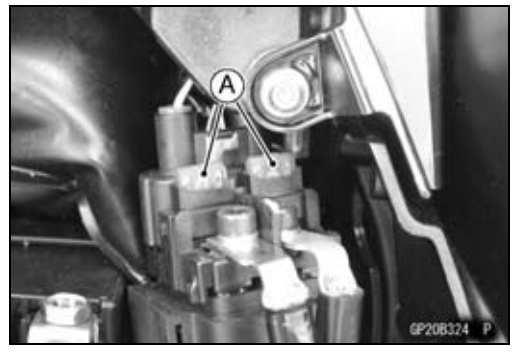

- Remove:
  Starter Relay Cover (see Starter Relay Inspection)
- Pull out the fuses [A] from the starter relay with needle nose pliers.

Fuse Box Fuse Removal

Fuse Box (1)

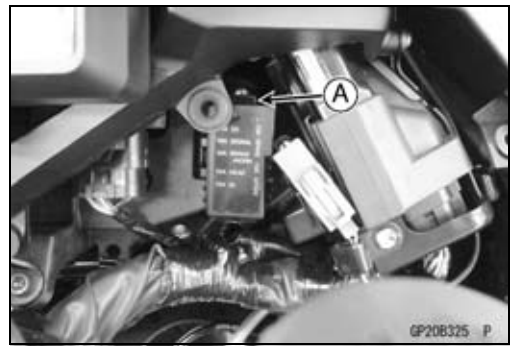

- Remove:
  Right Inner Cover (see Inner Cover Removal in the Frame chapter)
- Unlock the hook [A] to lift up the lid.

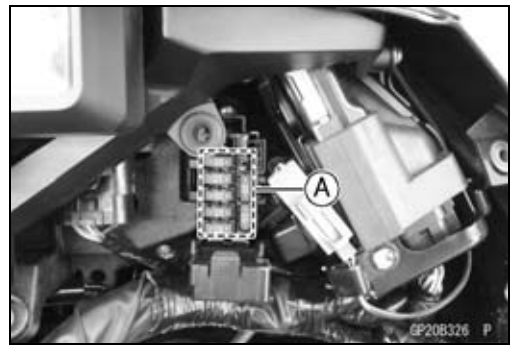

- Pull the fuses [A] straight out of the fuse box with needle nose pliers.

Fuse Box (2)

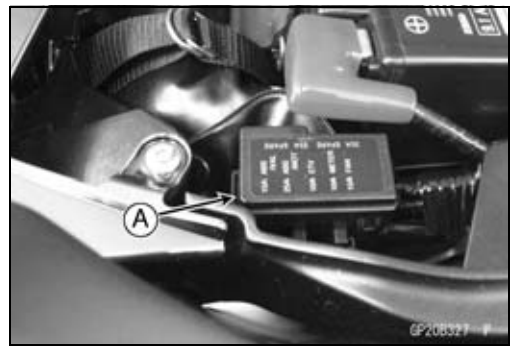

- Remove:
  Seat (see Seat Removal in the Frame chapter)
- Unlock the hook [A] to lift up the lid.

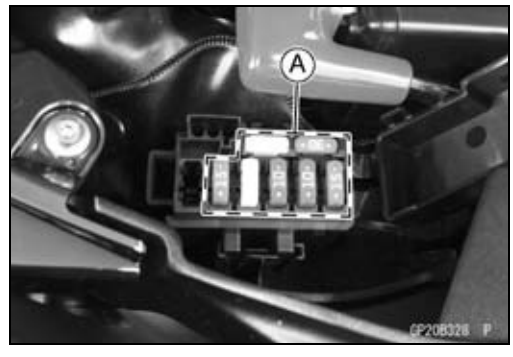

- Pull the fuses [A] straight out of the fuse box with needle nose pliers.

Fuse

Fuse Installation

★If a fuse fails during operation, inspect the electrical system to determine the cause, and then replace it with a new fuse of proper amperage.

- Install the fuse box fuses on the original position as specified on the lid.

Fuse Inspection

- Remove the fuse (see 30 A Main/15 A ECU/Fuse Box Fuse Removal).
- Inspect the fuse element.

★If it is blown out, replace the fuse. Before replacing a blown fuse, always check the amperage in the affected circuit. If the amperage is equal to or greater than the fuse rating, check the wiring and related components for a short circuit.

Housing [A]
Fuse Element [B]
Terminals [C]
Blown Element [D]

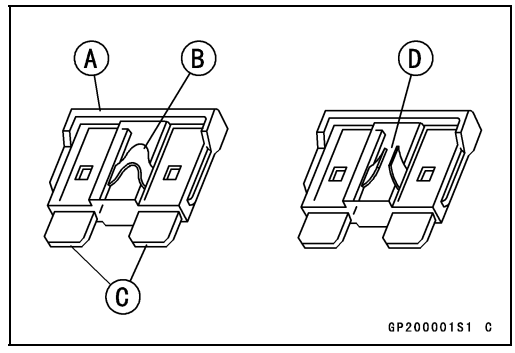

NOTICE

When replacing a fuse, be sure the new fuse matches the specified fuse rating for that circuit. Installation of a fuse with a higher rating may cause damage to wiring and components.

Self-Diagnosis System

Table of Contents

Specifications 17-5
Special Tools 17-7
Self-Diagnosis 17-8
  Self-Diagnosis Outline 17-8
  Self-Diagnosis Procedures 17-9
  Service Code Reading 17-12
  Service Code Erasing 17-12
  Backups 17-15
Throttle Position Sensor (Service Code 11) (DTC P0120, P0121, P0122, P0220, P0223) 17-23
  Throttle Position Sensor Removal 17-23
  Throttle Position Sensor Input Voltage Inspection 17-23
  Throttle Position Sensor Output Voltage Inspection 17-24
Intake Air Pressure Sensor (Service Code 12) (DTC P0105, P0107) 17-26
  Intake Air Pressure Sensor Removal 17-26
  Intake Air Pressure Sensor Installation 17-26
  Intake Air Pressure Sensor Input Voltage Inspection 17-27
  Intake Air Pressure Sensor Output Voltage Inspection 17-28
Intake Air Temperature Sensor (Service Code 13) (DTC P0110, P0112) 17-32
  Air Intake Chamber Pressure/Temperature Sensor Removal 17-32
  Air Intake Chamber Pressure/Temperature Sensor Installation 17-32
  Intake Air Temperature Sensor Output Voltage Inspection 17-33
  Intake Air Temperature Sensor Resistance Inspection 17-34
Water Temperature Sensor (Service Code 14) (DTC P0115, P0117) 17-35
  Water Temperature Sensor Removal/Installation 17-35
  Water Temperature Sensor Output Voltage Inspection 17-36
  Water Temperature Sensor Resistance Inspection 17-37
Atmospheric Pressure Sensor (Service Code 15) (DTC P2226, P2228) 17-38
  Atmospheric Pressure Sensor Removal 17-38
  Atmospheric Pressure Sensor Installation 17-38
  Atmospheric Pressure Sensor Input Voltage Inspection 17-39
  Atmospheric Pressure Sensor Output Voltage Inspection 17-40
Accelerator Position Sensor (Service Code 18) (DTC P2120, P2121, P2123, P2125, P2128) 17-44
  Accelerator Position Sensor Removal 17-44
  Accelerator Position Sensor Input Voltage Inspection 17-44
  Accelerator Position Sensor Output Voltage Inspection 17-45
  Accelerator Position Sensor Resistance Inspection 17-46
ABS Hydraulic Unit Communication Error (Service Code 1B) 17-48
  ABS Hydraulic Unit Communication Line Inspection 17-48
Crankshaft Sensor (Service Code 21) (DTC P0335) 17-50
  Crankshaft Sensor Removal/Installation 17-50
  Crankshaft Sensor Resistance Inspection 17-50
  Crankshaft Sensor Peak Voltage Inspection 17-50
Camshaft Position Sensor (Service Code 23) (DTC P0340) 17-51
  Camshaft Position Sensor Removal/Installation 17-51
  Camshaft Position Sensor Resistance Inspection 17-51
  Camshaft Position Sensor Peak Voltage Inspection 17-51
Rear Wheel Rotation Sensor Signal (Service Code 24) (DTC P2158) 17-53
  Rear Wheel Rotation Sensor Signal Inspection 17-53
Gear Position Sensor (Service Code 25) (DTC P0914, P0917) 17-55

Gear Position Sensor Removal/Installation 17-55
Gear Position Sensor Input Voltage Inspection 17-55
Gear Position Sensor Output Voltage Inspection 17-56
Front Wheel Rotation Sensor Signal (Service Code 27) (DTC P0500) 17-58
Front Wheel Rotation Sensor Signal Inspection 17-58
Vehicle-down Sensor (Service Code 31) (DTC C0064) 17-60
Vehicle-down Sensor Removal 17-60
Vehicle-down Sensor Installation 17-60
Vehicle-down Sensor Input Voltage Inspection 17-61
Vehicle-down Sensor Output Voltage Inspection 17-62
Oxygen Sensor - not activated (Service Code 33) (DTC P0130, P0132) 17-65
Oxygen Sensor Removal/Installation 17-65
Oxygen Sensor Inspection 17-65
Exhaust Butterfly Valve Actuator Sensor (Service Code 34) (DTC P048B, P048E) 17-68
Exhaust Butterfly Valve Actuator Sensor Removal/Installation 17-68
Exhaust Butterfly Valve Actuator Sensor Input Voltage Inspection 17-68
Exhaust Butterfly Valve Actuator Sensor Output Voltage Inspection 17-69
Exhaust Butterfly Valve Actuator Sensor Resistance Inspection 17-70
Immobilizer Amplifier (Service Code 35, Equipped Models) 17-71
Antenna Resistance Inspection 17-71
Amplifier Input Voltage Inspection 17-71
Blank Key Detection (Service Code 36, Equipped Models) 17-72
Ignition Key Inspection 17-72
ECU Communication Error (Service Code 39) (DTC U0001) 17-73
ECU Communication Line Inspection 17-73
Purge Valve (Service Code 3A, Other than US and CA Models) (DTC P0443) 17-75
Purge Valve Removal/Installation 17-75
Purge Valve Inspection 17-75
ESD ECU Communication Error (Service Code 3C) 17-77
ESD ECU Communication Line Inspection 17-77
Quick Shifter Sensor (Service Code 3E) (DTC P0826) 17-79
Quick Shifter Sensor Removal/Installation 17-79
Quick Shifter Sensor Input Voltage Inspection 17-79
Quick Shifter Sensor Output Voltage Inspection 17-80
Quick Shifter Sensor Resistance Inspection 17-81
Primary Fuel Injectors #1, #2, #3, #4 (Service Code 41, 42, 43, 44) (DTC P0201, P0202, P0203, P0204) 17-82
Primary Fuel Injector Removal/Installation 17-82
Primary Fuel Injector Audible Inspection 17-82
Primary Fuel Injector Resistance Inspection 17-82
Primary Fuel Injector Power Source Voltage Inspection 17-83
Primary Fuel Injector Output Voltage Inspection 17-84
Primary Fuel Injector Fuel Line Inspection 17-86
Fuel Pump Relay (Service Code 46) (DTC P0627) 17-88
Fuel Pump Relay Removal/Installation 17-88
Fuel Pump Relay Inspection 17-88
Return Spring (Service Code 49) (DTC P2119) 17-89
Return Spring Removal 17-89
Return Spring Inspection 17-89
Secondary Fuel Injectors #1, #2, #3, #4 (Service Code 4A, 4B, 4C, 4D) (DTC P0205, P0206, P0207, P0208) 17-90
Secondary Fuel Injector Removal/Installation 17-90
Secondary Fuel Injector Resistance Inspection 17-90
Secondary Fuel Injector Power Source Voltage Inspection 17-91
Secondary Fuel Injector Output Voltage Inspection 17-92
Secondary Fuel Injector Fuel Line Inspection 17-93

Stick Coils #1, #2, #3, #4 (Service Code 51, 52, 53, 54) (DTC P0351, P0352, P0353, P0354) 17-95
Stick Coil Removal/Installation 17-95
Stick Coil Primary Winding Resistance Inspection 17-95
Stick Coil Input Voltage Inspection 17-95
Radiator Fan Relay (Service Code 56) (DTC P0480) 17-97
Radiator Fan Relay Removal/Installation 17-97
Radiator Fan Relay Inspection 17-97
ETV Actuator (Service Code 58) (DTC P2100) 17-99
ETV Actuator Removal 17-99
ETV Actuator Input Voltage Inspection 17-99
ETV Actuator Relay Inspection 17-99
Exhaust Butterfly Valve Actuator (Service Code 63) (DTC P0475) 17-101
Exhaust Butterfly Valve Actuator Removal 17-101
Exhaust Butterfly Valve Actuator Installation 17-101
Exhaust Butterfly Valve Actuator Inspection 17-101
Exhaust Butterfly Valve Actuator Resistance Inspection 17-101
Air Switching Valve (Service Code 64) (DTC P0410) 17-103
Air Switching Valve Removal/Installation 17-103
Air Switching Valve Inspection 17-103
Oxygen Sensor Heater (Service Code 67) (DTC P0030) 17-104
Oxygen Sensor Heater Removal/Installation 17-104
Oxygen Sensor Heater Resistance Inspection 17-104
Oxygen Sensor Heater Power Source Voltage Inspection 17-105
Knock Sensor (Service Code 69) (DTC P0325) 17-107
Knock Sensor Removal 17-107
Knock Sensor Installation 17-107
Knock Sensor Resistance Inspection 17-107
Purge Valve (for Supercharger) (Service Code 6A) (DTC P0045) 17-109
Purge Valve (for Supercharger) Removal/Installation 17-109
Purge Valve (for Supercharger) Inspection 17-109
Air Intake Chamber Pressure Sensor (Service Code 7E) (DTC P0235, P0237) 17-111
Air Intake Chamber Pressure/Temperature Sensor Removal 17-111
Air Intake Chamber Pressure/Temperature Sensor Installation 17-111
Air Intake Chamber Pressure Sensor Input Voltage Inspection 17-112
Air Intake Chamber Pressure Sensor Output Voltage Inspection 17-113
Fuel Supply System (Service Code 94) (DTC P0170) 17-115
Fuel Supply System Inspection 17-115
Battery Voltage (Service Code 97) (DTC P0562) 17-116
Battery Voltage Inspection 17-116
ETV Control Circuit (Service Code 98) (DTC P0607) 17-117
ETV Control Circuit Inspection 17-117
ESD Actuator Error (Service Code E2E) 17-118
ESD Actuator Removal 17-118
ESD Actuator Installation 17-118
ESD Actuator Resistance Inspection 17-118
ESD Actuator Input Voltage Inspection 17-119
ESD ECU Error (Service Code E3B) 17-121
ESD ECU Removal 17-121
ESD ECU Installation 17-121
ESD ECU Power Supply Inspection 17-121
ESD Calibration Error (Service Code E3F) 17-124
IMU (Inertial Measurement Unit) (Service Code E8E) 17-125
IMU Removal 17-125
IMU Installation 17-125
IMU Power Supply Inspection 17-125
IMU (Inertial Measurement Unit) Communication Error (Service Code E8F) 17-127

IMU Communication Line Inspection 17-127
ABS Service Codes 17-129
Solenoid Valve Inspection (Service Code B13, B14, B17, B18) 17-129
ABS Solenoid Valve Relay Inspection (Service Code B19) 17-129
Front, Rear Wheel Rotation Difference Abnormal Inspection (Service Code B25) 17-129
ABS Motor Relay Inspection (Service Code B35) 17-129
Front Wheel Rotation Sensor Signal Abnormal (Service Code B42) 17-130
Front Wheel Rotation Sensor Wiring Inspection (Service Code B43) 17-131
Rear Wheel Rotation Sensor Signal Abnormal (Service Code B44) 17-131
Rear Wheel Rotation Sensor Wiring Inspection (Service Code B45) 17-132
Power Supply Voltage Inspection (Low-Voltage) (Service Code B52) 17-133
Power Supply Voltage Inspection (Over-Voltage) (Service Code B53) 17-133
ECU Inspection (Service Code B55) 17-133
CAN Communication (Transmission)/CAN Bus OFF Monitor Inspection (Service Code B57) CAN Communication (Reception) Monitor Inspection (Service Code B58) 17-133
ECU Communication Line Inspection (Service Code B62) 17-134
IMU Communication Line Inspection (Service Code B63) 17-135
Output Fluid Pressure Sensor (Front Brake) Wiring Inspection (Service Code B83) 17-135
Output Fluid Pressure Sensor (Front Brake) Offset Abnormal (Service Code B84) 17-135
Fluid Pressure Sensor Supply Voltage Inspection (Service Code B89) 17-136
IMU Inspection (Service Code B94) 17-136

Specifications

Item	Standard
Digital Fuel Injection System	
Throttle Position Sensor:	
Input Voltage	DC 4.75 ~ 5.25 V
Output Voltage (1)	DC 2.30 ~ 2.70 V at full throttle opening (for reference)
Output Voltage (2)	DC 2.30 ~ 2.70 V at full throttle opening (for reference)
Intake Air Pressure Sensor/Atmospheric Pressure Sensor:	
Input Voltage	DC 4.75 ~ 5.25 V
Output Voltage	DC 1.43 ~ 1.55 V at standard atmospheric pressure (101.32 kPa, 76 cmHg)
Intake Air Temperature Sensor:	
Output Voltage	About DC 2.50 ~ 3.00 V @20°C (68°F)
Resistance	5.4 ~ 6.6 kΩ @0°C (32°F) 0.29 ~ 0.39 kΩ @80°C (176°F)
Water Temperature Sensor:	
Output Voltage	About DC 2.80 ~ 2.97 V @20°C (68°F)
Accelerator Position Sensor:	
Input Voltage	DC 4.75 ~ 5.25 V
Output Voltage (1)	DC 0.50 ~ 0.90 V at ordinary throttle position
Output Voltage (2)	DC 0.35 ~ 1.00 V at ordinary throttle position
Resistance	4.5 ~ 6.5 kΩ
Gear Position Sensor:	
Input Voltage	DC 4.75 ~ 5.25 V
Output Voltage	In the text
Vehicle-down Sensor:	
Input Voltage	DC 4.75 ~ 5.25 V
Output Voltage	With sensor tilted 60 ~ 70° or more right or left: DC 0.65 ~ 1.35 V With sensor arrow mark pointed up: DC 3.55 ~ 4.45 V
Oxygen Sensor:	
Output Voltage (Rich)	DC 0.8 V or more
Output Voltage (Lean)	DC 0.24 V or less
Heater Resistance	13 ~ 17 Ω @20°C (68°F)
Exhaust Butterfly Valve Actuator Sensor:	
Input Voltage	DC 4.75 ~ 5.25 V
Output Voltage	DC 3.46 ~ 3.76 V at pulley original position
Resistance	4 ~ 6 kΩ
Immobilizer Antenna (Equipped Models):	
Resistance	About 3.0 ~ 4.6 Ω

Specifications

Item	Standard
CAN Communication Line:	
Resistance	123 ~ 125 Ω at ECU connector
Primary Fuel Injectors:	
Type	EAT803 (US, CA) EAT816
Nozzle Type	Fine atomizing type with 12 holes (US, CA) Fine atomizing type with 4 holes
Resistance	About 11.7 ~ 12.3 Ω @20°C (68°F)
Secondary Fuel Injectors:	
Type	EAT816
Nozzle Type	Fine atomizing type with 4 holes
Resistance	About 11.7 ~ 12.3 Ω @20°C (68°F)
ETV Actuator:	
Input Voltage	About DC 1 ~ 2 V or –1 ~ –2 V
Exhaust Butterfly Valve Actuator:	
Resistance	5 ~ 200 Ω (for reference)
Knock Sensor:	
Resistance	504 ~ 616 kΩ
Purge Valve (Other than US, CA Models):	
Resistance	22 ~ 26 Ω @20°C (68°F)
Quick Shifter Sensor:	
Input Voltage	DC 4.75 ~ 5.25 V
Output Voltage	DC 0.35 ~ 4.65 V
Resistance	209 ~ 231 kΩ
Purge Valve (for Supercharger):	
Resistance	22 ~ 26 Ω @20°C (68°F)
Air Intake Chamber Pressure Sensor:	
Input Voltage	DC 4.75 ~ 5.25 V
Output Voltage	DC 1.43 ~ 1.55 V at standard atmospheric pressure (101.32 kPa, 76 cmHg)
ESD Actuator:	
Input Voltage	About DC 9 ~ 11 V and then 0.1 V or About DC 9 ~ 11 V
Resistance	About 23 ~ 29 Ω
IMU:	
Input Voltage	Battery Voltage
ABS	
ABS Hydraulic Unit:	
Make	BOSCH
Wheel Rotation Sensor Air Gap	0.4 ~ 1.6 mm (0.02 ~ 0.06 in.)
CAN Communication Line Resistance	30 ~ 70 Ω
CAN Communication Line/Ground Resistance	4 ~ 30 kΩ

Special Tools

Fork Oil Level Gauge:
57001-1290

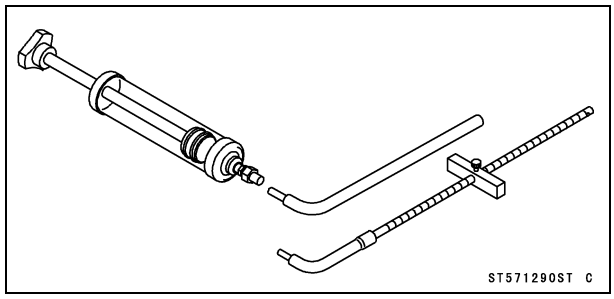

Peak Voltage Adapter:
57001-1415

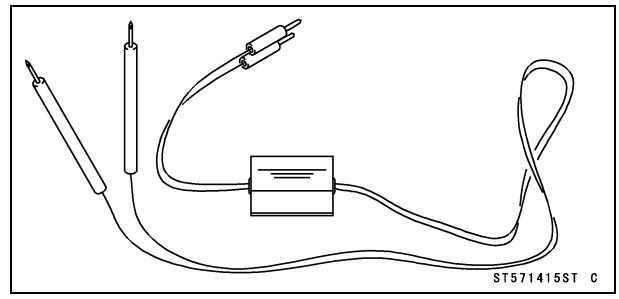

Vacuum Gauge:
57001-1369

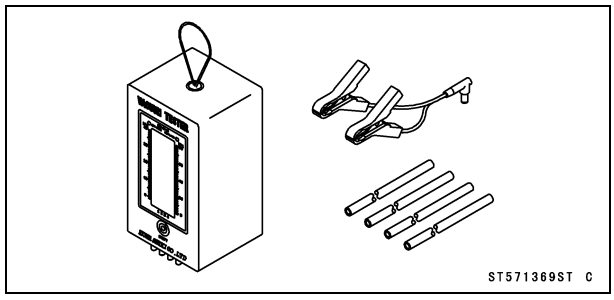

Needle Adapter Set:
57001-1457

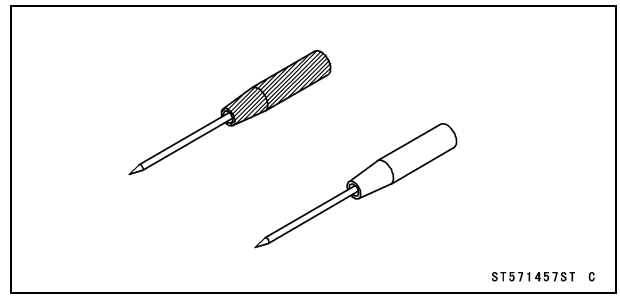

Throttle Sensor Setting Adapter #1:
57001-1400

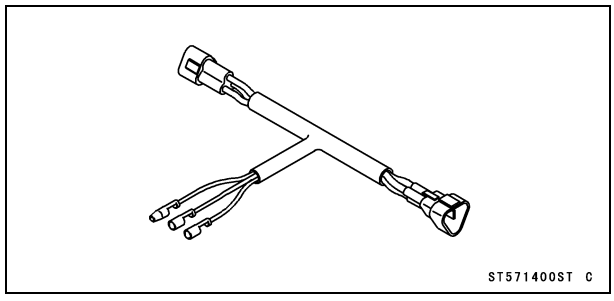

Measuring Adapter:
57001-1700

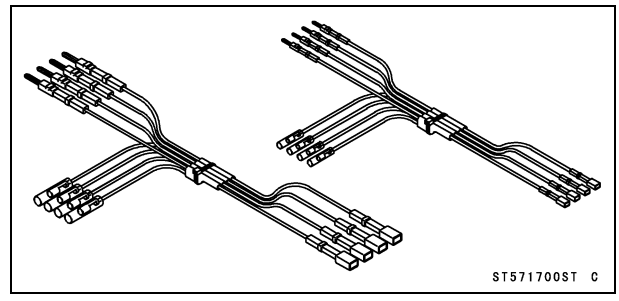

Self-Diagnosis

Self-Diagnosis Outline

The self-diagnosis system is monitoring the following mechanism.

DFI System and Ignition System
KTRC System
KEBC System
KQS System
KLCM System
Rain Mode System
KIBS and ABS
IMU
ESD System
Immobilizer System (Equipped Models)

The following indicator lights (LED) are used for symbols of below table.

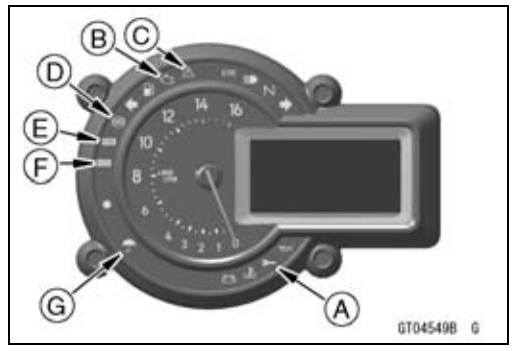

LED Color	Warning Indicators
Red [A]	Immobilizer (Equipped Models)
Yellow [B]	FI
Yellow [C]	KTRC
	KEBC
	KQS
	KLCM
	Rain Mode
	KIBS
	IMU
	ESD
Yellow [D]	ABS
White [E]	KIBS
White [F]	ESD
White [G]	Rain

The self-diagnosis system has two modes and can be switched to another mode by operating the upper and lower buttons on the left switch housing.

User Mode

The ECU notifies the rider of troubles in DFI system, ignition system, KTRC system, KEBC system KQS system, KLCM system, Rain mode system and immobilizer system (equipped models) by lighting or blinking the yellow engine warning indicator light (LED) [A], yellow warning indicator light (LED) [B], KEBC indicator [C], KQS indicator [D], IMU indicator [E], white rain mode indicator light (LED) [F] and red immobilizer warning indicator light (LED) [G] when DFI, ignition, KTRC, KEBC, KQS, KLCM , Rain mode and immobilizer system parts or IMU are faulty, and initiates fail-safe function. In case of serious troubles, ECU stops the injection and ignition operation.

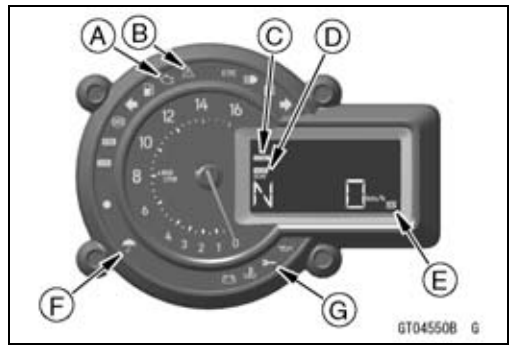

Self-Diagnosis

The ECU notifies the rider of troubles in ESD system by lighting or blinking the yellow warning indicator light (LED) [A] and white ESD indicator light (LED) [B] when ESD system parts are faulty, and initiates fail-safe function.

For models equipped with ABS, the ABS hydraulic unit notifies the rider of troubles in this system by lighting or blinking the yellow warning indicator light (LED), yellow ABS indicator light (LED) [C] and white KIBS indicator light (LED) [D] when ABS parts are faulty, and initiates fail-safe function.

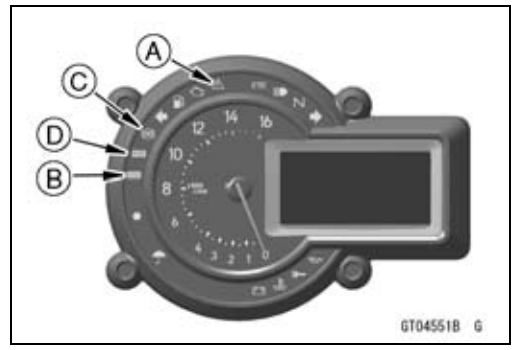

Dealer Mode

The LCD displays the service code(s) [A] to show the problem(s) which the above system has at the moment of diagnosis.

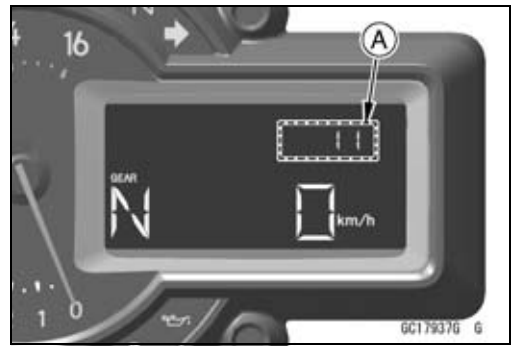

Self-Diagnosis Procedures

NOTE

○*Use a fully charged battery when conducting self-diagnosis. Otherwise, the indicator light (LED) and indicator do not light or blink.*

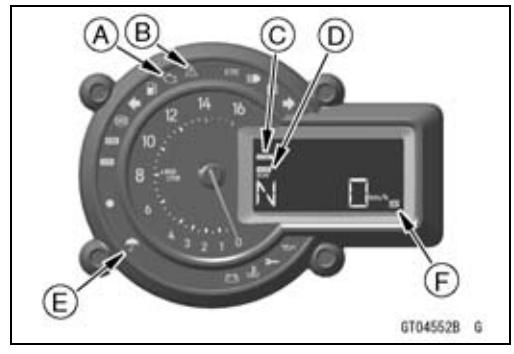

● Turn the ignition switch on and start the engine.

○When a problem occurs with DFI system and ignition system, the yellow engine warning indicator light (LED) [A] stays on after starting the engine to alert the rider.

○When a problem occurs with KTRC system, KEBC system, KQS system, KLCM system and Rain mode system, the yellow warning indicator light (LED) [B] goes on, and the KEBC indicator [C], KQS indicator [D] or white rain mode indicator light (LED) [E] blink.

○When a problem occurs with IMU, the yellow warning indicator light (LED) goes on and the IMU indicator [F] blinks.

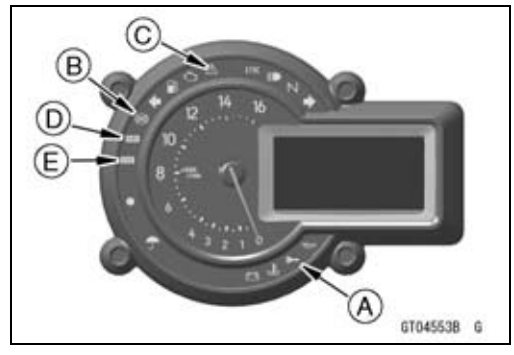

○When a problem occurs with immobilizer system (equipped models), the red immobilizer warning indicator light (LED) [A] blinks.

○When a problem occurs with ABS system, the yellow ABS indicator light (LED) [B] goes on or the yellow warning indicator light (LED) [C] goes on and white KIBS indicator light (LED) [D] blinks. However, when the yellow ABS indicator light (LED) goes off after the motorcycle runs at approx. 5 km/h (3.1 mph) or above, the ABS is normal.

○When a problem occurs with CAN communication line between the ABS hydraulic unit and the meter unit, the yellow ABS indicator light (LED) goes on and the white KIBS indicator light (LED) blinks.

○When a problem occurs with ESD system, the yellow warning indicator light (LED) goes on and white ESD indicator light (LED) [E] blinks.

Self-Diagnosis

● Push the upper button [A] or lower button [B] to display the odometer.
● Push and hold the upper button and lower button.

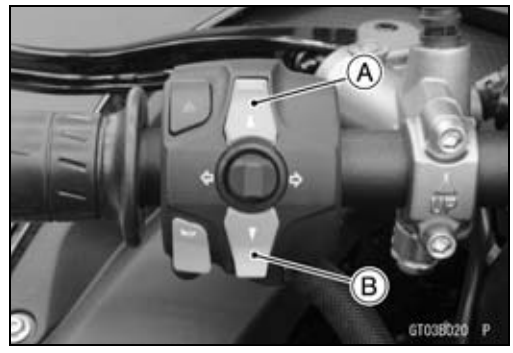

● The service code [A] is displayed on the LCD.

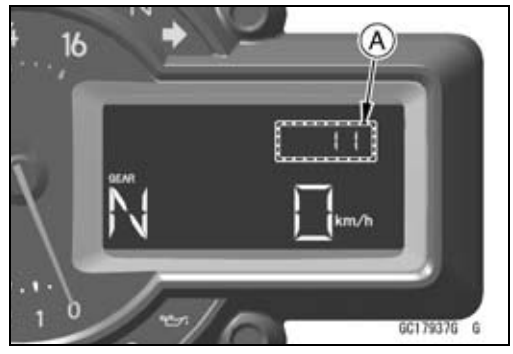

● Any of the following procedures ends self-diagnosis.
○When the service code is displayed on the LCD, push and hold the upper button and lower button.
○When the ignition switch is turned off.

Self-Diagnosis

Self-Diagnosis Flow Chart

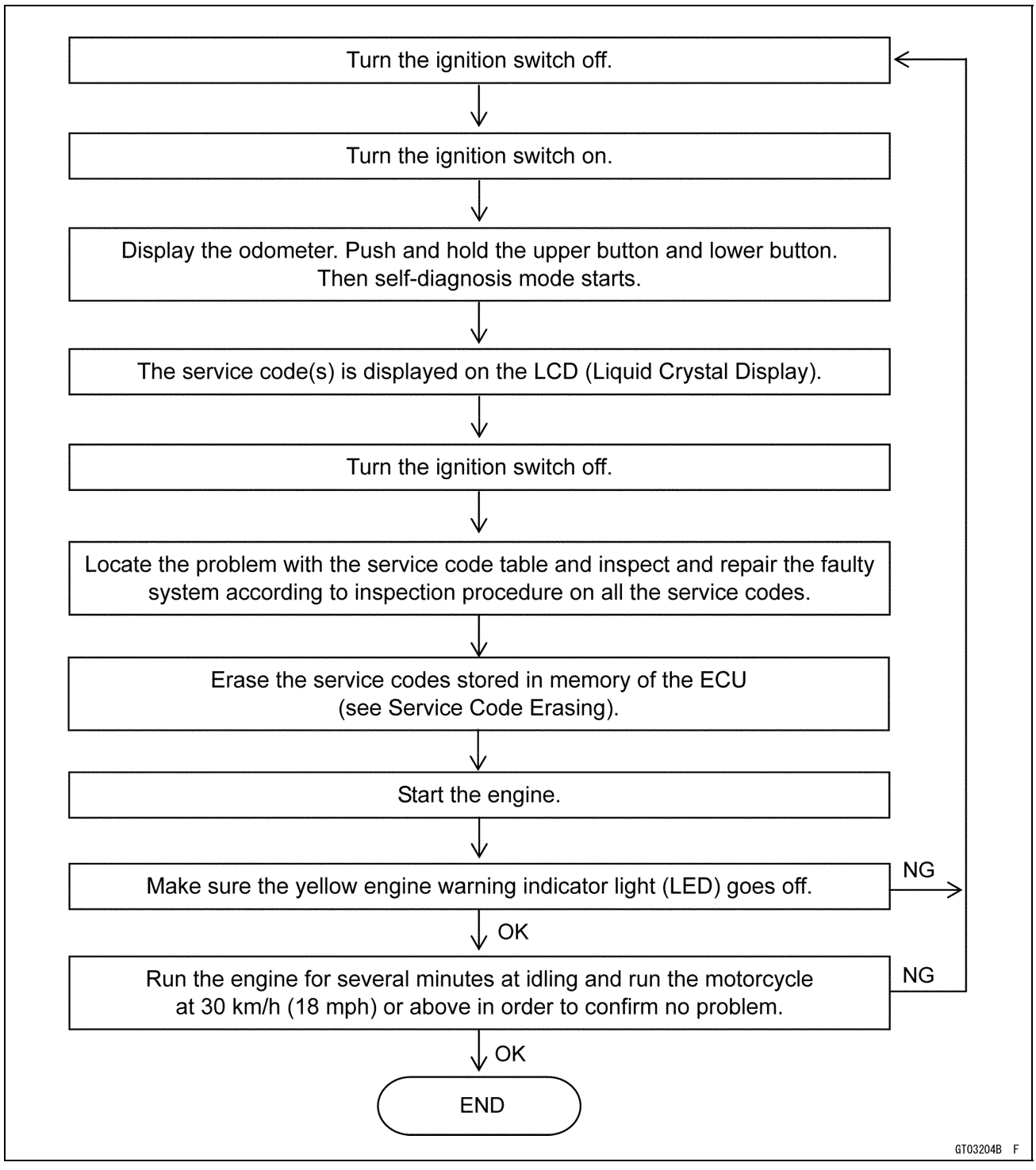

Self-Diagnosis

Service Code Reading

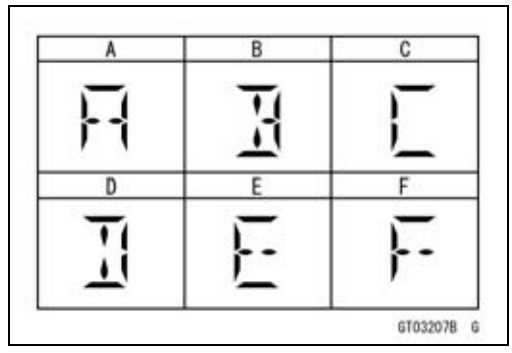

○The service code(s) is displayed on the LCD by the two or three numbers or letters.

NOTE

○*The LCD displays the alphabet of the service code as shown.*
○*The service code of the ABS adds "B" at the left side of the code.*
○*The service code of the ESD and IMU adds "E" at the left side of the code.*

○For DFI system, immobilizer system (equipped models) and ESD system, when there are two or more problems, all the service codes can be stored and the display will begin starting from the lowest number service code in the numerical order.
○For ABS, the service codes display at random.
○Then after completing all codes, the display is repeated until the ignition switch is turned off or push and hold the upper button and lower button.
○The order of the system's appearing is the order of DFI system, immobilizer system (equipped models), IMU, ABS, and ESD system.

○For example, if three problems occurred in the order of 46, 11, 31, the service codes are displayed (each two seconds) from the lowest number in the order listed as shown.
○Pushing the upper button while displaying the service codes, the LCD displays the next service code.

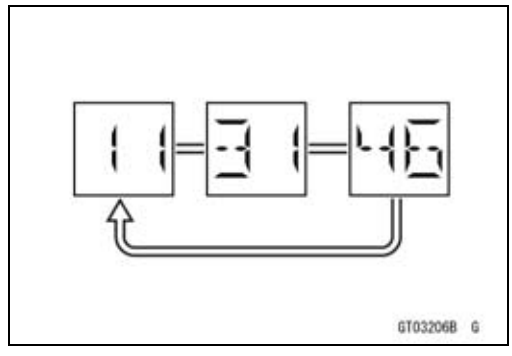

Service Code Erasing

● The service codes stored in memory of the ECU can be erased using Kawasaki Diagnostic System (KDS Ver.3).

NOTE

○*When erasing the stored service code memory, the accelerator position and throttle position initial data of the throttle body are erased. Therefore, you must register the initial data to the ECU. Wait the 10 seconds at the idle speed and the coolant temperature 40°C (104°F) or more to register the initial data of the sensor position to the ECU.*

★If the Kawasaki Diagnostic System (KDS Ver.3) is not available, do the following procedures.

1. Turn on the ignition switch and start the engine.
2. Keep the idling speed more than 30 seconds.
3. Run the vehicle more than 5 minutes at a speed of 40 km/h (25 mph) or more.
   Be sure to keep the engine running during procedures 2 and 3 for more than 10 minutes in total.
4. Turn the ignition switch off.
5. Repeat the above procedures 3 times.
6. Start the engine and check that the yellow engine warning indicator light (LED) goes off.

Service Code Table

○The service codes of the immobilizer system appear to system equipped models.

Self-Diagnosis

Service Code	DTC (Diagnostic Trouble Code)	System	Problems
11	P0120	ETV	Throttle position sensor malfunction, wiring open or short
	P0121		
	P0122		
	P0220		
	P0223		
12	P0105	FI	Intake air pressure sensor #1 malfunction, wiring open or short
	P0107		
13	P0110	FI	Intake air temperature sensor malfunction, wiring open or short
	P0112		
14	P0115	FI	Water temperature sensor malfunction, wiring open or short
	P0117		
15	P2226	FI	Atmospheric pressure sensor malfunction, wiring open or short
	P2228		
18	P2120	ETV	Accelerator position sensor malfunction, wiring open or short
	P2121		
	P2123		
	P2125		
	P2128		
1B	–	ABS	ABS hydraulic unit communication error (Equipped Models)
21	P0335	FI	Crankshaft sensor malfunction, wiring open or short
23	P0340	FI	Camshaft sensor malfunction, wiring open or short
24	P2158	FI	Rear wheel rotation sensor signal abnormal (sensor or rotor missing, too large clearance, rotor tooth worn or missing, wiring open)
25	P0914	FI	Gear position sensor malfunction, wiring open or short
	P0917		
27	P0500	FI	Front wheel rotation sensor signal abnormal (sensor or rotor missing, too large clearance, rotor tooth worn or missing, wiring open)
31	C0064	FI	Vehicle-down sensor malfunction, wiring open or short
33	P0130	FI	Oxygen sensor inactivation, wiring open or short
	P0132		
34	P048B	FI	Exhaust butterfly valve actuator sensor malfunction, wiring open or short
	P048E		
35	–	Immobilizer	Immobilizer amplifier malfunction (Equipped Models)
36	–	Immobilizer	Blank key detection (Equipped Models)
39	U0001	FI	ECU communication error
3A	P0443	FI	Purge valve malfunction, wiring open or short (Other than US and CA Models)
3C	–	ESD	ESD ECU communication error
3E	P0826	FI	Quick shifter sensor malfunction, wiring open or short
41	P0201	FI	Primary fuel injector #1 malfunction, wiring open or short
42	P0202	FI	Primary fuel injector #2 malfunction, wiring open or short

Self-Diagnosis

Service Code	DTC (Diagnostic Trouble Code)	System	Problems
43	P0203	FI	Primary fuel injector #3 malfunction, wiring open or short
44	P0204	FI	Primary fuel injector #4 malfunction, wiring open or short
46	P0627	FI	Fuel pump relay malfunction, relay is stuck
49	P2119	ETV	Return spring malfunction
4A	P0205	FI	Secondary fuel injector #1 malfunction, wiring open or short
4B	P0206	FI	Secondary fuel injector #2 malfunction, wiring open or short
4C	P0207	FI	Secondary fuel injector #3 malfunction, wiring open or short
4D	P0208	FI	Secondary fuel injector #4 malfunction, wiring open or short
51	P0351	FI	Stick coil #1 malfunction, wiring open or short
52	P0352	FI	Stick coil #2 malfunction, wiring open or short
53	P0353	FI	Stick coil #3 malfunction, wiring open or short
54	P0354	FI	Stick coil #4 malfunction, wiring open or short
56	P0480	FI	Radiator fan relay malfunction, wiring open or short
58	P2100	ETV	ETV actuator malfunction, wiring open or short
63	P0475	FI	Exhaust butterfly valve actuator malfunction, wiring open or short
64	P0410	FI	Air switching valve malfunction, wiring open or short
67	P0030	FI	Oxygen sensor heater malfunction, wiring open or short
69	P0325	FI	Knock sensor malfunction, wiring open or short
6A	P0045	FI	Purge valve (for supercharger) malfunction, wiring open or short
7E	P0235	FI	Air intake chamber pressure sensor malfunction, wiring open or short
	P0237		
94	P0170	FI	Fuel supply system trouble
97	P0562	ETV	Battery monitor voltage is low
98	P0607	ETV	ECU/ETV circuit malfunction, wiring open or short
B13	–	ABS	Rear intake solenoid valve trouble (open, temperature abnormal)
B14	–	ABS	Rear outlet solenoid valve trouble (open, temperature abnormal)
B17	–	ABS	Front intake solenoid valve trouble (open, temperature abnormal)
B18	–	ABS	Front outlet solenoid valve trouble (open, temperature abnormal)
B19	–	ABS	ABS solenoid valve relay trouble [wiring shorted or open, stuck relay (ON or OFF) or dropout]
B25	–	ABS	Front, rear wheel rotation difference abnormal (substandard tire, sensor rotor teeth number wrong)
B35	–	ABS	ABS motor relay trouble [wiring shorted or open, stuck relay (ON or OFF)]
B42	–	ABS	Front wheel rotation sensor signal abnormal (sensor or rotor missing, too large clearance, rotor tooth worn or missing)
B43	–	ABS	Front wheel rotation sensor wiring (wiring shorted or open, connector bad connection)

Self-Diagnosis

Service Code	DTC (Diagnostic Trouble Code)	System	Problems
B44	–	ABS	Rear wheel rotation sensor signal abnormal (sensor or rotor missing, too large clearance, rotor tooth worn or missing)
B45	–	ABS	Rear wheel rotation sensor wiring (wiring shorted or open, connector bad connection)
B52	–	ABS	Power supply voltage abnormal (low-voltage)
B53	–	ABS	Power supply voltage abnormal (over-voltage)
B55	–	ABS	ECU trouble (ECU operation abnormal)
B57	–	ABS	CAN communication (transmission)/CAN bus monitor malfunction
B58	–	ABS	CAN communication (reception) monitor malfunction
B62	–	ABS	ABS hydraulic unit - FI ECU communication error
B63	–	ABS	ABS hydraulic unit - IMU communication error
B83	–	ABS	Output fluid pressure sensor (front brake) trouble (voltage abnormal, wiring shorted or open)
B84	–	ABS	Output fluid pressure sensor (front brake) trouble (offset abnormal)
B89	–	ABS	Fluid pressure sensor supply voltage abnormal
B94	–	ABS	IMU malfunction
E2E	–	ESD	ESD actuator malfunction, wiring open or short
E3B	–	ESD	ESD ECU trouble (ESD ECU operation abnormal) ESD ECU - FI ECU communication error Input signals for ESD trouble Low voltage
E3F*	–	ESD	ESD calibration error
E8E	–	FI	IMU malfunction
E8F	–	FI	IMU communication error or wiring open

Some DFI error has an effect on the KTRC, KEBC, KLCM, KQS function.

*: ESD indicator may blink and yellow warning indicator light (LED) may go on when the ignition switch is turned on with the motorcycle moving. If this happens, first turn the ignition switch off, and then back on with the motorcycle completely stopped. The ESD indicator and yellow warning indicator light (LED) should then go off. The ESD indicator may blink and yellow warning indicator light (LED) may light up by a slight movement of the motorcycle depending on the positions of the wheel rotation sensor and the wheel rotation sensor rotor.

Notes:

○The ECU may be involved in these problems. If all the parts and circuits checked out good, be sure to check the ECU for ground and power supply. If the ground and power supply are checked good, replace the ECU.

○When no service code is displayed, the electrical parts of the DFI system has no fault, and the mechanical parts of the DFI system and the engine are suspect.

○DTC (Diagnostic Trouble Code) is displayed on the Kawasaki Diagnostic System (KDS Ver.3) and the Generic Scan Tool (GST).

Backups

○The ECU takes the following measures to prevent engine damage when the DFI, ignition, ETV, ESD or immobilizer system parts have troubles.

Self-Diagnosis

Service Codes	Parts or Function	Output Signal Usable Range or Criteria	Backups by ECU
11	Throttle Position Sensor	Output Voltage (full throttle opening) (1) 4.35 ~ 4.65 V (2) 0.35 ~ 0.65 V	If one of the throttle position sensor 1 or 2 fails (the signal is out of usable range, wiring short or open), the ECU uses the other sensor as throttle position input and set Limp Home Mode (*1). If both throttle position sensor 1 and 2 fail, the ECU stops current to the throttle actuator and set Limp Home Mode (*1). No matter which failure situation is, following three methods are set when failure occurs; 1. The ECU sets the DFI in the D-J method (*2) 2. ECU uses the learned middle position value of the throttle position sensor 1 as a throttle sensor output. 3. Air switching valve solenoid will be on. In addition to these backup, all auxiliary controls (Rain Mode, KTRC, KEBC, KQS, KLCM) will stop.
12	Intake Air Pressure Sensor	Intake Air Pressure (Absolute) Pv = 150 ~ 2 556 mmHg	If the intake air pressure sensor system fails (the signal is out of the usable range, wiring short or open), three methods will be used. 1. The ECU sets the DFI in the α-N method (*3). 2. The ECU sets MP at 760 mmHg. 3. Air switching valve solenoid will be on. In addition to these backup, all auxiliary controls (Rain Mode, KTRC, KEBC, KQS, KLCM) will stop.
13	Intake Air Temperature Sensor	Intake Air Temperature Ta = –30 ~ + 120°C	If the intake air temperature sensor system fails (the signal is out of the usable range, wiring short or open), the ECU sets Ta at 60°C.
14	Water Temperature Sensor	Water Temperature Tw = –30 ~ + 120°C	If the water temperature sensor system fails (the signal is out of the usable range, wiring short or open), the ECU sets Tw at 80°C and the radiator fan operates.
15	Atmospheric Pressure Sensor	Atmospheric Pressure (Absolute) Pa = 150 ~ 2 556 mmHg	If the atmospheric pressure sensor system fails (the signal is out of the usable range, wiring short or open), the ECU sets Pa at 760 mmHg (the standard atmospheric pressure).
18	Accelerator Position Sensor	Output Voltage at Idle (1) 0.65 ~ 0.75 V (2) 0.50 ~ 0.90 V	If accelerator position sensor 1 or 2 fails (the signal is out of usable range, wiring short or open), the ECU sets Limp Home Mode (*1). If both accelerator position sensor 1 and 2 fail (the signal is out of usable range, wiring short or open), the ECU sets Limp Home Mode (*1). When this error happens, the ECU stops all auxiliary controls (Rain Mode, KTRC, KEBC, KQS, KLCM).

Self-Diagnosis

Service Codes	Parts or Function	Output Signal Usable Range or Criteria	Backups by ECU
1B	ABS Hydraulic Unit Communication Line	If a trouble occurred between the ABS hydraulic unit and meter unit, this service code is displayed by the diagnosis of the meter unit.	–
21	Crankshaft Sensor	Crankshaft sensor must send 22 signals to the ECU at the 1 cranking.	If the crankshaft sensor fails, the engine stops by itself. When this error happens, the ECU stops all auxiliary controls (Rain Mode, KTRC, KEBC, KQS, KLCM).
23	Camshaft Position Sensor	Camshaft position sensor must send 1 signal to the ECU at the 2 crankings.	If the camshaft position sensor system fails (the signal is missing, wiring short or open), the ECU continues to ignite cylinders in the same sequence following the last good signal. However, it can not be restarted after the engine was stopped once. When this error happens, the ECU stops all auxiliary controls (Rain Mode, KTRC, KEBC, KQS, KLCM).
24	Rear Wheel Rotation Sensor	Rear wheel rotation sensor must send 50 signals to the ECU at the 1 rotation of the wheel.	If the rear wheel rotation sensor system fails (the signal is missing, wiring open), the ECU stops the KTRC and regards gear position sensor output as internal gear position value. When this error happens, the ECU stops all auxiliary controls (Rain Mode, KTRC, KEBC, KQS, KLCM).
25	Gear Position Sensor	Output Voltage 0.2 ~ 4.8 V	If the gear position sensor system fails (no signal, wiring short or open), the ECU set the internal gear position value for the top (6th). When this error happens, the ECU stops all auxiliary controls (Rain Mode, KTRC, KEBC, KQS, KLCM).
27	Front Wheel Rotation Sensor	Front wheel rotation sensor must send 48 signals to the ECU at the 1 rotation of the wheel.	If the front wheel rotation sensor system fails (the signal is missing, wiring open), the ECU stops the KTRC. When this error happens, the ECU stops all auxiliary controls (Rain Mode, KTRC, KEBC, KQS, KLCM).
31	Vehicle-down Sensor	Output Voltage 0.2 ~ 4.8 V	If the vehicle-down sensor system has failures (the output voltage is out of the usable range, wiring short or open), the ECU shuts off the fuel pump relay.
33	Oxygen Sensor	Output Voltage 0.5 ~ 1.5 V (When Activated, while Idle)	If the oxygen sensor has failures (no signal, wiring short or open) on the terminals, the ECU stops the current to the heater, and it stops the feedback control with the oxygen sensor.

Self-Diagnosis

Service Codes	Parts or Function	Output Signal Usable Range or Criteria	Backups by ECU
34	Exhaust Butterfly Valve Actuator Sensor	Output Voltage 0.2 ~ 4.8 V	If the exhaust butterfly valve sensor system fails (the output voltage is out of the usable range, wiring short or open), the ECU locks the exhaust butterfly valve at full open position near, and it stops the current to the exhaust butterfly valve actuator.
35	Immobilizer Amplifier (Equipped Models)	–	If the immobilizer system fails (no signal, wiring short or open), the vehicle does not start, and does not run.
36	Ignition Key	The ignition key must use register key.	If the blank key or broken key is used, the vehicle does not start the engine.
39	ECU Communication Line	The ECU sends the data to the meter unit through the CAN communication line.	–
3A	Purge Valve (Other than US, CA Models)	The purge valve controls the flow of the purge air for the canister and shutting the solenoid valve.	If the purge valve fails (the ECU recognize the purge valve ON without the activation signal from the ECU), the ECU sets the duty rate for the purge valve 0% and sets internal control to Actuator Malfunction Backup Mode (*4).
3C	ESD ECU	The ESD ECU sends the data (for status of ESD) to the meter unit through the CAN communication line.	If the communication data is not sent, the ESD system maintains the last damping force setting.
3E	Quick Shifter Sensor	Output Voltage 0.2 ~ 4.8 V	If the quick shifter sensor fails (wiring short or open, signal chattering), the ECU stops KQS.
41	Primary Fuel Injector #1*	The injector must send signals continuously to the ECU.	When this error happens, the ECU stops all auxiliary controls (Rain Mode, KTRC, KEBC, KQS, KLCM).
42	Primary Fuel Injector #2*	The injector must send signals continuously to the ECU.	When this error happens, the ECU stops all auxiliary controls (Rain Mode, KTRC, KEBC, KQS, KLCM).
43	Primary Fuel Injector #3*	The injector must send signals continuously to the ECU.	When this error happens, the ECU stops all auxiliary controls (Rain Mode, KTRC, KEBC, KQS, KLCM).
44	Primary Fuel Injector #4*	The injector must send signals continuously to the ECU.	When this error happens, the ECU stops all auxiliary controls (Rain Mode, KTRC, KEBC, KQS, KLCM).

Self-Diagnosis

Service Codes	Parts or Function	Output Signal Usable Range or Criteria	Backups by ECU
46	Fuel Pump Relay	(1) When the relay ON condition, battery monitor voltage 5 V or more. (2) When the relay OFF condition, battery monitor voltage less than 5 V.	When this error happens, the ECU stops all auxiliary controls (Rain Mode, KTRC, KEBC, KQS, KLCM).
49	Return Spring	TPS Output Voltage (default position of the throttle valve by learning function) 4 V or more	When this error happens, the ECU stops all auxiliary controls (Rain Mode, KTRC, KEBC, KQS, KLCM).
4A	Secondary Fuel Injector #1*	The injector must send signals continuously to the ECU.	When this error happens, the ECU also stops auxiliary controls (Rain Mode, KTRC, KEBC, KLCM).
4B	Secondary Fuel Injector #2*	The injector must send signals continuously to the ECU.	When this error happens, the ECU also stops auxiliary controls (Rain Mode, KTRC, KEBC, KLCM).
4C	Secondary Fuel Injector #3*	The injector must send signals continuously to the ECU.	When this error happens, the ECU also stops auxiliary controls (Rain Mode, KTRC, KEBC, KLCM).
4D	Secondary Fuel Injector #4*	The injector must send signals continuously to the ECU.	When this error happens, the ECU also stops auxiliary controls (Rain Mode, KTRC, KEBC, KLCM).
51	Stick Coil #1*	The ECU sends signals (output voltage) continuously to the stick coil.	If the stick coil #1 primary winding has failures (no signal, wiring short or open), the ECU shuts off the injector #1 to stop fuel to the cylinder #1, though the engine keeps running. When this error happens, the ECU stops all auxiliary controls (Rain Mode, KTRC, KEBC, KQS, KLCM).
52	Stick Coil #2*	The ECU sends signals (output voltage) continuously to the stick coil.	If the stick coil #2 primary winding has failures (no signal, wiring short or open), the ECU shuts off the injector #2 to stop fuel to the cylinder #2, though the engine keeps running. When this error happens, the ECU stops all auxiliary controls (Rain Mode, KTRC, KEBC, KQS, KLCM).
53	Stick Coil #3*	The ECU sends signals (output voltage) continuously to the stick coil.	If the stick coil #3 primary winding has failures (no signal, wiring short or open), the ECU shuts off the injector #3 to stop fuel to the cylinder #3, though the engine keeps running. When this error happens, the ECU stops all auxiliary controls (Rain Mode, KTRC, KEBC, KQS, KLCM).

Self-Diagnosis

Service Codes	Parts or Function	Output Signal Usable Range or Criteria	Backups by ECU
54	Stick Coil #4*	The ECU sends signals (output voltage) continuously to the stick coil.	If the stick coil #4 primary winding has failures (no signal, wiring short or open), the ECU shuts off the injector #4 to stop fuel to the cylinder #4, though the engine keeps running. When this error happens, the ECU stops all auxiliary controls (Rain Mode, KTRC, KEBC, KQS, KLCM).
56	Radiator Fan Relay	When the radiator fan relay is OFF, the relay is opened.	–
58	ETV Actuator	The actuator operates open and close of the throttle valve by the pulse signal from the ECU.	If the ETV actuator fails (the signal is out to the usable range, wiring short or open), the ECU stops the current to the actuator, and sets to the Limp Home Mode (*1). When this error happens, the ECU stops all auxiliary controls (Rain Mode, KTRC, KEBC, KQS, KLCM).
63	Exhaust Butterfly Valve Actuator	The actuator operates open and close of the exhaust butterfly valve by the pulse signal from the ECU.	If the exhaust butterfly valve actuator fails (the signal is out to the usable range, wiring short or open), the ECU stops the current to the actuator.
64	Air Switching Valve	The air switching valve controls the flow of the secondary air by opening and shutting the solenoid valve.	–
67	Oxygen Sensor Heater	The oxygen sensor heater raises temperature of the sensor for its earlier activation.	–
69	Knock Sensor	The knock sensor send signals (output voltage) continuously to the ECU.	If the knock sensor fails, the ECU sets the knock control ignition timing advance at 0 [CA].
6A	Purge Valve (for Supercharger)	The purge valve (for supercharger) controls the flow of the vacuum air for the blow-off valve and shutting the solenoid valve.	If the purge valve (for supercharger) fails (the ECU recognize the purge valve (for supercharger) ON without activation signal from the ECU), the ECU sets the purge valve (for supercharger) OFF and internal control to Actuator Malfunction Backup Mode(*4).

Self-Diagnosis

Service Codes	Parts or Function	Output Signal Usable Range or Criteria	Backups by ECU
7E	Intake Air Chamber Pressure Sensor	Intake Air Pressure (Absolute) Pv = 150 ~ 2 556 mmHg	If the air intake chamber pressure sensor system fails (the signal is out of the usable range, wiring short or open), the ECU sets Pv at 760 mmHg. When this error happens, the ECU stops all auxiliary controls (Rain Mode, KTRC, KEBC, KQS, KLCM).
94	Fuel Supply System	Fuel correction value exceeds a threshold.	–
97	Battery	The ECU monitors the battery voltage when the fuel pump operates. Detection Voltage: less than 6.3 V	If the ECU senses a battery failure (e.g. low battery voltage), the ECU sets to the Limp Home Mode (*1). When this error happens, the ECU stops all auxiliary controls (Rain Mode, KTRC, KEBC, KQS, KLCM).
98	ETV Control Circuit	–	If the ETV control circuit fails (circuit voltage low or high), the ECU sets to the Limp Home Mode (*1). When ETV control circuit failure is “ROM check error” or “ASIC error,” the ECU continues self-reset and does not start. When this error happens, the ECU stops all auxiliary controls (Rain Mode, KTRC, KEBC, KQS, KLCM).
E2E	ESD Actuator	The actuator operates open and close of the oil passage of ESD by the pulse signal from the ESD ECU.	If the ESD actuator fails (the signal is out to the usable range, wiring short or open), the ESD ECU stops the current to the actuator. The ESD system maintains the last damping force setting.
E3B	ESD ECU	The ESD ECU controls the ESD actuator, and it sends and receives data via the CAN communication line.	If the ESD ECU fails, the charging system troubles, the input signals troubles or CAN communication line troubles, the ESD system maintains the last damping force setting.
E3F	ESD ECU	The ESD ECU operates actuator for initial calibration when the ignition switch is turned on.	If the ignition switch is turned on while moving the vehicle, the ESD ECU stops the initial calibration and it maintains the softest damping force setting.
E8E	IMU	The IMU sends the data to the ECU and ABS hydraulic unit through the CAN communication line.	If the IMU fails, the ECU stops the KLCM and the wheelie control.
E8F	IMU Communication Line	The IMU sends the data to the ECU and ABS hydraulic unit through the CAN communication line.	If the IMU fails, the ECU stops the KLCM and the wheelie control.

Self-Diagnosis

Note:

(*1): Limp Home Mode: when parts related the ETV malfunctioned, backup methods are used in ECU control.
These methods called Limp Home Mode is following;
Stops ETV control
Controls output power by the ignition timing
Restricts throttle position reference value

(*2): D-J Method: When the engine load is light like at idling or low speed, the ECU determines the injection quantity by calculating from the throttle vacuum (intake air pressure sensor output voltage) and engine speed (crankshaft sensor output voltage). This method is called D-J method.

(*3): α-N Method: As the engine speed increases, and the engine load turns middle to heavy, the ECU determines the injection quantity by calculating from the throttle opening (throttle position sensor output voltage) and the engine speed. This method is called α-N method.

(*4): Actuator Malfunction Backup Mode: When certain parts (the parts indicated in the table above) malfunctioned, the ECU set the special failsafe control; fuel cut, fuel quantity correction, ignition cut, ignition timing correction electric throttle valve specification correction.

*: This depends on the number of stopped cylinders.

NOTE

○*When inspecting the ECU connector, refer to the terminal numbers of the ECU connectors in the DFI System section in the Fuel System (DFI) chapter.*

Throttle Position Sensor (Service Code 11) (DTC P0120, P0121, P0122, P0220, P0223)

Throttle Position Sensor Removal

NOTICE

Do not remove the throttle position sensor in the gear case [A] since it has been adjusted and set with precision at the factory. Never drop the throttle body assy especially on a hard surface. Such a shock to the throttle sensor can damage it.

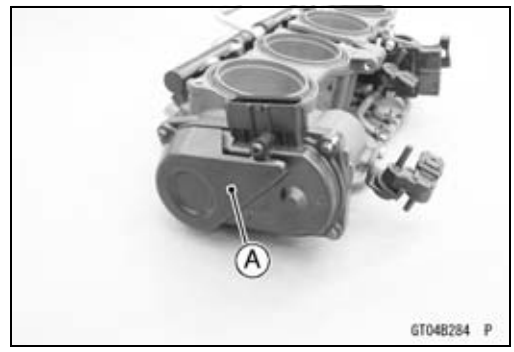

Throttle Position Sensor Input Voltage Inspection

NOTE

○*Be sure the battery is fully charged.*

- Turn the ignition switch off.
- Remove:
  Fuel Tank (see Fuel Tank Removal in the Fuel System (DFI) chapter)
- Slide the dust cover.
- Disconnect:
  Throttle Position Sensor Connector [A]

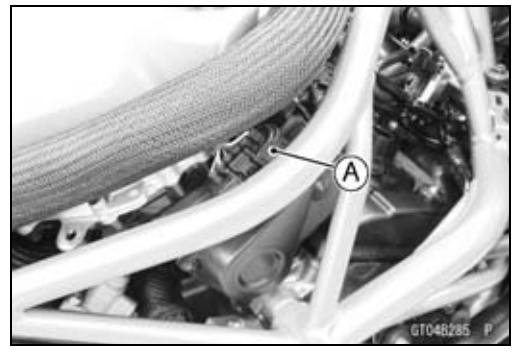

- Connect the measuring adapters [A] between the main harness connector and throttle position sensor connector.
  Main Harness [B]
  Throttle Position Sensor [C]

  Special Tool - Measuring Adapter: 57001-1700

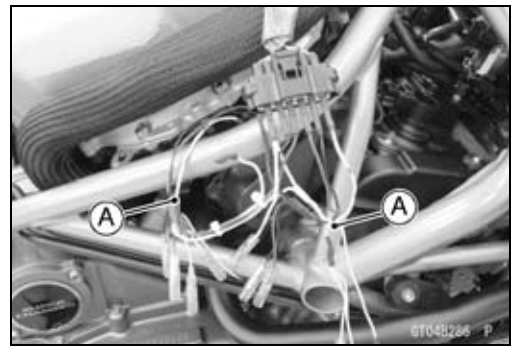

- Connect a digital meter [D] to the measuring adapter leads.

  Throttle Position Sensor Input Voltage
  Connections to Adapters:
  Digital Meter (+) → R (sensor W) lead
  Digital Meter (–) → BK (sensor BK) lead

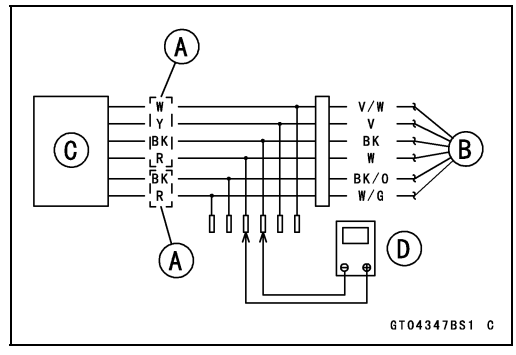

- Measure the input voltage with the engine stopped and with the connector joined.
- Turn the ignition switch on.

  Input Voltage
  Standard: DC 4.75 ~ 5.25 V

- Turn the ignition switch off.

★If the reading is within the standard, check the output voltage (see Throttle Position Sensor Output Voltage Inspection).

Throttle Position Sensor (Service Code 11) (DTC P0120, P0121, P0122, P0220, P0223)

★If the reading is out of the standard, remove the ECU and check the wiring for continuity between main harness connectors.

○Disconnect the ECU and sensor connectors.

Wiring Continuity Inspection
ECU Connector [A] ←→
Throttle Position Sensor Connector [B]
ECU Terminal 71 [C] ←→ Sensor Terminal [D]
ECU Terminal 80 [E] ←→ Sensor Terminal [F]

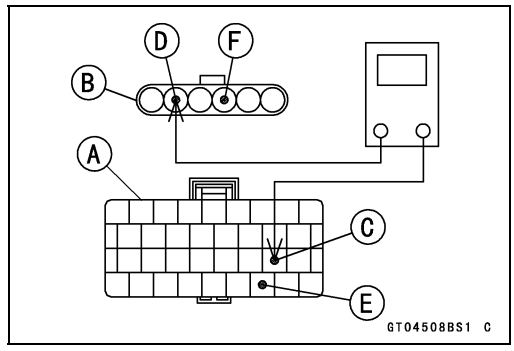

★If the wiring is good, check the ECU for its ground and power supply (see ECU Power Supply Inspection in the Fuel System (DFI) chapter).

★If the ground and power supply are good, replace the ECU (see ECU Removal/Installation in the Fuel System (DFI) chapter).

Throttle Position Sensor Output Voltage Inspection

● Measure the output voltage at the throttle position sensor in the same way as input voltage inspection, note the following.

○Disconnect the throttle position sensor connector and connect the measuring adapters [A] between these connectors.
Main Harness [B]
Throttle Position Sensor [C]
Digital Meter [D]

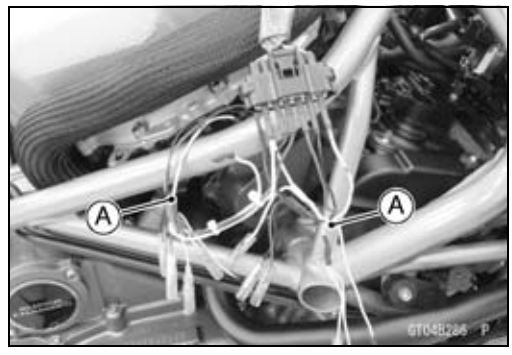

Special Tool - Measuring Adapter: 57001-1700

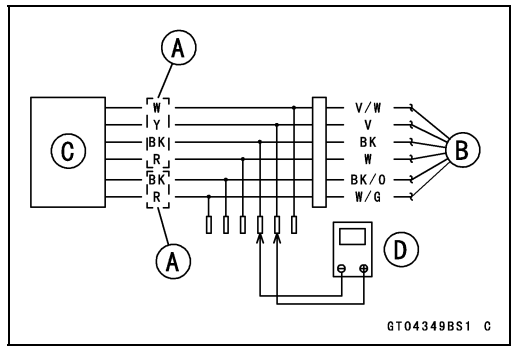

Throttle Position Sensor Output Voltage
Connections to Adapters:
(1) Digital Meter (+) → Y (sensor V) lead
Digital Meter (–) → BK (sensor BK) lead
(2) Digital Meter (+) → W (sensor V/W) lead
Digital Meter (–) → BK (sensor BK) lead

● Measure the output voltage with the engine stopped and with the connector joined.

● Turn the ignition switch on.

Output Voltage
Standard: (1) DC 2.30 ~ 2.70 V at full throttle opening (for reference)
(2) DC 2.30 ~ 2.70 V at full throttle opening (for reference)

NOTE

○*Open the throttle, confirm the output voltage will be raise.*

○*When the throttle is ordinary position, the standard value is not determined because there is some uncertain elements, e.g. water temperature, throttle valve initial opening, etc.*

● Turn the ignition switch off.

★If the reading is out of the standard, replace the throttle body assy.

Throttle Position Sensor (Service Code 11) (DTC P0120, P0121, P0122, P0220, P0223)

★If the reading is within the standard, remove the ECU and check the wiring for continuity between main harness connectors.

○Disconnect the ECU and sensor connectors.

Wiring Continuity Inspection

ECU Connector [A] ←→

Throttle Position Sensor Connector [B]

ECU Terminal 72 [C] ←→ Sensor Terminal [D]

ECU Terminal 79 [E] ←→ Sensor Terminal [F]

ECU Terminal 80 [G] ←→ Sensor Terminal [H]

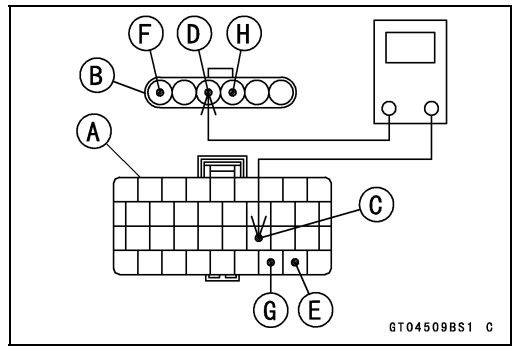

★If the wiring is good, check the ECU for its ground and power supply (see ECU Power Supply Inspection in the Fuel System (DFI) chapter).

★If the ground and power supply are good, replace the ECU (see ECU Removal/Installation in the Fuel System (DFI) chapter).

Throttle Position Sensor Circuit

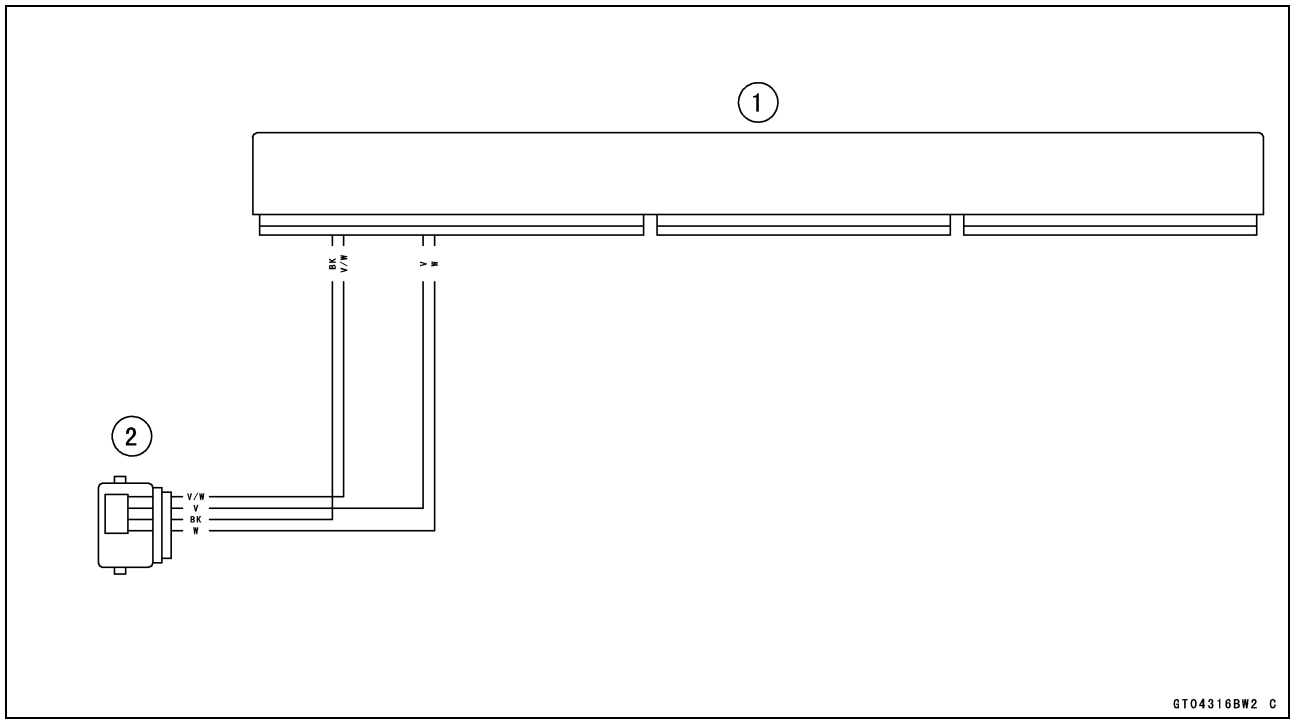

1. ECU
2. Throttle Position Sensor/ETV Actuator

Intake Air Pressure Sensor (Service Code 12) (DTC P0105, P0107)

Intake Air Pressure Sensor Removal

NOTICE
Never drop the intake air pressure sensor especially on a hard surface. Such a shock to the sensor can damage it.

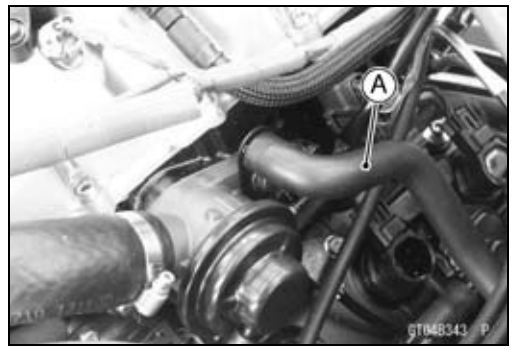

- Remove:
  Fuel Tank (see Fuel Tank Removal in the Fuel System (DFI) chapter)
- Disconnect the air switching valve hose [A].

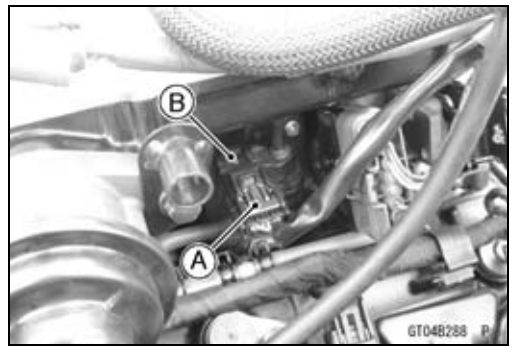

- Disconnect:
  Intake Air Pressure Sensor Connector [A]
- Remove the intake air pressure sensor [B] from the bracket.

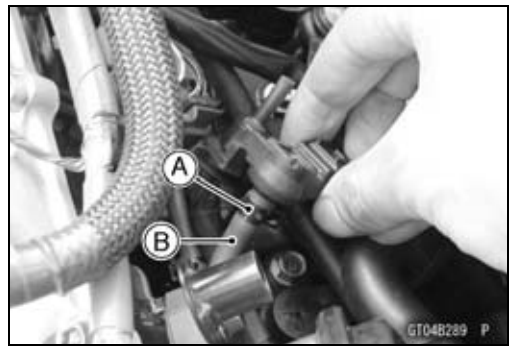

- Slide the clamp [A].
- Disconnect the vacuum hose [B].
- Remove the rubber damper from the intake air pressure sensor.

Intake Air Pressure Sensor Installation

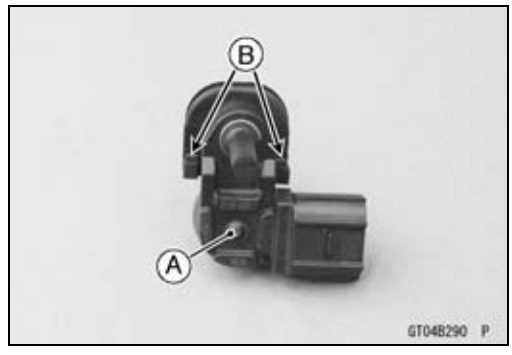

- Installation is the reverse of removal.
- Position the intake air pressure sensor [A] between the projections [B] on the rubber damper.

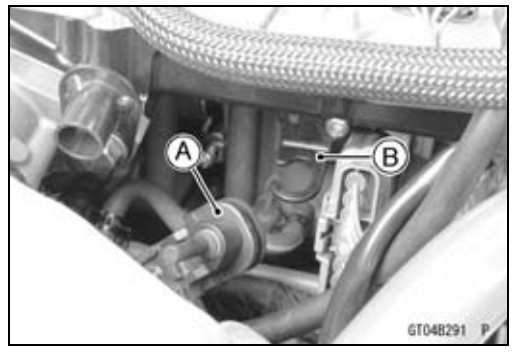

- Install the rubber damper [A] on the bracket [B].

Intake Air Pressure Sensor (Service Code 12) (DTC P0105, P0107)

Intake Air Pressure Sensor Input Voltage Inspection

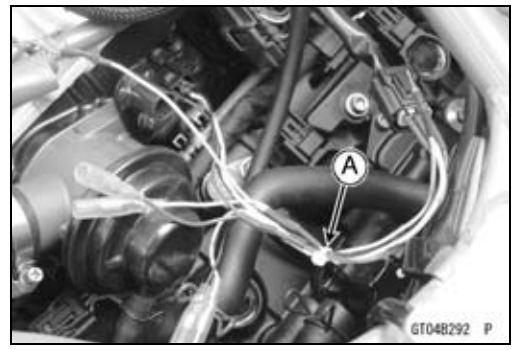

NOTE

○*Be sure the battery is fully charged.*

- Turn the ignition switch off.
- Disconnect the air switching valve hose (see Intake Air Pressure Sensor Removal).
- Disconnect the intake air pressure sensor connector and connect the measuring adapter [A] between these connectors.
  Main Harness [B]
  Intake Air Pressure Sensor [C]

Special Tool - Measuring Adapter: 57001-1700

- Connect a digital meter [D] to the measuring adapter leads.

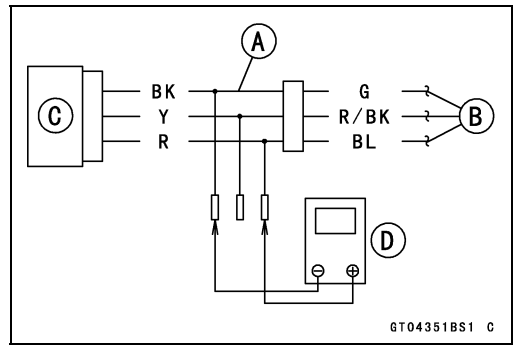

Intake Air Pressure Sensor Input Voltage
Connections to Adapter:
Digital Meter (+) → R (sensor BL) lead
Digital Meter (–) → BK (sensor G) lead

- Measure the input voltage with the engine stopped and with the connector joined.
- Turn the ignition switch on.

Input Voltage
Standard: DC 4.75 ~ 5.25 V

- Turn the ignition switch off.

★If the reading is within the standard, check the output voltage (see Intake Air Pressure Sensor Output Voltage Inspection).

★If the reading is out of the standard, remove the ECU and check the wiring for continuity between main harness connectors.

○Disconnect the ECU and sensor connectors.

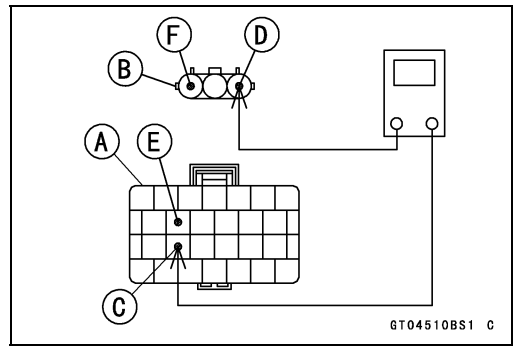

Wiring Continuity Inspection
ECU Connector [A] ←→
Intake Air Pressure Sensor Connector [B]
ECU Terminal 44 [C] ←→ Sensor Terminal [D]
ECU Terminal 38 [E] ←→ Sensor Terminal [F]

★If the wiring is good, check the ECU for its ground and power supply (see ECU Power Supply Inspection in the Fuel System (DFI) chapter).

★If the ground and power supply are good, replace the ECU (see ECU Removal/Installation in the Fuel System (DFI) chapter).

Intake Air Pressure Sensor (Service Code 12) (DTC P0105, P0107)

Intake Air Pressure Sensor Output Voltage Inspection

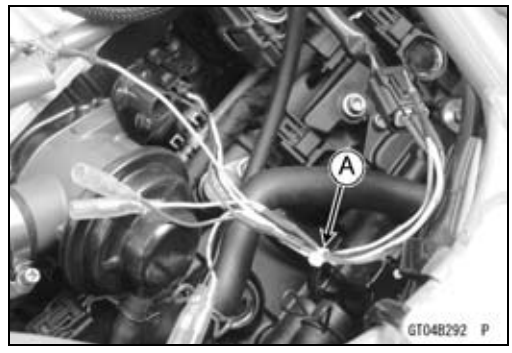

● Measure the output voltage at the intake air pressure sensor in the same way as input voltage inspection, note the following.

○Disconnect the intake air pressure sensor connector and connect the measuring adapter [A] between these connectors.

Main Harness [B]
Intake Air Pressure Sensor [C]
Digital Meter [D]

Special Tool - Measuring Adapter: 57001-1700

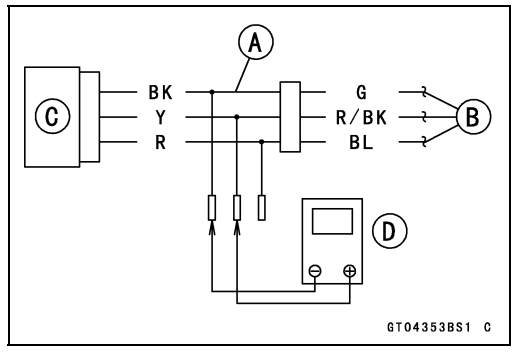

Intake Air Pressure Sensor Output Voltage
Connections to Adapter:
Digital Meter (+) → Y (sensor R/BK) lead
Digital Meter (–) → BK (sensor G) lead

● Measure the output voltage with the engine stopped and with the connector joined.

● Turn the ignition switch on.

Output Voltage
Usable Range: DC 1.43 ~ 1.55 V at standard atmospheric pressure (101.32 kPa, 76 cmHg)

NOTE

○*The output voltage changes according to local atmospheric pressure.*

● Turn the ignition switch off.

★If the reading is out of the usable range, replace the sensor.

★If the reading is within the usable range, remove the ECU and check the wiring for continuity between main harness connectors.

○Disconnect the ECU and sensor connectors.

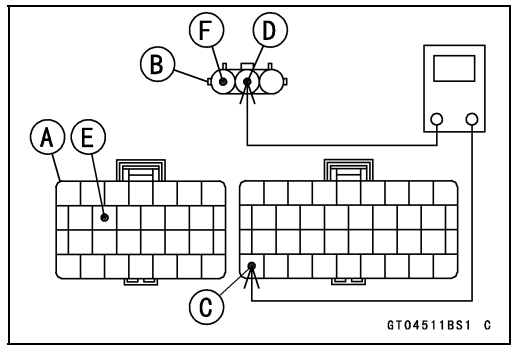

Wiring Continuity Inspection
ECU Connector [A] ←→
Intake Air Pressure Sensor Connector [B]
ECU Terminal 86 [C] ←→ Sensor Terminal [D]
ECU Terminal 38 [E] ←→ Sensor Terminal [F]

Intake Air Pressure Sensor (Service Code 12) (DTC P0105, P0107)

★If the wiring is good, check the sensor for various vacuum.
- Remove the intake air pressure sensor [A] and disconnect the vacuum hose from the sensor.
- Connect an auxiliary hose [B] to the intake air pressure sensor.
- Temporarily install the intake air pressure sensor to the motorcycle.

○Connect a digital meter [C], vacuum gauge [D], the fork oil level gauge [E] and the measuring adapter to the intake air pressure sensor.

Special Tools - Fork Oil Level Gauge: 57001-1290
Vacuum Gauge: 57001-1369
Measuring Adapter: 57001-1700

Intake Air Pressure Sensor Output Voltage
Connections to Adapter:
Digital Meter (+) → Y (sensor R/BK) lead
Digital Meter (–) → BK (sensor G) lead

○Turn the ignition switch on.
○Measure the intake air pressure sensor output voltage from various vacuum readings, while pulling the handle of the fork oil level gauge.
○Check the intake air pressure sensor output voltage, using the following formula and chart.

Suppose:
Pg: Vacuum Pressure (Gauge) of Throttle Body
Pl: Local Atmospheric Pressure (Absolute) measured by a barometer
Pv: Vacuum Pressure (Absolute) of Throttle Body
Vv: Sensor Output Voltage (V)

then
Pv = Pl + Pg

For example, suppose the following data is obtained:
Pg = 151.95 kPa (Vacuum Gauge Reading)
Pl = 101.32 kPa (Barometer Reading)
Vv = 3.8 V (Digital Meter Reading)

then
Pv = 101.32 + 151.95 = 253.27 kPa (Absolute)

Plot this Pv (253.27 kPa) at a point [1] on the chart and draw a vertical line through the point. Then, you can get the usable range [2] of the sensor output voltage.
Usable range = 3.6 ~ 4.0 V
Plot Vv (3.8 V) on the vertical line. → Point [3].
Results: In the chart, Vv is within the usable range and the sensor is normal.

★If the reading is out of the usable range, replace the sensor.
★If the reading is within the usable range, check the ECU for its ground and power supply (see ECU Power Supply Inspection in the Fuel System (DFI) chapter).
★If the ground and power supply are good, replace the ECU (see ECU Removal/Installation in the Fuel System (DFI) chapter).

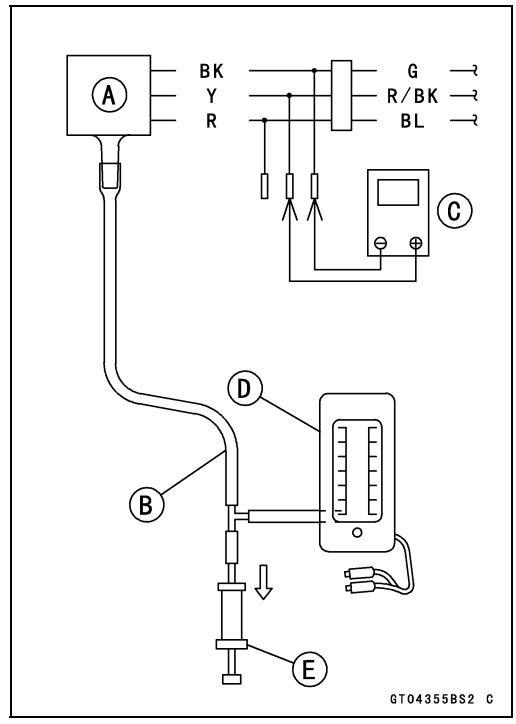

Intake Air Pressure Sensor (Service Code 12) (DTC P0105, P0107)

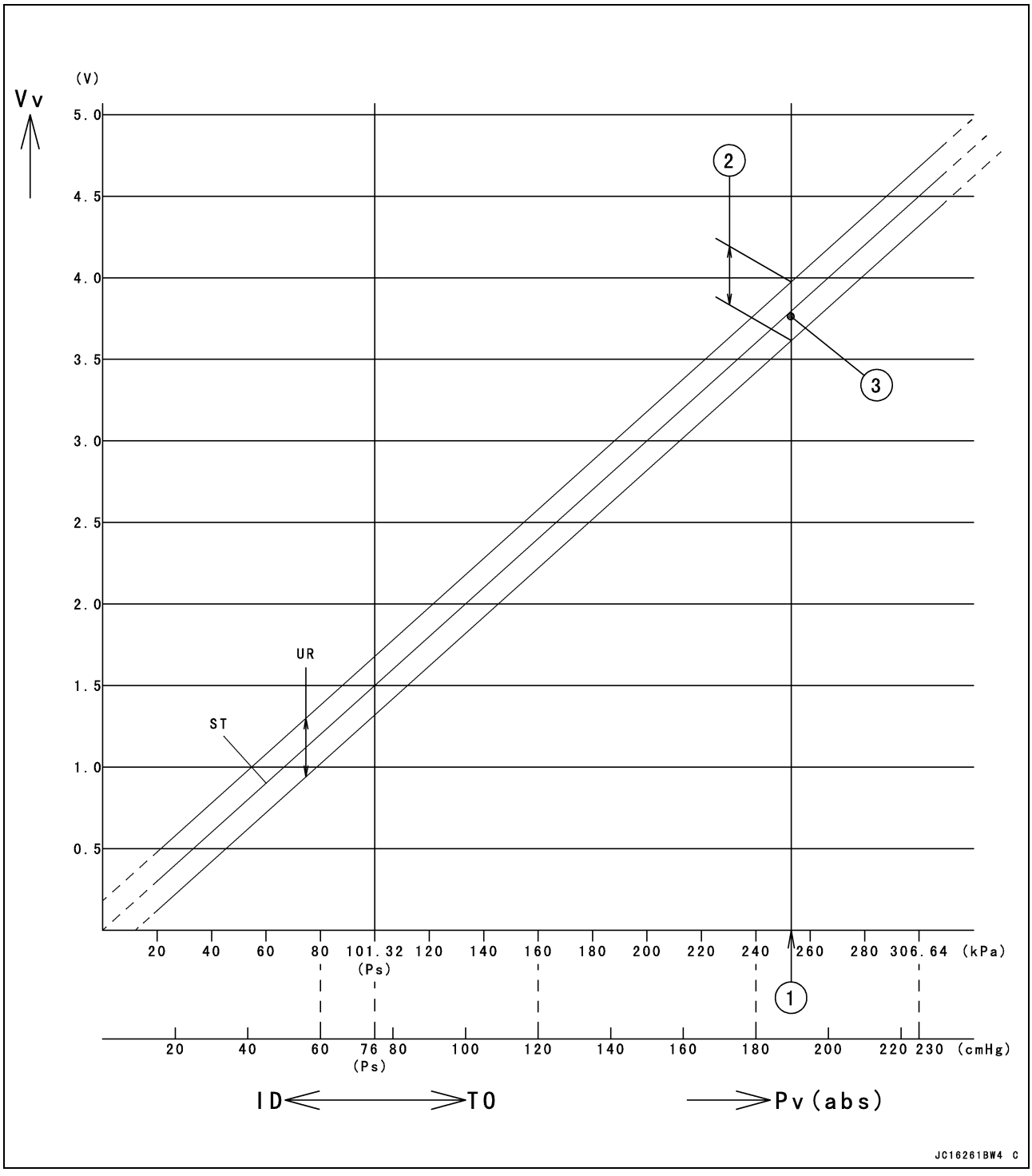

ID: Idling
Ps: Standard Atmospheric Pressure (Absolute)
Pv: Throttle Vacuum Pressure (Absolute)
ST: Standard of Sensor Output Voltage (V)
TO: Throttle Full Open
UR: Usable Range of Sensor Output Voltage (V)
Vv: Intake Air Pressure Sensor Output Voltage (V) (Digital Meter Reading)

Intake Air Pressure Sensor (Service Code 12) (DTC P0105, P0107)

Intake Air Pressure Sensor Circuit

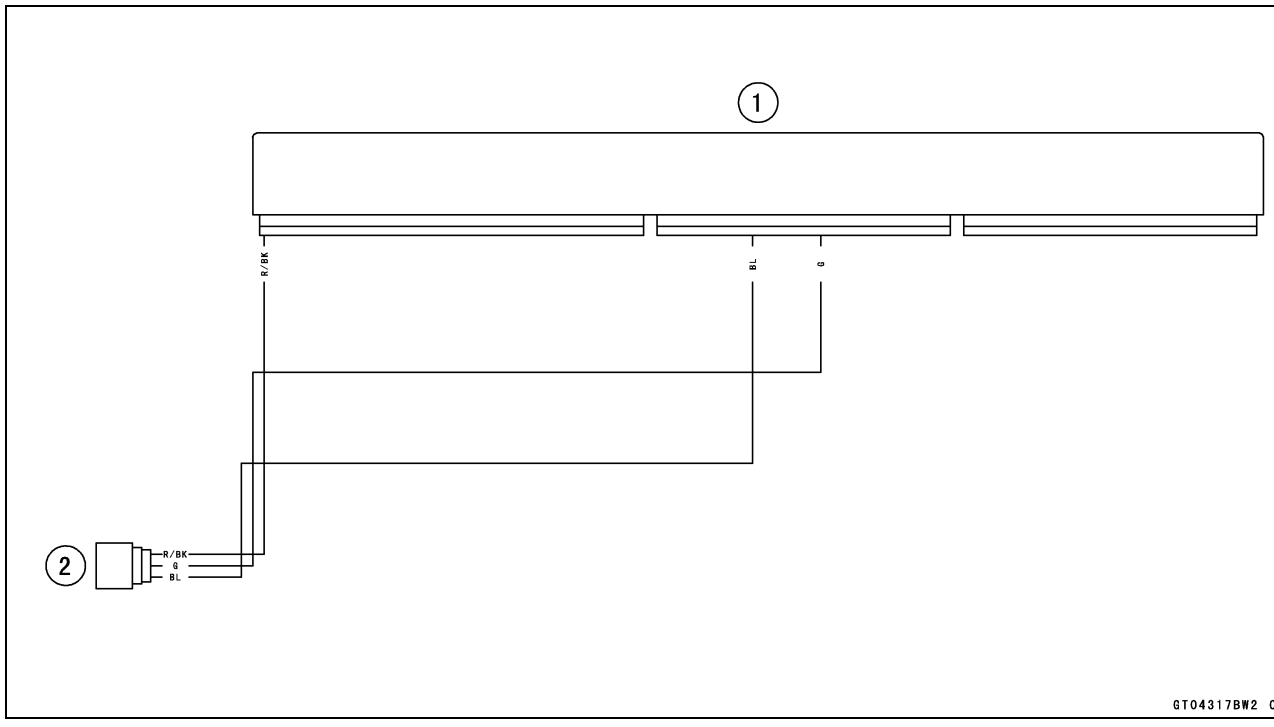

1. ECU
2. Intake Air Pressure Sensor

Intake Air Temperature Sensor (Service Code 13) (DTC P0110, P0112)

Air Intake Chamber Pressure/Temperature Sensor Removal

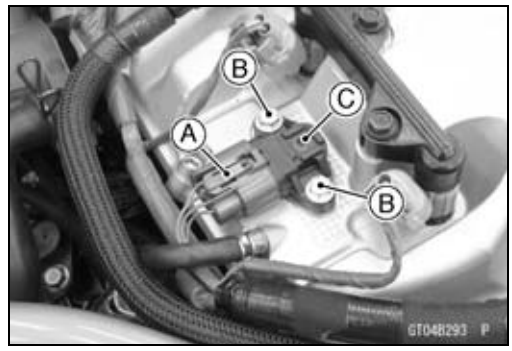

NOTICE

Never drop the sensor especially on a hard surface. Such a shock to the sensor can damage it.

- Remove the fuel tank (see Fuel Tank Removal in the Fuel System (DFI) chapter).
- Disconnect the air intake chamber pressure/temperature sensor connector [A].
- Remove:
  Air Intake Chamber Pressure/Temperature Sensor Bolts [B]
  Air Intake Chamber Pressure/Temperature Sensor [C]

Air Intake Chamber Pressure/Temperature Sensor Installation

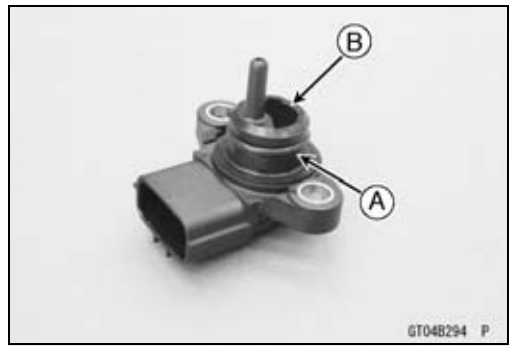

- Be sure to install the O-ring [A].
- Apply engine oil to the O-ring.

NOTE

○*Do not apply engine oil into the hole [B] that senses the pressure.*

- Install the air intake chamber pressure/temperature sensor to the air intake chamber.

○When installing the sensor which is fastened by bolts, tighten the bolts after placing the sensor on the bottom surface completely.

- Tighten:

Torque - Air Intake Chamber Pressure/Temperature Sensor Bolts: 5.0 N·m (0.51 kgf·m, 44 in·lb)

- Connect the air intake chamber pressure/temperature sensor connector.
- Install the fuel tank (see Fuel Tank Installation in the Fuel System (DFI) chapter).

Intake Air Temperature Sensor (Service Code 13) (DTC P0110, P0112)

Intake Air Temperature Sensor Output Voltage Inspection

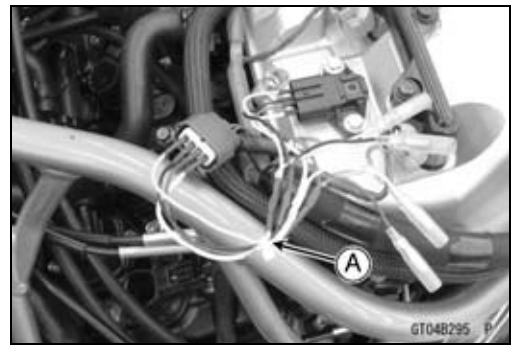

NOTE

○*Be sure the battery is fully charged.*

- Turn the ignition switch off.
- Remove the fuel tank (see Fuel Tank Removal in the Fuel System (DFI) chapter).
- Disconnect the air intake chamber pressure/temperature sensor connector and connect the measuring adapter [A] between these connectors as shown.
  Main Harness [B]
  Air Intake Chamber Pressure/Temperature Sensor [C]

Special Tool - Measuring Adapter: 57001-1700

- Connect a digital meter [D] to the measuring adapter leads.

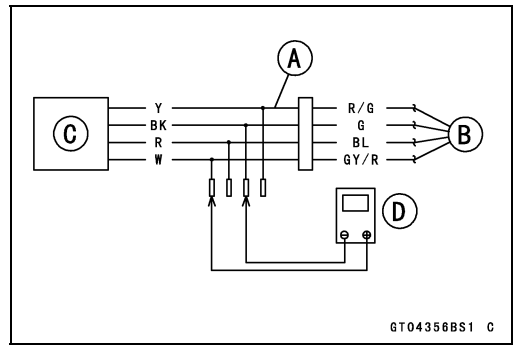

Intake Air Temperature Sensor Output Voltage
Connections to Adapter:
Digital Meter (+) → W (sensor GY/R) lead
Digital Meter (–) → BK (sensor G) lead

- Measure the output voltage with the engine stopped and the connector joined.
- Turn the ignition switch on.

Output Voltage
Standard: About DC 2.50 ~ 3.00 V @20°C (68°F)

NOTE

○*The output voltage changes according to the intake air temperature.*

- Turn the ignition switch off.

★If the reading is within the standard, check the ECU for its ground and power supply (see ECU Power Supply Inspection in the Fuel System (DFI) chapter).

★If the ground and power supply are good, replace the ECU (see ECU Removal/Installation in the Fuel System (DFI) chapter).

★If the reading is out of the standard, remove the ECU and check the wiring for continuity between main harness connectors.

○Disconnect the ECU and sensor connectors.

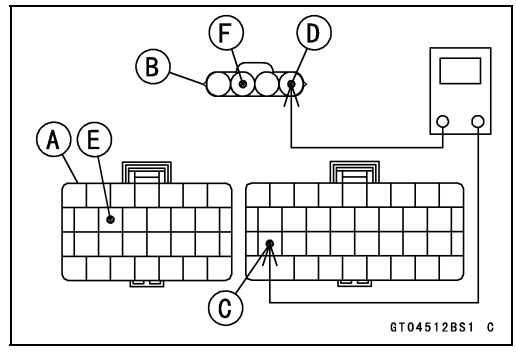

Wiring Continuity Inspection
ECU Connector [A] ←→
Air Intake Chamber Pressure/Temperature Sensor Connector [B]
ECU Terminal 77 [C] ←→ Sensor Terminal [D]
ECU Terminal 38 [E] ←→ Sensor Terminal [F]

★If the wiring is good, check the intake air temperature sensor resistance (see Intake Air Temperature Sensor Resistance Inspection).

Intake Air Temperature Sensor (Service Code 13) (DTC P0110, P0112)

Intake Air Temperature Sensor Resistance Inspection

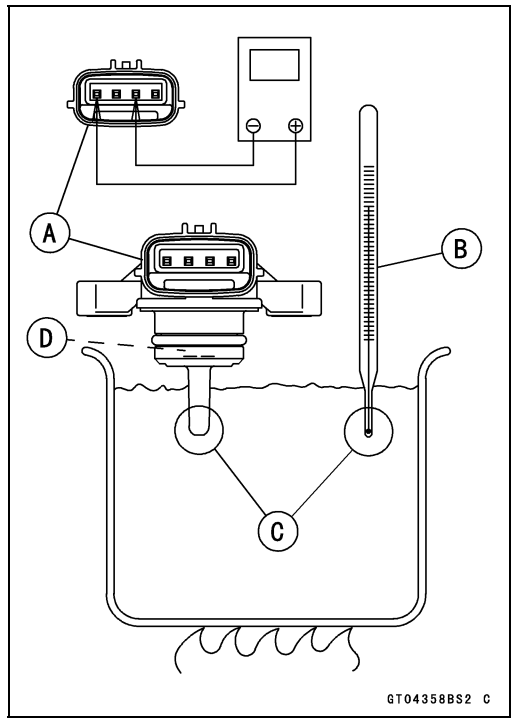

- Remove the air intake chamber pressure/temperature sensor (see Air Intake Chamber Pressure/Temperature Sensor Removal).
- Suspend the sensor [A] in a container of water so that the heat-sensitive portion is submerged.
- Suspend a thermometer [B] with the heat-sensitive portion [C] located in almost the same depth with the sensor.

NOTE

○*Do not submerge the hole [D] that senses the pressure.*
○*The sensor and thermometer must not touch the container side or bottom.*

- Place the container over a source of heat and gradually raise the temperature of the water while stirring the water gently for even temperature.
- Using a digital meter, measure the internal resistance of the sensor across the terminals at the temperatures shown in the following.

Intake Air Temperature Sensor Resistance
Standard: 5.4 ~ 6.6 kΩ @0°C (32°F)
0.29 ~ 0.39 kΩ @80°C (176°F)

★If the reading is out of the standard, replace the sensor.
★If the reading is within the standard, but the problem still exists, replace the ECU (see ECU Removal/Installation in the Fuel System (DFI) chapter).

Intake Air Temperature Sensor Circuit

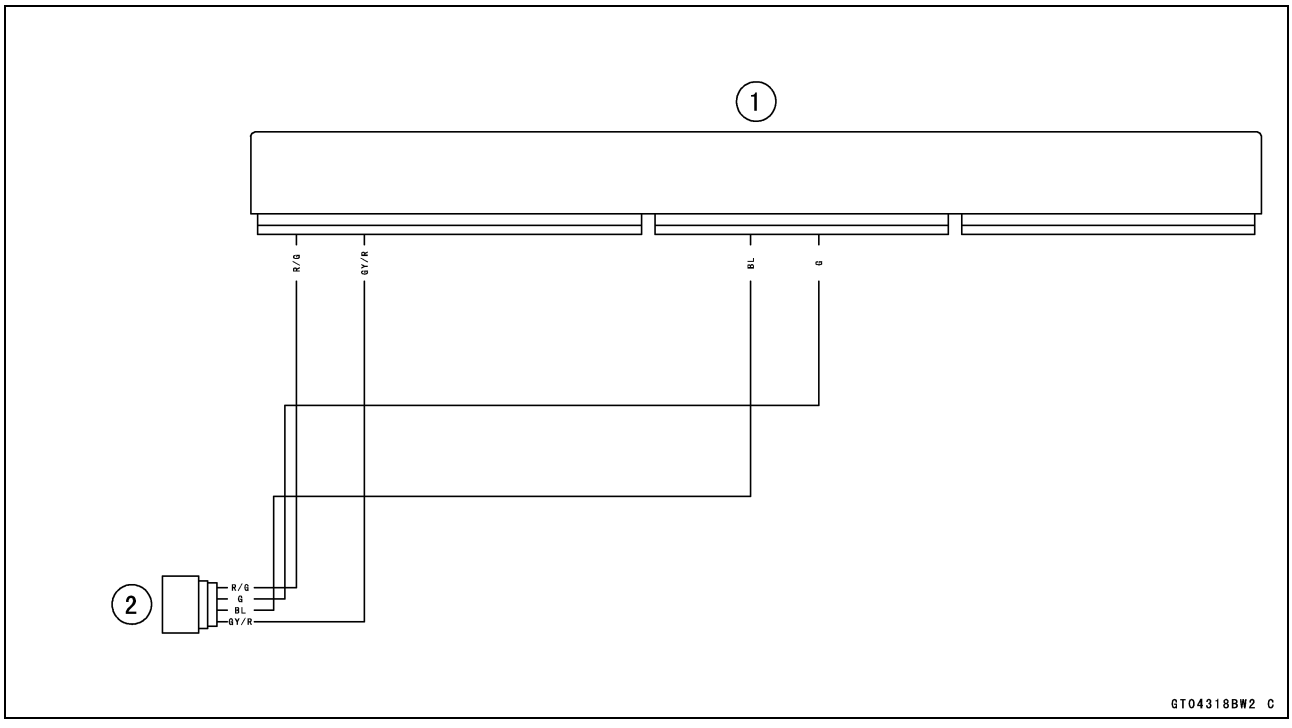

1. ECU
2. Air Intake Chamber Pressure/Temperature Sensor

Water Temperature Sensor (Service Code 14) (DTC P0115, P0117)

Water Temperature Sensor Removal/Installation

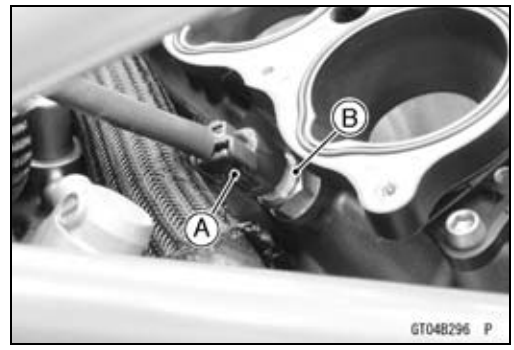

NOTICE
Never drop the water temperature sensor especially on a hard surface. Such a shock to the sensor can damage it.

- Drain the coolant (see Coolant Change in the Periodic Maintenance chapter).
- Remove:
  Throttle Body Assy (see Throttle Body Assy Removal in the Fuel System (DFI) chapter)
- Disconnect:
  Water Temperature Sensor Connector [A]
- Remove:
  Water Temperature Sensor [B] with O-ring
- Replace the O-ring with a new one.
- Tighten:

  Torque - Water Temperature Sensor: 12 N·m (1.2 kgf·m, 106 in·lb)

- Fill the engine with coolant and bleed the air from the cooling system (see Coolant Change in the Periodic Maintenance chapter).

Water Temperature Sensor (Service Code 14) (DTC P0115, P0117)

Water Temperature Sensor Output Voltage Inspection

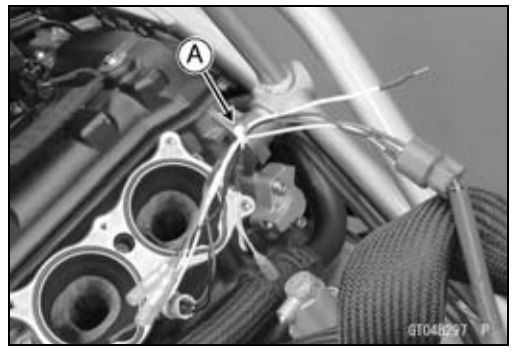

NOTE

○*Be sure the battery is fully charged.*

- Turn the ignition switch off.
- Remove:
  Throttle Body Assy (see Throttle Body Assy Removal in the Fuel System (DFI) chapter)
- Disconnect the water temperature sensor connector and connect the measuring adapter [A] between these connectors as shown.
  Subharness [B]
  Water Temperature Sensor [C]

Special Tool - Measuring Adapter: 57001-1700

- Connect a digital meter [D] to the measuring adapter leads.

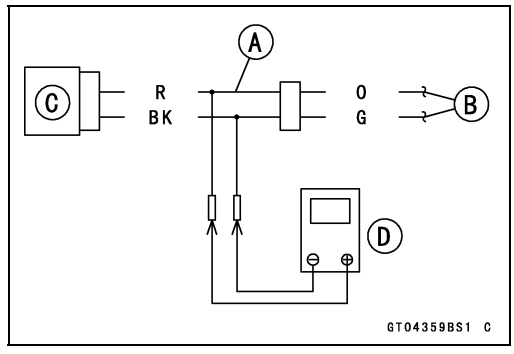

Water Temperature Sensor Output Voltage
Connections to Adapter:
Digital Meter (+) → R (sensor O) lead
Digital Meter (–) → BK (sensor G) lead

- Measure the output voltage with the engine stopped and with the connector joined.
- Turn the ignition switch on.

Output Voltage
Standard: About DC 2.80 ~ 2.97 V @20°C (68°F)

NOTE

○*The output voltage changes according to the coolant temperature in the engine.*

- Turn the ignition switch off.

★If the reading is within the standard, check the ECU for its ground and power supply (see ECU Power Supply Inspection in the Fuel System (DFI) chapter).

★If the ground and power supply are good, replace the ECU (see ECU Removal/Installation in the Fuel System (DFI) chapter).

★If the reading is out of the standard, remove the ECU and check the wiring for continuity between main and subharness connectors.

○Disconnect the ECU and sensor connectors.

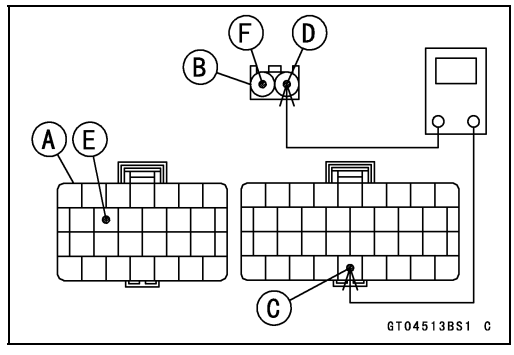

Wiring Continuity Inspection
ECU Connector [A] ←→
Water Temperature Sensor Connector [B]
ECU Terminal 82 [C] ←→ Sensor Terminal [D]
ECU Terminal 38 [E] ←→ Sensor Terminal [F]

★If the wiring is good, check the water temperature sensor resistance (see Water Temperature Sensor Resistance Inspection).

Water Temperature Sensor (Service Code 14) (DTC P0115, P0117)

Water Temperature Sensor Resistance Inspection

● Refer to the Water Temperature Sensor Inspection in the Electrical System chapter.

★If the reading is within the standard, but the problem still exists, replace the ECU (see ECU Removal/Installation in the Fuel System (DFI) chapter).

Water Temperature Sensor Circuit

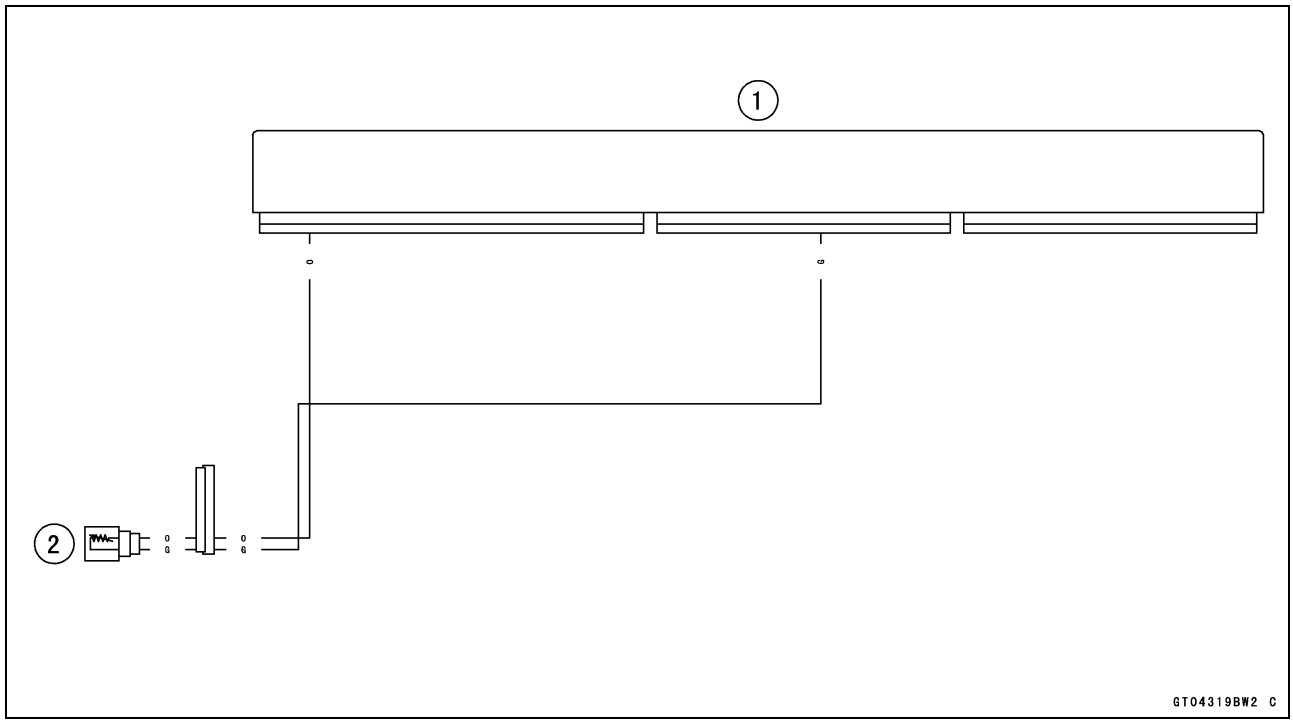

1. ECU
2. Water Temperature Sensor

Atmospheric Pressure Sensor (Service Code 15) (DTC P2226, P2228)

Atmospheric Pressure Sensor Removal

NOTICE
Never drop the atmospheric pressure sensor especially on a hard surface. Such a shock to the sensor can damage it.

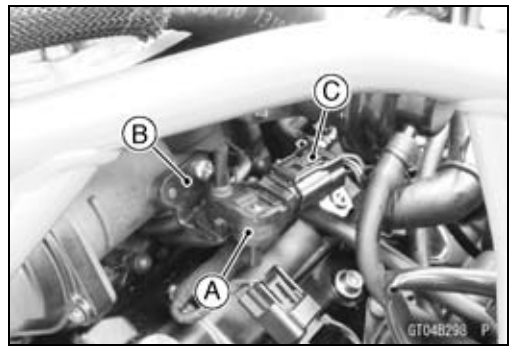

- Remove:
  Fuel Tank (see Fuel Tank Removal in the Fuel System (DFI) chapter)
- Remove the atmospheric pressure sensor [A] from the bracket [B].
- Disconnect:
  Atmospheric Pressure Sensor Connector [C]
- Remove the rubber damper from the atmospheric pressure sensor.

Atmospheric Pressure Sensor Installation

- Position the atmospheric pressure sensor [A] between the projections [B] on the rubber damper.

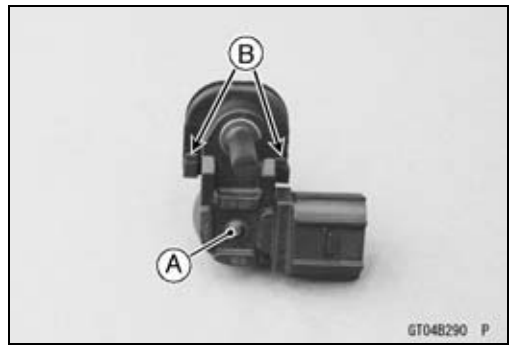

- Connect the atmospheric pressure sensor connector.
- Install the rubber damper [A] on the bracket [B].
- Install:
  Fuel Tank (see Fuel Tank Installation in the Fuel System (DFI) chapter)

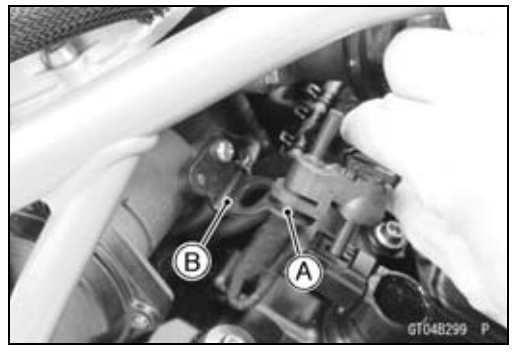

Atmospheric Pressure Sensor (Service Code 15) (DTC P2226, P2228)

Atmospheric Pressure Sensor Input Voltage Inspection



NOTE

○*Be sure the battery is fully charged.*

- Turn the ignition switch off.
- Remove the atmospheric pressure sensor from the bracket (see Atmospheric Pressure Sensor Removal).
- Disconnect the atmospheric pressure sensor connector and connect the measuring adapter [A] between these connectors.
  Main Harness [B]
  Atmospheric Pressure Sensor [C]

Special Tool - Measuring Adapter: 57001-1700

- Connect a digital meter [D] to the measuring adapter leads.

Atmospheric Pressure Sensor Input Voltage
Connections to Adapter:
Digital Meter (+) → R (sensor BL) lead
Digital Meter (–) → BK (sensor G) lead

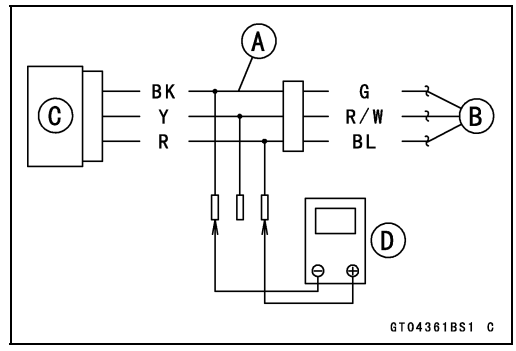

- Measure the input voltage with the engine stopped and with the connector joined.
- Turn the ignition switch on.

Input Voltage
Standard: DC 4.75 ~ 5.25 V

- Turn the ignition switch off.

★If the reading is within the standard, check the output voltage (see Atmospheric Pressure Sensor Output Voltage Inspection).

★If the reading is out of the standard, remove the ECU and check the wiring for continuity between main harness connectors.

○Disconnect the ECU and sensor connectors.

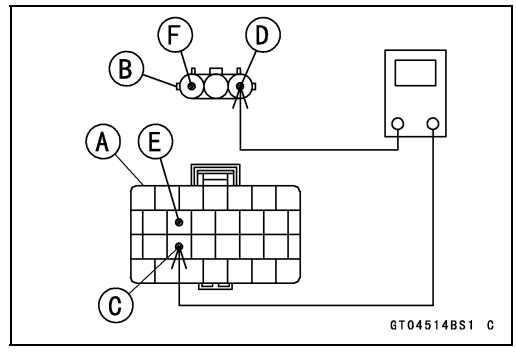

Wiring Continuity Inspection
ECU Connector [A] ←→
Atmospheric Pressure Sensor Connector [B]
ECU Terminal 44 [C] ←→ Sensor Terminal [D]
ECU Terminal 38 [E] ←→ Sensor Terminal [F]

★If the wiring is good, check the ECU for its ground and power supply (see ECU Power Supply Inspection in the Fuel System (DFI) chapter).

★If the ground and power supply are good, replace the ECU (see ECU Removal/Installation in the Fuel System (DFI) chapter).

Atmospheric Pressure Sensor (Service Code 15) (DTC P2226, P2228)

Atmospheric Pressure Sensor Output Voltage Inspection



● Measure the output voltage at the atmospheric pressure sensor in the same way as input voltage inspection, note the following.

○Disconnect the atmospheric pressure sensor connector and connect the measuring adapter [A] between these connectors.

Main Harness [B]
Atmospheric Pressure Sensor [C]
Digital Meter [D]

Special Tool - Measuring Adapter: 57001-1700

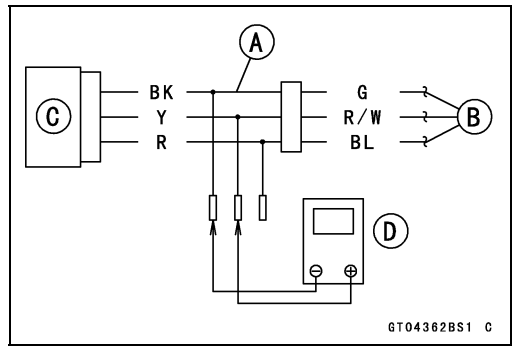

Atmospheric Pressure Sensor Output Voltage
Connections to Adapter:
Digital Meter (+) → Y (sensor R/W) lead
Digital Meter (–) → BK (sensor G) lead

● Measure the output voltage with the engine stopped and with the connector joined.

● Turn the ignition switch on.

Output Voltage
Usable Range: DC 1.43 ~ 1.55 V at standard atmospheric pressure (101.32 kPa, 76 cmHg absolute)

NOTE

○*The output voltage changes according to the local atmospheric pressure.*

● Turn the ignition switch off.

★If the reading is out of the usable range, replace the sensor.

★If the reading is within the usable range, remove the ECU and check the wiring for continuity between main harness connectors.

○Disconnect the ECU and sensor connectors.

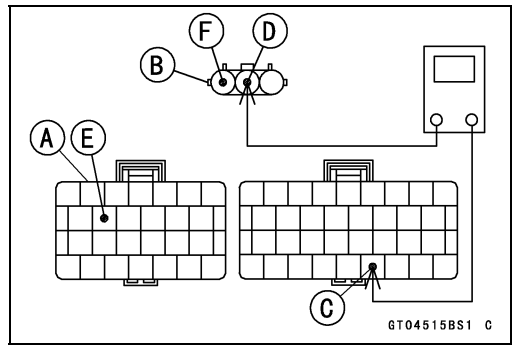

Wiring Continuity Inspection
ECU Connector [A] ←→
Atmospheric Pressure Sensor Connector [B]
ECU Terminal 81 [C] ←→ Sensor Terminal [D]
ECU Terminal 38 [E] ←→ Sensor Terminal [F]

Atmospheric Pressure Sensor (Service Code 15) (DTC P2226, P2228)

★If the wiring is good, check the sensor.
○Determine the local altitude (elevation).
★If you know the local altitude, use the chart in this section.
★If you know the local atmospheric pressure using a barometer, substitute the atmospheric pressure for Pv (vacuum pressure) in the intake air pressure sensor chart (see Intake Air Pressure Sensor Output Voltage Inspection).
○Get the usable range of the atmospheric pressure sensor output voltage in the same way as output voltage inspection of the intake air pressure sensor and check if Va (output voltage) is within the usable range or not.
★If the reading is out of the usable range, replace the sensor.
★If the reading is within the usable range, check the ECU for its ground and power supply (see ECU Power Supply Inspection in the Fuel System (DFI) chapter).
★If the ground and power supply are good, replace the ECU (see ECU Removal/Installation in the Fuel System (DFI) chapter).

Atmospheric Pressure Sensor (Service Code 15) (DTC P2226, P2228)

Atmospheric Pressure/Altitude Relationship

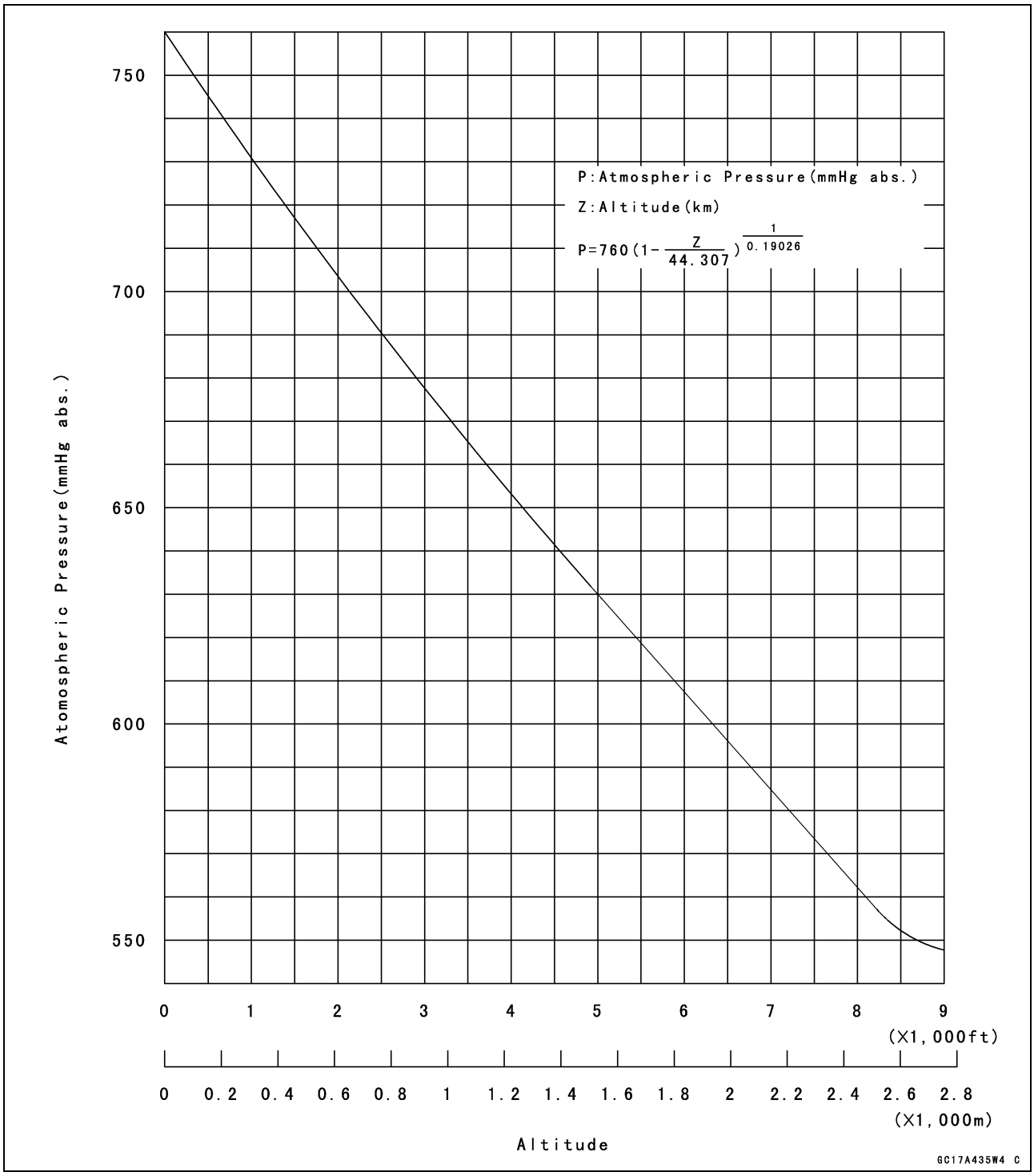

Atmospheric Pressure Sensor (Service Code 15) (DTC P2226, P2228)

Atmospheric Pressure Sensor Circuit

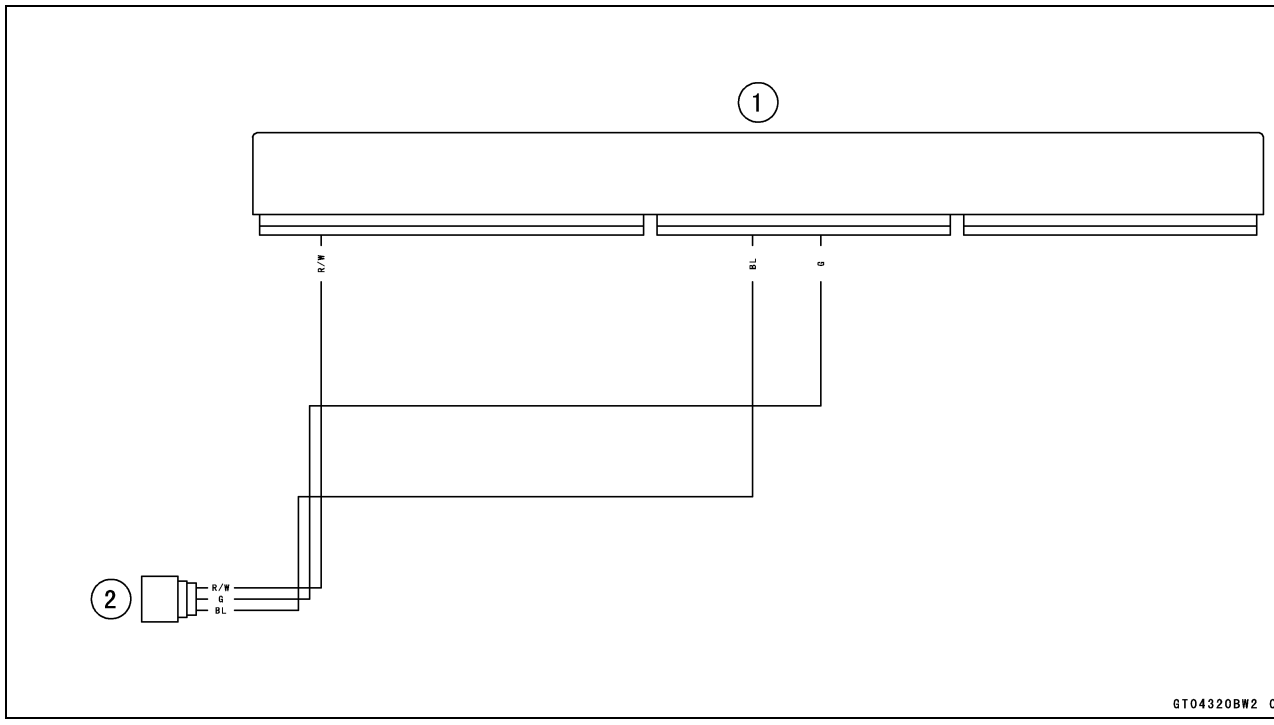

1. ECU
2. Atmospheric Pressure Sensor

Accelerator Position Sensor (Service Code 18) (DTC P2120, P2121, P2123, P2125, P2128)

Accelerator Position Sensor Removal

NOTICE

Do not remove the accelerator position sensor [A] since it has been adjusted and set with precision at the factory. Never drop the throttle body assy especially on a hard surface. Such a shock to the throttle sensor can damage it.

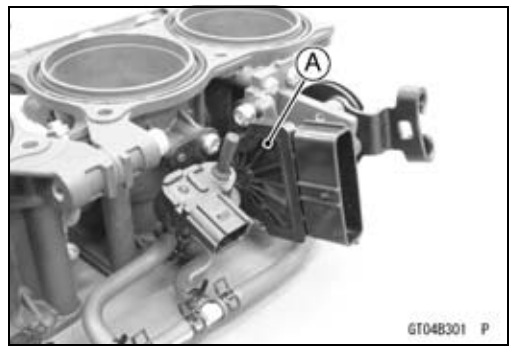

Accelerator Position Sensor Input Voltage Inspection

NOTE

○*Be sure the battery is fully charged.*

- Turn the ignition switch off.
- Remove:
  Fuel Tank (see Fuel Tank Removal in the Fuel System (DFI) chapter)
- Disconnect:
  Accelerator Position Sensor Connector [A]



- Connect the measuring adapters [A] between the main harness connector and accelerator position sensor connector.
  Main Harness [B]
  Accelerator Position Sensor [C]

  Special Tool - Measuring Adapter: 57001-1700

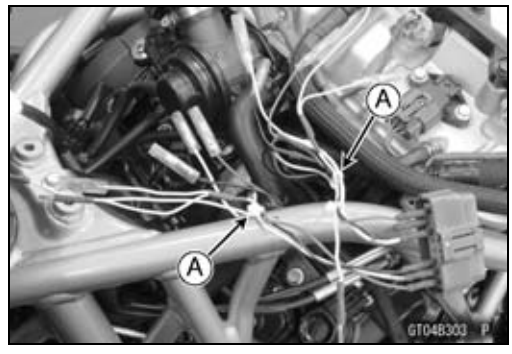

- Connect a digital meter [D] to the measuring adapter leads.

  Accelerator Position Sensor Input Voltage
  Connections to Adapters:
  (1) Digital Meter (+) → R (sensor BL) lead
  Digital Meter (–) → BK (sensor G) lead
  (2) Digital Meter (+) → R (sensor BL) lead
  Digital Meter (+) → BK (sensor G) lead

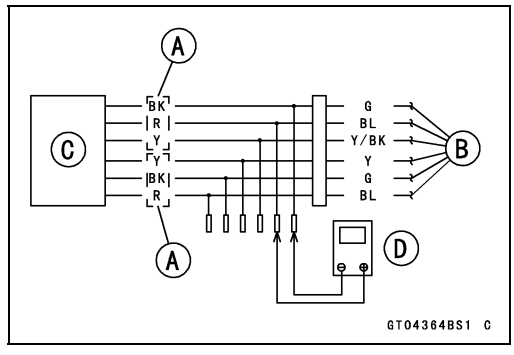

- Measure the input voltage with the engine stopped and with the connector joined.
- Turn the ignition switch on.

  Input Voltage
  Standard: DC 4.75 ~ 5.25 V

- Turn the ignition switch off.

★If the reading is within the standard, check the output voltage (see Accelerator Position Sensor Output Voltage Inspection).

Accelerator Position Sensor (Service Code 18) (DTC P2120, P2121, P2123, P2125, P2128)

★If the reading is out of the standard, remove the ECU and check the wiring for continuity between main harness connectors.

○Disconnect the ECU and sensor connectors.

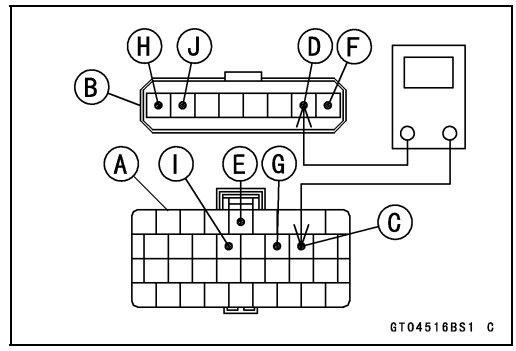

Wiring Continuity Inspection
ECU Connector [A] ←→
Accelerator Position Sensor Connector [B]
(1) ECU Terminal 63 [C] ←→ Sensor Terminal [D]
ECU Terminal 57 [E] ←→ Sensor Terminal [F]
(2) ECU Terminal 64 [G] ←→ Sensor Terminal [H]
ECU Terminal 66 [I] ←→ Sensor Terminal [J]

★If the wiring is good, check the ECU for its ground and power supply (see ECU Power Supply Inspection in the Fuel System (DFI) chapter).

★If the ground and power supply are good, replace the ECU (see ECU Removal/Installation in the Fuel System (DFI) chapter).

Accelerator Position Sensor Output Voltage Inspection

● Measure the output voltage at the accelerator position sensor in the same way as input voltage inspection, note the following.

○Disconnect the accelerator position sensor connector and connect the measuring adapters [A] between these connectors.
Main Harness [B]
Accelerator Position Sensor [C]
Digital Meter [D]

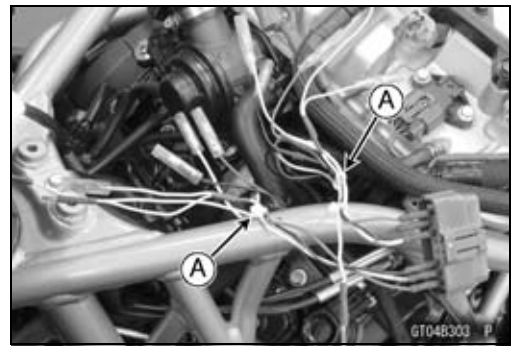

Special Tool - Measuring Adapter: 57001-1700

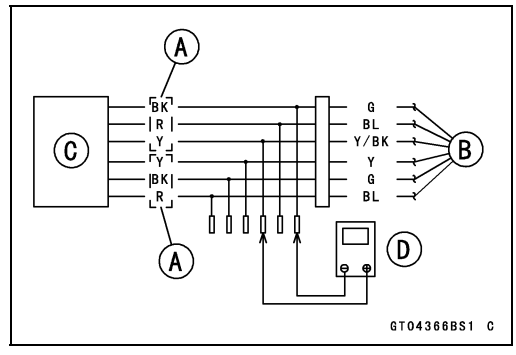

Accelerator Position Sensor Output Voltage
Connections to Adapters:
(1) Digital Meter (+) → Y (sensor Y/BK) lead
Digital Meter (–) → BK (sensor G) lead
(2) Digital Meter (+) → Y (sensor Y) lead
Digital Meter (–) → BK (sensor G) lead

● Measure the output voltage with the engine stopped and with the connector joined.

● Turn the ignition switch on.

Output Voltage
Standard: (1) DC 0.50 ~ 0.90 V at ordinary throttle position
(2) DC 0.35 ~ 1.00 V at ordinary throttle position

NOTE

○*Open the throttle, confirm the output voltage will be raise.*

● Turn the ignition switch off.

★If the reading is out of the standard, check the accelerator position sensor resistance (see Accelerator Position Sensor Resistance Inspection).

Accelerator Position Sensor (Service Code 18) (DTC P2120, P2121, P2123, P2125, P2128)

★If the reading is within the standard, remove the ECU and check the wiring for continuity between main harness connectors.

○Disconnect the ECU and sensor connectors.

Wiring Continuity Inspection
ECU Connector [A] ←→
Accelerator Position Sensor Connector [B]
(1) ECU Terminal 76 [C] ←→ Sensor Terminal [D]
ECU Terminal 57 [E] ←→ Sensor Terminal [F]
(2) ECU Terminal 65 [G] ←→ Sensor Terminal [H]
ECU Terminal 66 [I] ←→ Sensor Terminal [J]

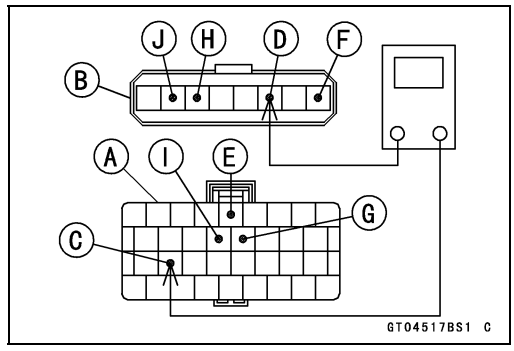

★If the wiring is good, check the ECU for its ground and power supply (see ECU Power Supply Inspection in the Fuel System (DFI) chapter).

★If the ground and power supply are good, replace the ECU (see ECU Removal/Installation in the Fuel System (DFI) chapter).

Accelerator Position Sensor Resistance Inspection

- Turn the ignition switch off.
- Disconnect:
  Accelerator Position Sensor Connector (see Accelerator Position Sensor Input Voltage Inspection)
- Connect a digital meter [A] to the terminals of the accelerator position sensor connector [B].

Accelerator Position Sensor Input Voltage
Connection:
(1) BL lead terminal ←→ G lead terminal
(2) BL lead terminal ←→ G lead terminal

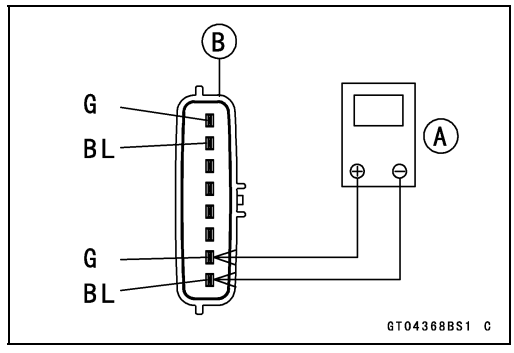

- Measure the accelerator position sensor resistance.

Accelerator Position Sensor Resistance
Standard: 4.5 ~ 6.5 kΩ

★If the reading is out of the standard, replace the throttle body assy (see Throttle Body Assy Removal/Installation in the Fuel System (DFI) chapter).

Accelerator Position Sensor (Service Code 18) (DTC P2120, P2121, P2123, P2125, P2128)

Accelerator Position Sensor Circuit

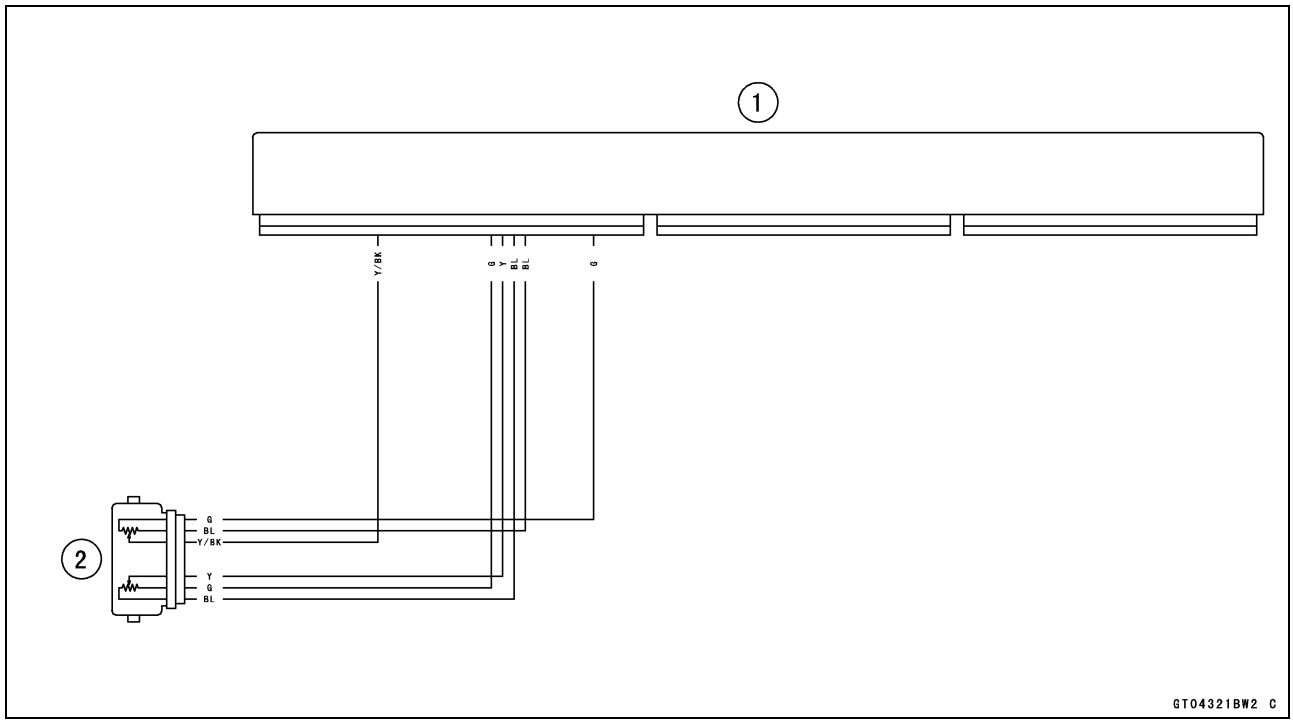

1. ECU
2. Accelerator Position Sensor

ABS Hydraulic Unit Communication Error (Service Code 1B)

ABS Hydraulic Unit Communication Line Inspection

○When the data (for status of ABS hydraulic unit) is not sent from the ABS hydraulic unit to the meter unit and ECU, the service code 1B is displayed.
○The data is sent through the CAN communication line.
○The service code 1B is detected with the meter unit.

○When the service code 1B is detected, the yellow ABS indicator light (LED) [A] and yellow warning indicator light (LED) [B] go on, white KIBS indicator light (LED) [C] blinks and the code of 1B [D] displayed on the LCD.

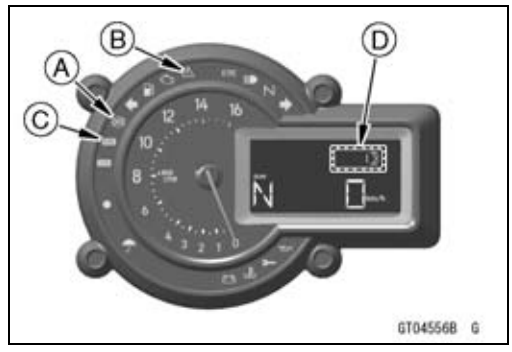

- Check the wiring for continuity between main harness connectors.
- Disconnect:
  ABS Hydraulic Unit Connector (see ABS Hydraulic Unit Removal in the Brakes chapter)
  Meter Unit Connector (see Meter Unit Removal in the Electrical System chapter)

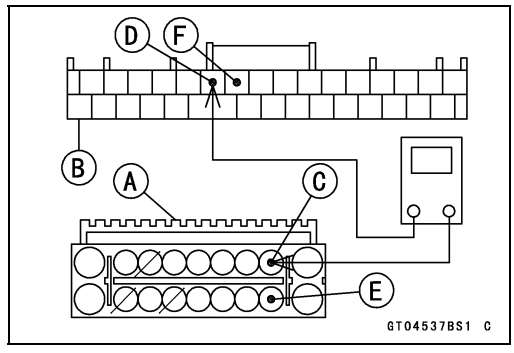

Wiring Continuity Inspection
ABS Hydraulic Unit Connector [A] ←→
Meter Unit Connector [B]
ABS Hydraulic Unit Terminal 2 [C] ←→ Meter Unit Terminal [D]
ABS Hydraulic Unit Terminal 11 [E] ←→ Meter Unit Terminal [F]

★If the wiring is good, replace the ABS hydraulic unit (see ABS Hydraulic Unit Removal/Installation in the Brakes chapter).

ABS Hydraulic Unit Communication Error (Service Code 1B)

ABS Hydraulic Unit Communication Line Circuit

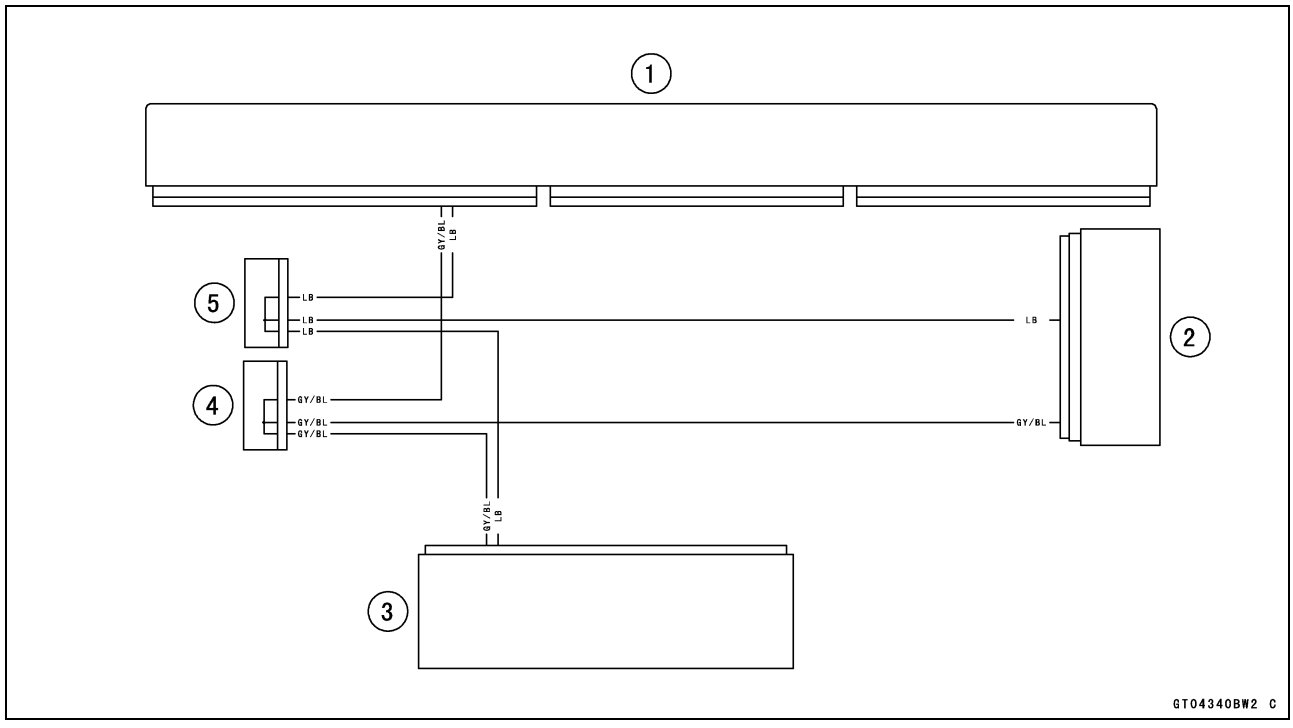

1. ECU
2. ABS Hydraulic Unit
3. Meter Unit
4. Joint Connector I
5. Joint Connector H

Crankshaft Sensor (Service Code 21) (DTC P0335)

When the engine stops, the crankshaft sensor generates no signals.

Crankshaft Sensor Removal/Installation

● Refer to the Crankshaft Sensor Removal/Installation in the Electrical System chapter.

Crankshaft Sensor Resistance Inspection

● Refer to the Crankshaft Sensor Inspection in the Electrical System chapter.

★If the reading is within the standard, check the peak voltage (see Crankshaft Sensor Peak Voltage Inspection).

Crankshaft Sensor Peak Voltage Inspection

● Refer to the Crankshaft Sensor Peak Voltage Inspection in the Electrical System chapter.

★If the reading is within the standard, remove the ECU and check the wiring for continuity between main harness connectors.

○Disconnect the ECU and sensor connectors.

Wiring Continuity Inspection
ECU Connector [A] ←→
Crankshaft Sensor Connector [B]
ECU Terminal 36 [C] ←→ Sensor Terminal [D]
ECU Terminal 37 [E] ←→ Sensor Terminal [F]

★If the wiring is good, check the ECU for its ground and power supply (see ECU Power Supply Inspection in the Fuel System (DFI) chapter).

★If the ground and power supply are good, replace the ECU (see ECU Removal/Installation in the Fuel System (DFI) chapter).

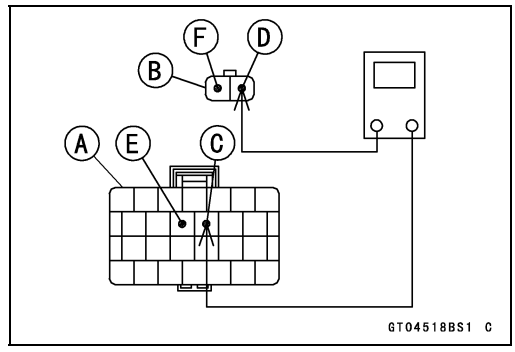

Crankshaft Sensor Circuit

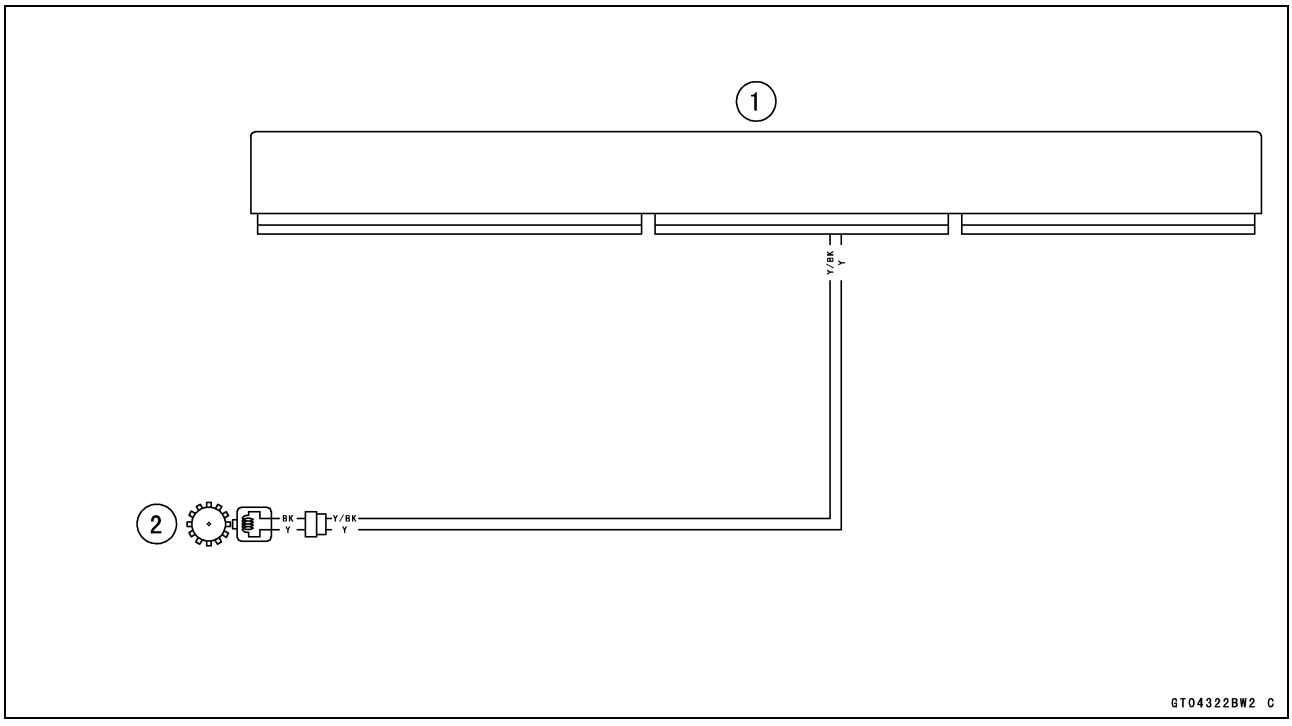

1. ECU
2. Crankshaft Sensor

Camshaft Position Sensor (Service Code 23) (DTC P0340)

The camshaft position sensor detects the position of the camshaft, and distinguishes the cylinder.

When the engine stops, the camshaft position sensor generates no signals.

Camshaft Position Sensor Removal/Installation

- Refer to the Camshaft Position Sensor Removal/Installation in the Electrical System chapter.

Camshaft Position Sensor Resistance Inspection

- Refer to the Camshaft Position Sensor Inspection in the Electrical System chapter.

★If the reading is within the standard, check the peak voltage (see Camshaft Position Sensor Peak Voltage Inspection).

Camshaft Position Sensor Peak Voltage Inspection

- Refer to the Camshaft Position Sensor Peak Voltage Inspection in the Electrical System chapter.

★If the reading is within the standard, remove the ECU and check the wiring for continuity between main harness connectors.

○Disconnect the ECU and sensor connectors.

Wiring Continuity Inspection

ECU Connector [A] ←→

Camshaft Position Sensor Connector [B]

ECU Terminal 35 [C] ←→ Sensor Terminal [D]

ECU Terminal 38 [E] ←→ Sensor Terminal [F]

★If the wiring is good, check the ECU for its ground and power supply (see ECU Power Supply Inspection in the Fuel System (DFI) chapter).

★If the ground and power supply are good, replace the ECU (see ECU Removal/Installation in the Fuel System (DFI) chapter).

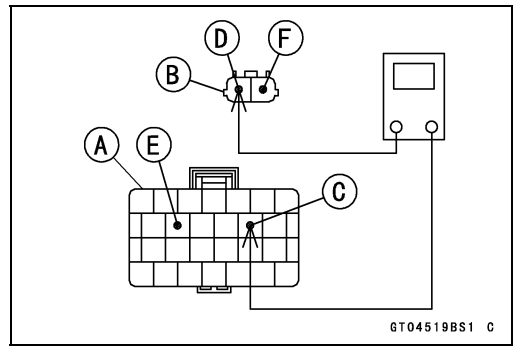

Camshaft Position Sensor (Service Code 23) (DTC P0340)

Camshaft Position Sensor Circuit

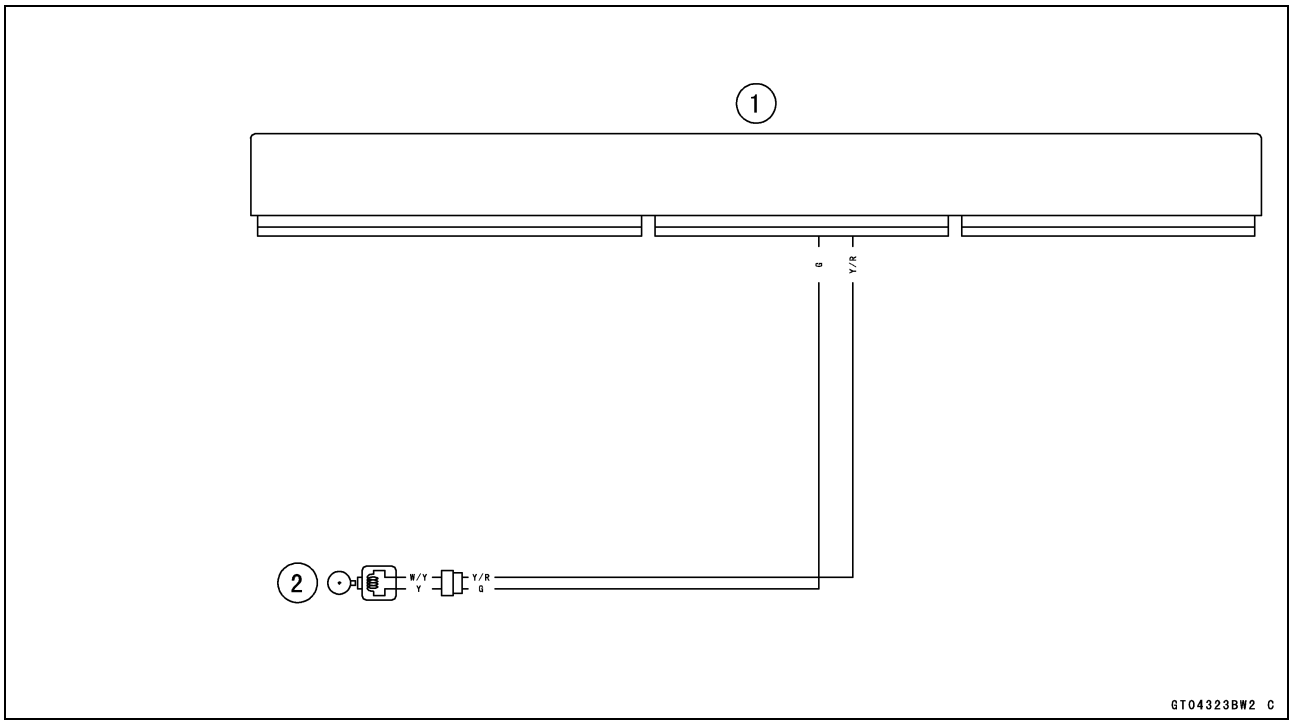

1. ECU
2. Camshaft Position Sensor

Rear Wheel Rotation Sensor Signal (Service Code 24) (DTC P2158)

Rear Wheel Rotation Sensor Signal Inspection

○The rear wheel rotation sensor sends the signal to the ECU through the ABS hydraulic unit.
○The ECU uses the rear wheel rotation sensor signal for motorcycle speed and KTRC.
○The service code 24 is detected with the ECU.
● Inspect the wheel rotation sensor air gap (see Wheel Rotation Sensor Air Gap Inspection in the Brakes chapter).
● Inspect the wheel rotation sensor rotor (see Wheel Rotation Sensor Rotor Inspection in the Brakes chapter).
● When the service code 24 and following service codes (for ABS) are displayed at the same time, inspect the rear wheel rotation sensor.
Service Code B44 (see Rear Wheel Rotation Sensor Signal Abnormal)
Service Code B45 (see Rear Wheel Rotation Sensor Wiring Inspection)

● When only service code 24 is displayed, do the following inspection procedures.
● Disconnect:
ECU Connectors (see ECU Removal in the Fuel System (DFI) chapter)
Rear Wheel Rotation Sensor Lead Connector (see Rear Wheel Rotation Sensor Removal in the Brakes chapter)
ABS Hydraulic Unit Connector (see ABS Hydraulic Unit Removal in the Brakes chapter)

● Check the wiring for continuity between harness connectors.

Wiring Continuity Inspection
ECU Connector [A] ← →
ABS Hydraulic Unit Connector [B]
ECU Terminal 68 [C] ← → ABS Hydraulic Unit Terminal 16 [D]

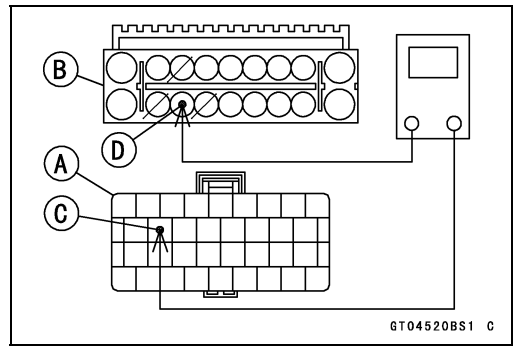

Wiring Continuity Inspection
ABS Hydraulic Unit Connector [A] ← →
Rear Wheel Rotation Sensor Connector [B]
ABS Hydraulic Unit Terminal 14 [C] ← → Sensor Terminal [D]
ABS Hydraulic Unit Terminal 13 [E] ← → Sensor Terminal [F]

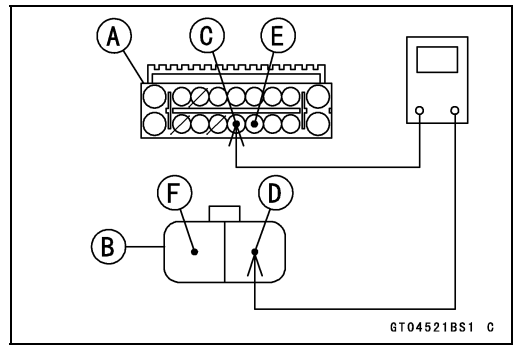

★If the wiring is good, check the ECU for its ground and power supply (see ECU Power Supply Inspection in the Fuel System (DFI) chapter).
★If the ground and power supply are good, replace the ECU (see ECU Removal/Installation in the Fuel System (DFI) chapter).

Rear Wheel Rotation Sensor Signal (Service Code 24) (DTC P2158)

Wheel Rotation Sensor Circuit

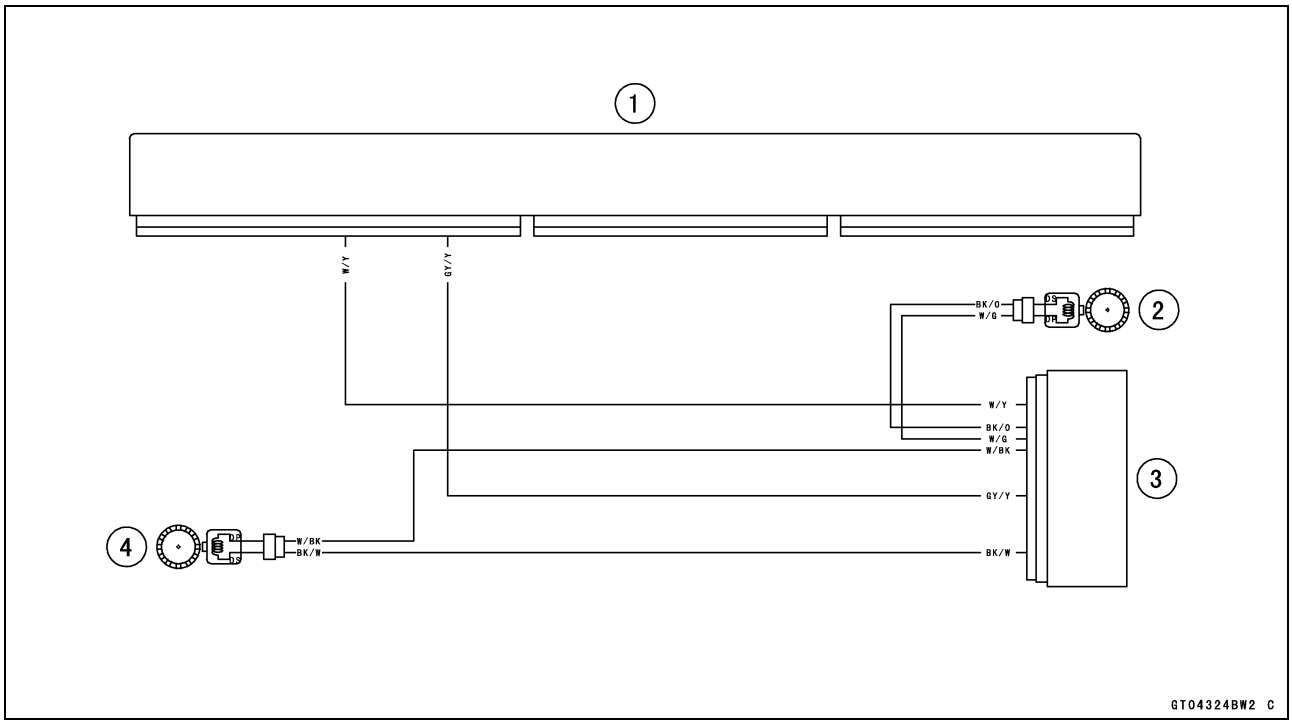

1. ECU
2. Rear Wheel Rotation Sensor
3. ABS Hydraulic Unit
4. Front Wheel Rotation Sensor

Gear Position Sensor (Service Code 25) (DTC P0914, P0917)

Gear Position Sensor Removal/Installation

● Refer to the Gear Position Sensor Removal/Installation in the Electrical System chapter.

Gear Position Sensor Input Voltage Inspection

NOTE

○*Be sure the battery is fully charged.*

● Turn the ignition switch off.
● Disconnect:
Gear Position Sensor Connector [A]

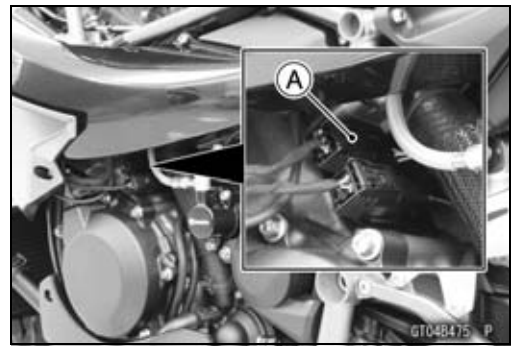

● Connect the measuring adapter [A] between the main harness connector and gear position sensor connector.
Main Harness [B]
Gear Position Sensor [C]

Special Tool - Measuring Adapter: 57001-1700

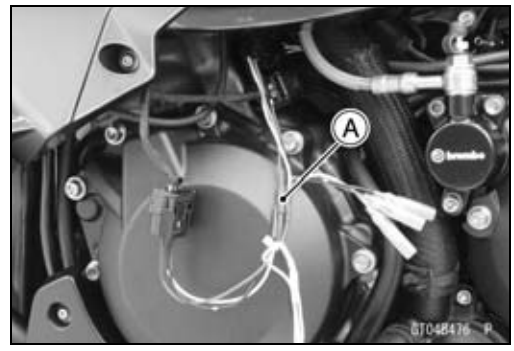

● Connect a digital meter [D] to the measuring adapter leads.

Gear Position Sensor Input Voltage
Connections to Adapter:
Digital Meter (+) → R (sensor BL/Y) lead
Digital Meter (–) → BK (sensor G) lead

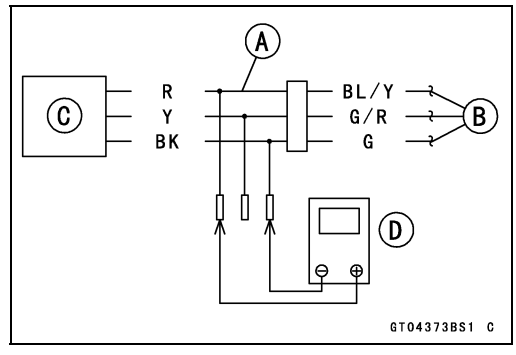

● Measure the input voltage with the engine stopped and with the connector joined.
● Turn the ignition switch on.

Input Voltage
Standard: DC 4.75 ~ 5.25 V

● Turn the ignition switch off.
★If the reading is within the standard, check the output voltage (see Gear Position Sensor Output Voltage Inspection).

★If the reading is out of the standard, remove the ECU and check the wiring for continuity between main harness connectors.
○Disconnect the ECU and sensor connectors.

Wiring Continuity Inspection
ECU Connector [A] ← →
Gear Position Sensor Connector [B]
ECU Terminal 49 [C] ←→ Sensor Terminal [D]
ECU Terminal 38 [E] ←→ Sensor Terminal [F]

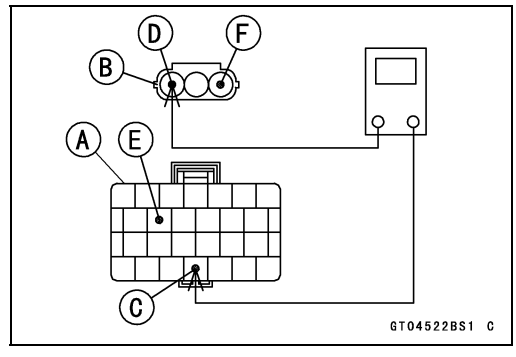

★If the wiring is good, check the ECU for its ground and power supply (see ECU Power Supply Inspection in the Fuel System (DFI) chapter).
★If the ground and power supply are good, replace the ECU (see ECU Removal/Installation in the Fuel System (DFI) chapter).

Gear Position Sensor (Service Code 25) (DTC P0914, P0917)

Gear Position Sensor Output Voltage Inspection

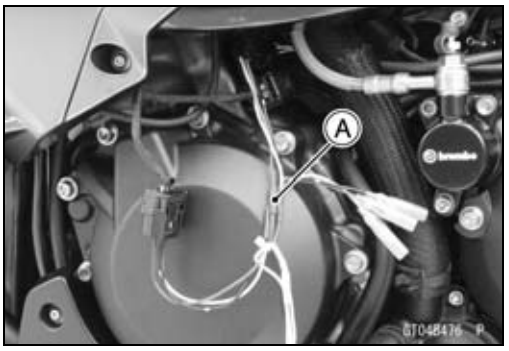

- Remove the gear position sensor (see Gear Position Sensor Removal in the Electrical System chapter).
- Measure the output voltage at the gear position sensor in the same way as input voltage inspection, note the following.

○Connect the measuring adapter [A] between these connectors.
Main Harness [B]
Gear Position Sensor [C]
Digital Meter [D]

Special Tool - Measuring Adapter: 57001-1700

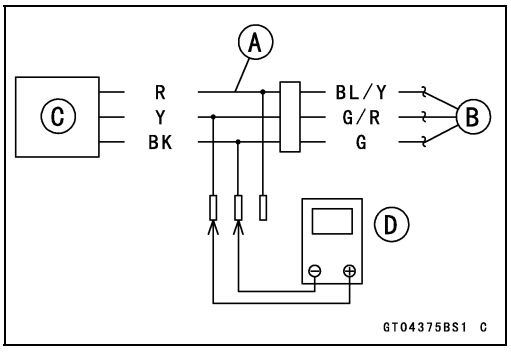

Gear Position Sensor Output Voltage
Connections to Adapter:
Digital Meter (+) → Y (sensor G/R) lead
Digital Meter (–) → BK (sensor G) lead

- Measure the output voltage with the engine stopped and with the connector joined.
- Turn the ignition switch on.

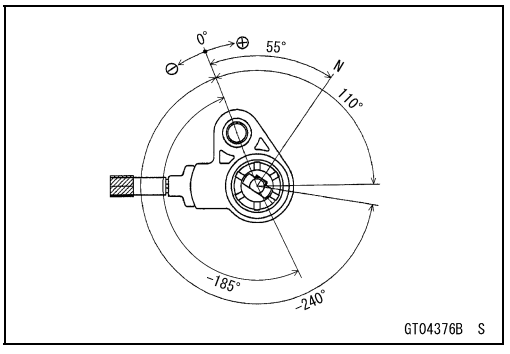

Output Voltage

Angle	Output Voltage (V)
–240°	0.40 ~ 0.60
–185°	1.03 ~ 1.23
+55°	3.82 ~ 3.92
+110°	4.40 ~ 4.60

NOTE

○*Rotate the gear position sensor, confirm the output voltage will be raise or lower.*

- Turn the ignition switch off.

★If the reading is out of the standard, replace the gear position sensor.

★If the reading is within the standard, remove the ECU and check the wiring for continuity between main harness connectors.

○Disconnect the ECU and sensor connectors.

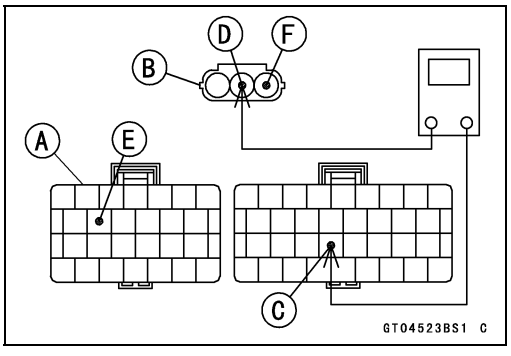

Wiring Continuity Inspection
ECU Connector [A] ← →
Gear Position Sensor Connector [B]
ECU Terminal 74 [C] ←→ Sensor Terminal [D]
ECU Terminal 38 [E] ←→ Sensor Terminal [F]

★If the wiring is good, check the ECU for its ground and power supply (see ECU Power Supply Inspection in the Fuel System (DFI) chapter).

★If the ground and power supply are good, replace the ECU (see ECU Removal/Installation in the Fuel System (DFI) chapter).

Gear Position Sensor (Service Code 25) (DTC P0914, P0917)

Gear Position Sensor Circuit

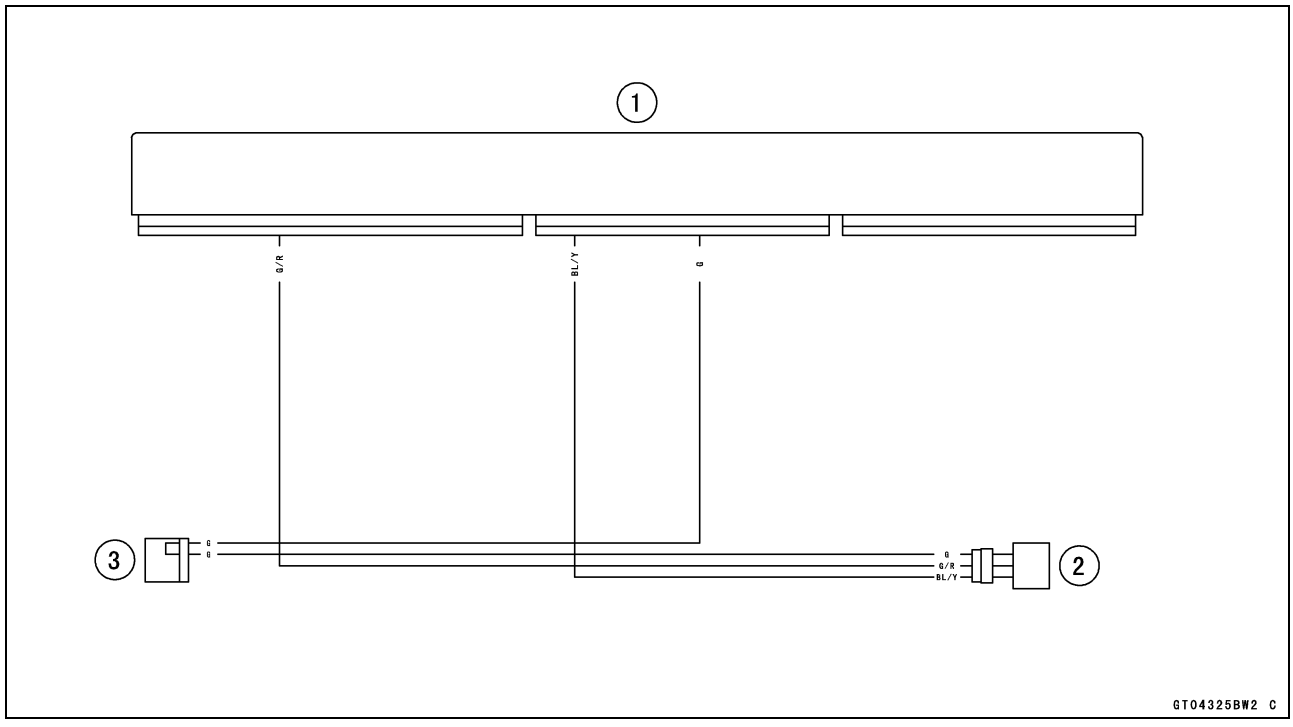

1. ECU
2. Gear Position Sensor
3. Joint Connector G

Front Wheel Rotation Sensor Signal (Service Code 27) (DTC P0500)

Front Wheel Rotation Sensor Signal Inspection

○The front wheel rotation sensor sends the signal to the ECU through the ABS hydraulic unit.
○The ECU uses the wheel rotation sensor signal for KTRC.
○The service code 27 is detected with the ECU.
● Inspect the wheel rotation sensor air gap (see Wheel Rotation Sensor Air Gap Inspection in the Brakes chapter).
● Inspect the wheel rotation sensor rotor (see Wheel Rotation Sensor Rotor Inspection in the Brakes chapter).
● When the service code 27 and following service codes (for ABS) are displayed at the same time, inspect the front wheel rotation sensor.
Service Code B42 (see Front Wheel Rotation Sensor Signal Abnormal)
Service Code B43 (see Front Wheel Rotation Sensor Wiring Inspection)

● When only service code 27 is displayed, do the following inspection procedures.
● Disconnect:
ECU Connectors (see ECU Removal in the Fuel System (DFI) chapter)
Front Wheel Rotation Sensor Lead Connector (see Front Wheel Rotation Sensor Removal in the Brakes chapter)
ABS Hydraulic Unit Connector (see ABS Hydraulic Unit Removal in the Brakes chapter)

● Check the wiring for continuity between harness connectors.

Wiring Continuity Inspection
ECU Connector [A] ← →
ABS Hydraulic Unit Connector [B]
ECU Terminal 59 [C] ← → ABS Hydraulic Unit Terminal 8 [D]

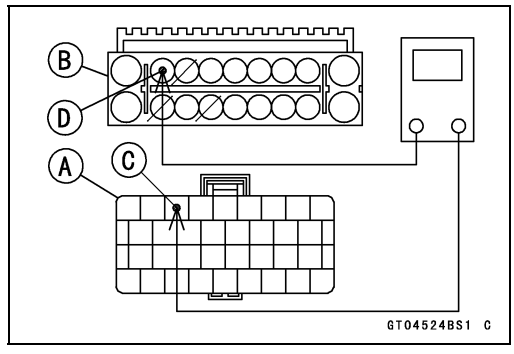

Wiring Continuity Inspection
ABS Hydraulic Unit Connector [A] ← →
Front Wheel Rotation Sensor Connector [B]
ABS Hydraulic Unit Terminal 12 [C] ← → Sensor Terminal [D]
ABS Hydraulic Unit Terminal 3 [E] ← → Sensor Terminal [F]

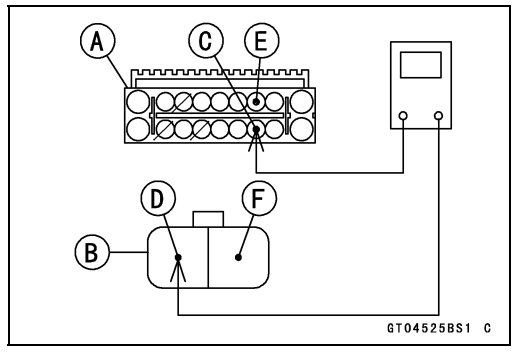

★If the wiring is good, check the ECU for its ground and power supply (see ECU Power Supply Inspection in the Fuel System (DFI) chapter).
★If the ground and power supply are good, replace the ECU (see ECU Removal/Installation in the Fuel System (DFI) chapter).

Front Wheel Rotation Sensor Signal (Service Code 27) (DTC P0500)

Wheel Rotation Sensor Circuit

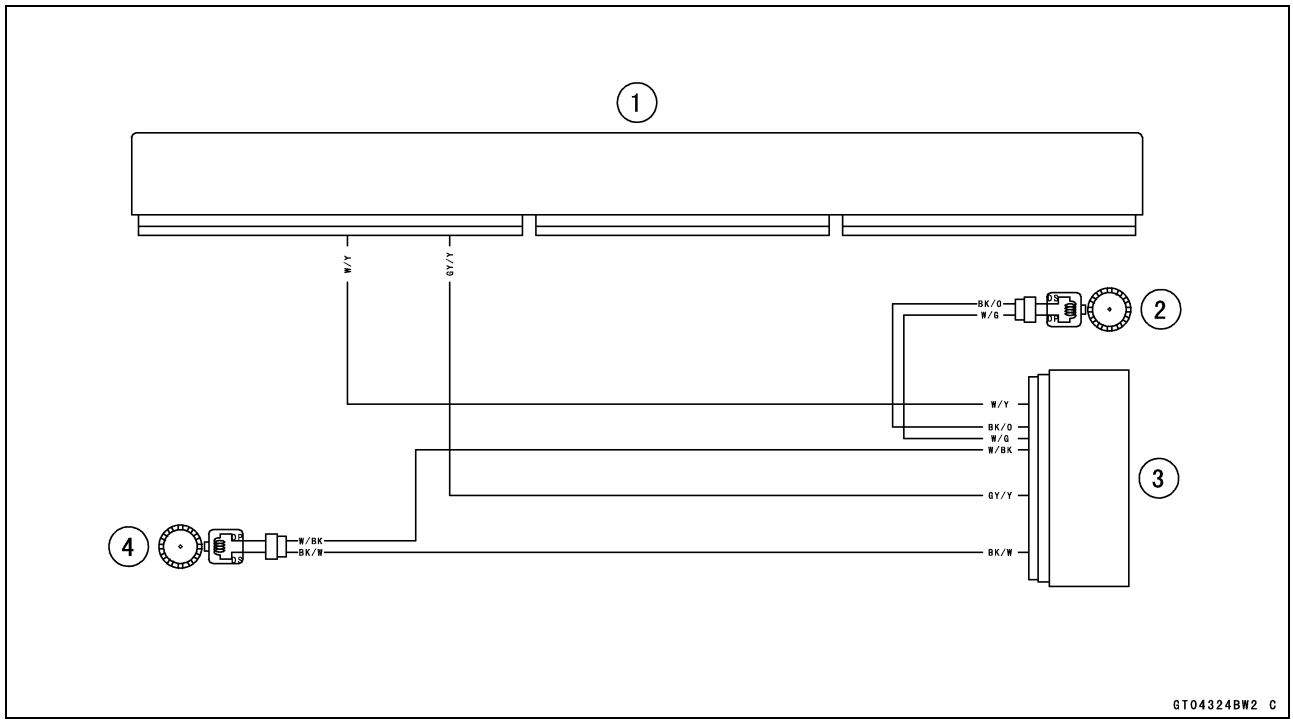

1. ECU
2. Rear Wheel Rotation Sensor
3. ABS Hydraulic Unit
4. Front Wheel Rotation Sensor

Vehicle-down Sensor (Service Code 31) (DTC C0064)

This sensor has a weight [A] with two magnets inside, and sends a signal to the ECU. But when the motorcycle banks 60 ~ 70° or more to either side (in fact falls down), the weight turns and the signal changes. The ECU senses this change, and stops the fuel pump relay, the fuel injectors and the ignition system.

Hall IC [B]

When the motorcycle is down, the ignition switch is left on. If the engine start/stop switch is slid, the electric starter turns but the engine does not start. To start the engine again, raise the motorcycle, turn the ignition switch off, and then turn it on.

Vehicle-down Sensor [A]
Ground Terminal [B]: G
Output Terminal [C]: Y/G
Power Source Terminal [D]: BL

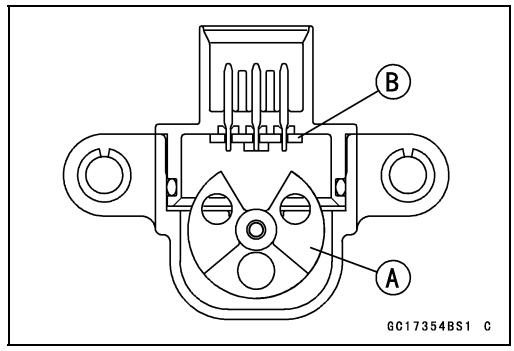

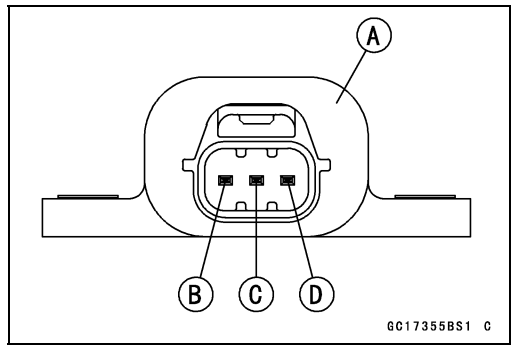

Vehicle-down Sensor Removal

NOTICE
Never drop the vehicle-down sensor especially on a hard surface. Such a shock to the sensor can damage it.

- Remove:
  Upper Fairing (see Upper Fairing Removal in the Frame chapter)
- Disconnect:
  Vehicle-down Sensor Connector [A]
- Remove:
  Vehicle-down Sensor Mounting Bolts [B] and Nuts
  Vehicle-down Sensor [C]

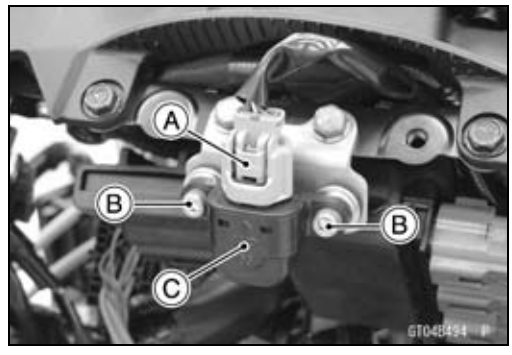

Vehicle-down Sensor Installation

- Be sure to install the rubber dampers [A] and collars [B] on the bracket.

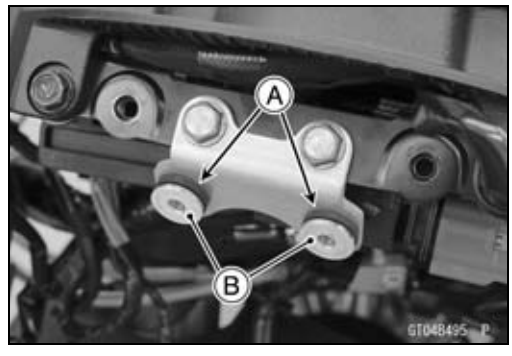

Vehicle-down Sensor (Service Code 31) (DTC C0064)

● The UP mark [A] of the sensor should face upward.

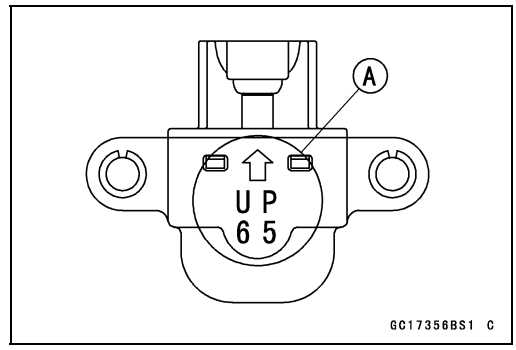

⚠ WARNING

Incorrect installation of the vehicle-down sensor could cause sudden loss of engine power. The rider could lose balance during certain riding situations for an accident resulting in injury or death. Ensure that the vehicle-down sensor is held in place by the sensor bracket.

● Tighten:

Torque - Vehicle-down Sensor Mounting Bolts: 5.9 N·m (0.60 kgf·m, 52 in·lb)

● Install the removed parts (see appropriate chapters).

Vehicle-down Sensor Input Voltage Inspection

NOTE

○*Be sure the battery is fully charged.*

● Turn the ignition switch off.

● Remove:
Upper Fairing (see Upper Fairing Removal in the Frame chapter)

● Disconnect the vehicle-down sensor connector and connect the measuring adapter [A] between these connectors as shown.
Main Harness [B]
Vehicle-down Sensor [C]

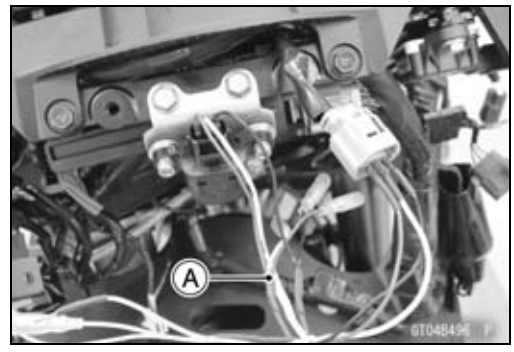

Special Tool - Measuring Adapter: 57001-1700

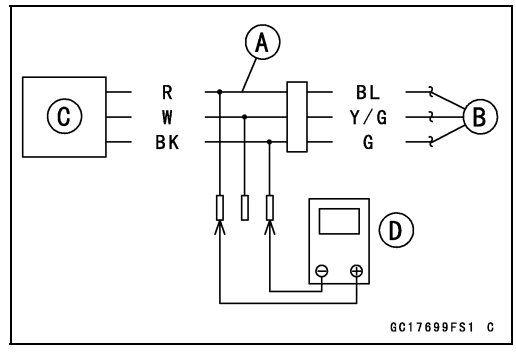

● Connect a digital meter [D] to the measuring adapter leads.

Vehicle-down Sensor Input Voltage
Connections to Adapter:
Digital Meter (+) → R (sensor BL) lead
Digital Meter (–) → BK (sensor G) lead

● Measure the input voltage with the engine stopped and with the connector joined.

● Turn the ignition switch on.

Input Voltage
Standard: DC 4.75 ~ 5.25 V

● Turn the ignition switch off.

★If the reading is within the standard, check the output voltage (see Vehicle-down Sensor Output Voltage Inspection).

Vehicle-down Sensor (Service Code 31) (DTC C0064)

★If the reading is out of the standard, remove the ECU and check the wiring for continuity between main harness connectors.

○Disconnect the ECU and sensor connectors.

Wiring Continuity Inspection
ECU Connector [A] ←→
Vehicle-down Sensor Connector [B]
ECU Terminal 44 [C] ←→ Sensor Terminal [D]
ECU Terminal 38 [E] ←→ Sensor Terminal [F]

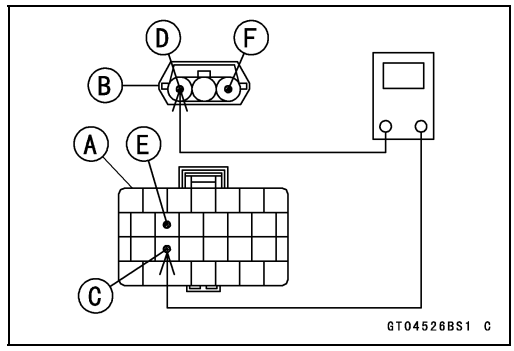

★If the wiring is good, check the ECU for its ground and power supply (see ECU Power Supply Inspection in the Fuel System (DFI) chapter).

★If the ground and power supply are good, replace the ECU (see ECU Removal/Installation in the Fuel System (DFI) chapter).

Vehicle-down Sensor Output Voltage Inspection

- Remove the vehicle-down sensor (see Vehicle-down Sensor Removal).
- Connect the measuring adapter [A] to the vehicle-down sensor connectors as shown.
  Main Harness [B]
  Vehicle-down Sensor [C]

Special Tool - Measuring Adapter: 57001-1700

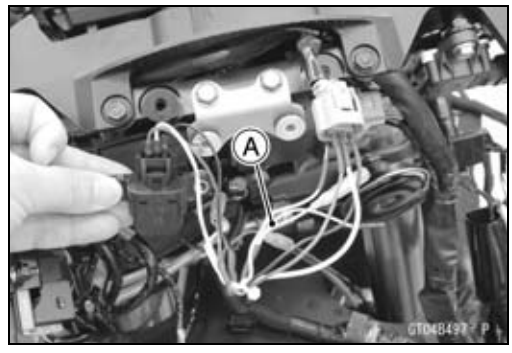

- Connect a digital meter [D] to the measuring adapter leads.

Vehicle-down Sensor Output Voltage
Connections to Adapter:
Digital Meter (+) → W (sensor Y/G) lead
Digital Meter (–) → BK (sensor G) lead

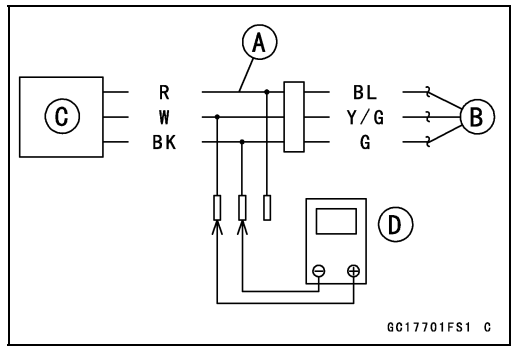

Vehicle-down Sensor (Service Code 31) (DTC C0064)

- Hold the sensor vertically.
- Measure the output voltage with the engine stopped and with the connector joined.
- Turn the ignition switch on.
- Tilt the sensor 60 ~ 70° or more [A] right or left, then hold the sensor almost vertical with the arrow mark pointed up [B], and measure the output voltage.

Output Voltage
Standard: With sensor tilted 60 ~ 70° or more right or left: DC 0.65 ~ 1.35 V
With sensor arrow mark pointed up: DC 3.55 ~ 4.45 V

- Turn the ignition switch off.

★If the reading is out of the standard, replace the sensor.

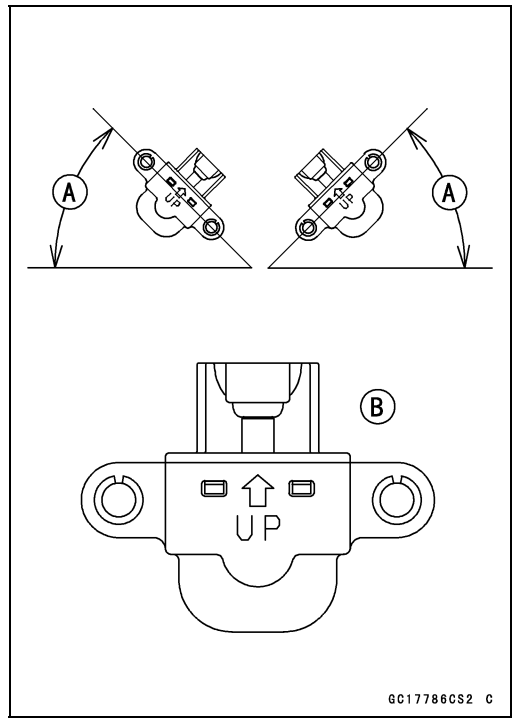

★If the reading is within the standard, remove the ECU and check the wiring for continuity between main harness connectors.

○Disconnect the ECU and sensor connectors.

Wiring Continuity Inspection
ECU Connector [A] ←→
Vehicle-down Sensor Connector [B]
ECU Terminal 75 [C] ←→ Sensor Terminal [D]
ECU Terminal 38 [E] ←→ Sensor Terminal [F]

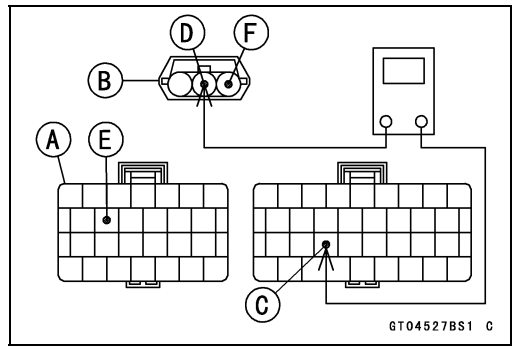

★If the wiring is good, check the ECU for its ground and power supply (see ECU Power Supply Inspection in the Fuel System (DFI) chapter).

★If the ground and power supply are good, replace the ECU (see ECU Removal/Installation in the Fuel System (DFI) chapter).

Vehicle-down Sensor (Service Code 31) (DTC C0064)

Vehicle-down Sensor Circuit

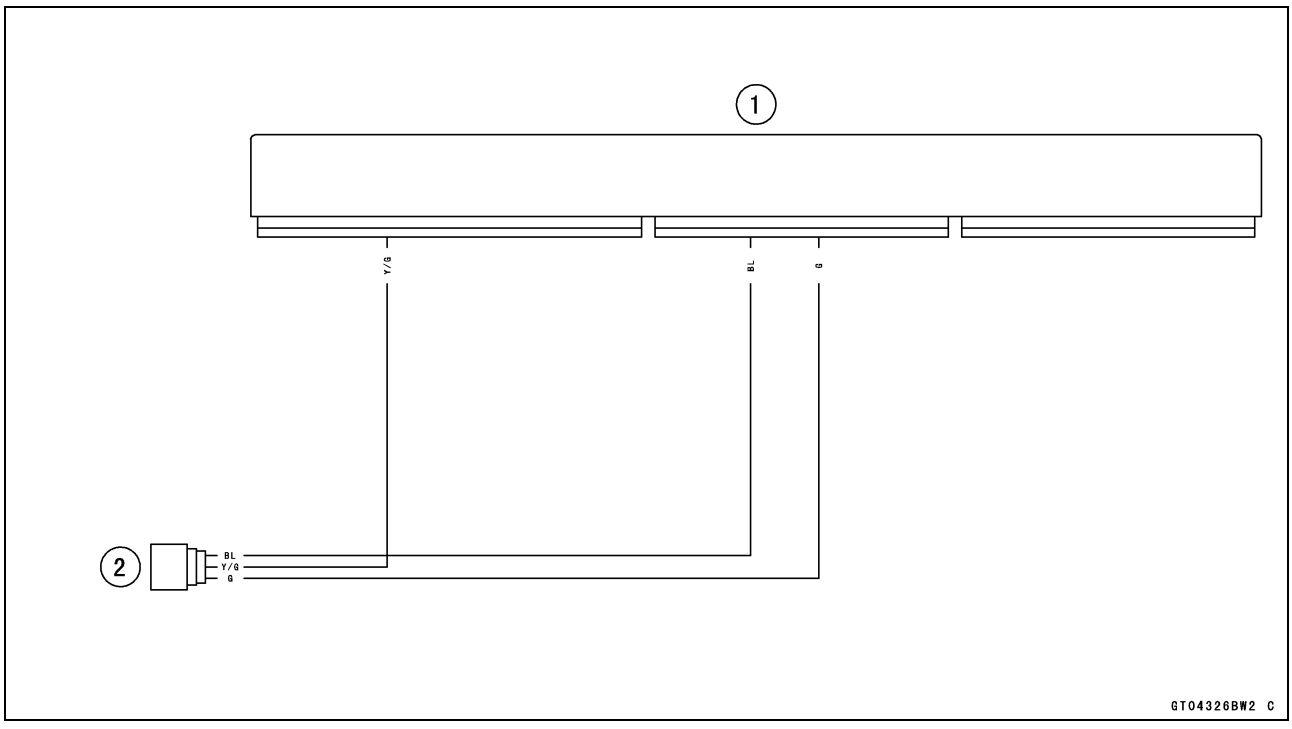

1. ECU
2. Vehicle-down Sensor

Oxygen Sensor - not activated (Service Code 33) (DTC P0130, P0132)

Oxygen Sensor Removal/Installation

● Refer to the Oxygen Sensor Removal/Installation in the Electrical System chapter.

Oxygen Sensor Inspection

● Remove:
Fuel Tank (see Fuel Tank Removal in the Fuel System (DFI) chapter)
● Remove the oxygen sensor lead connector [A] from the bracket [B].
● Disconnect:
Oxygen Sensor Lead Connector

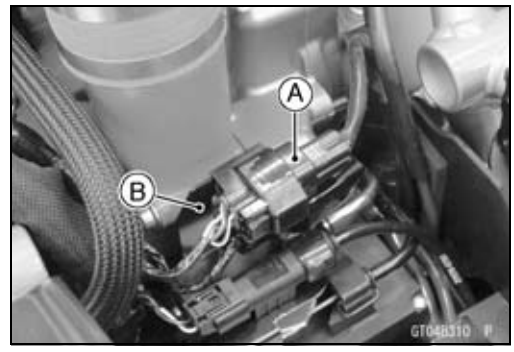

● Connect the measuring adapter [A] between the main harness connector and oxygen sensor lead connector.
Main Harness [B]
Oxygen Sensor [C]

Special Tool - Measuring Adapter: 57001-1700

● Connect a digital meter [D] to the measuring adapter leads.

Oxygen Sensor Output Voltage
Connections to Adapter:
Digital Meter (+) → R (sensor BK) lead
Digital Meter (−) → BK (sensor GY) lead

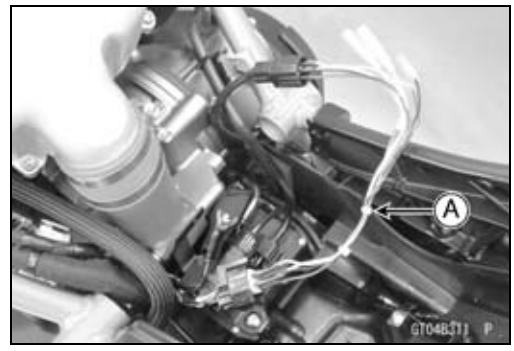

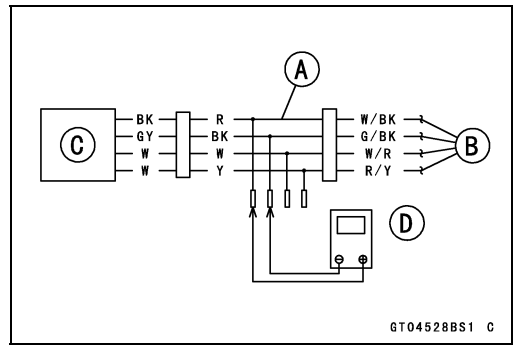

● Remove the air switching valve [A] (see Air Switching Valve Removal in the Engine Top End chapter).
○Do not disconnect the air switching valve connector [B].

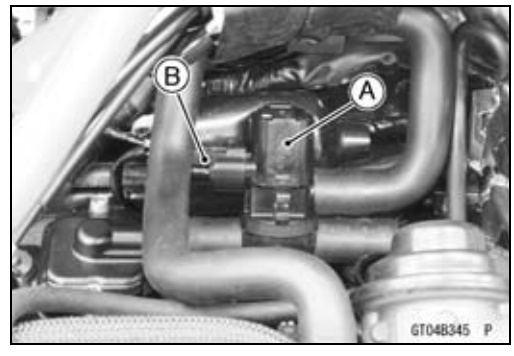

Oxygen Sensor - not activated (Service Code 33) (DTC P0130, P0132)

- Install the suitable plugs [A] on the fitting of the air suction valve covers, and shut off the secondary air.
- Install the fuel tank temporarily (see Fuel Tank Installation in the Fuel System (DFI) chapter).

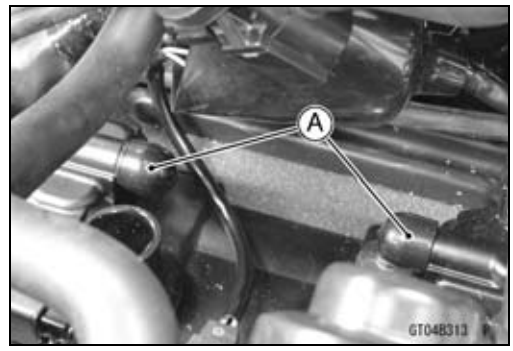

- Warm up the engine thoroughly until the radiator fan starts.
- Measure the output voltage with the connector joined.
  Measuring Adapter [A]

Output Voltage (with Plugs, Rich)
Standard: DC 0.8 V or more



- Turn the ignition switch off.
- Remove the fuel tank (see Fuel Tank Removal in the Fuel System (DFI) chapter).
- Remove the plugs from the fittings [A].

⚠ WARNING

The engine gets extremely hot during normal operation and can cause serious burns. Never touch a hot engine.

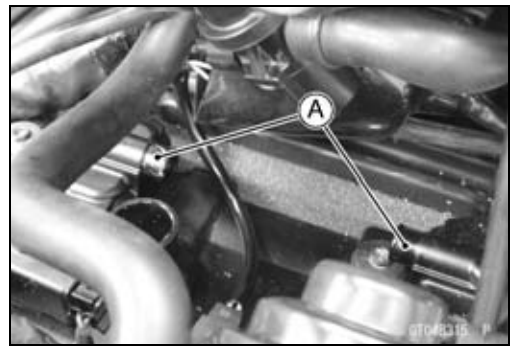

- Install the fuel tank temporarily (see Fuel Tank Installation in the Fuel System (DFI) chapter).
- Start the engine, and let it idle.
- Measure the output voltage with the connector joined.

Output Voltage (without Plugs, Lean)
Standard: DC 0.24 V or less

- Turn the ignition switch off.

Oxygen Sensor - not activated (Service Code 33) (DTC P0130, P0132)

★If the reading is out of the standard (with plugs: DC 0.8 V or more, without plugs: DC 0.24 V or less), remove the ECU and check the wiring for continuity between main harness connectors.

○Disconnect the ECU and sensor connectors.

Wiring Continuity Inspection

ECU Connectors [A] ←→

Oxygen Sensor Connector [B]

ECU Terminal 84 [C] ←→ Sensor Terminal [D]

ECU Terminal 85 [E] ←→ Sensor Terminal [F]

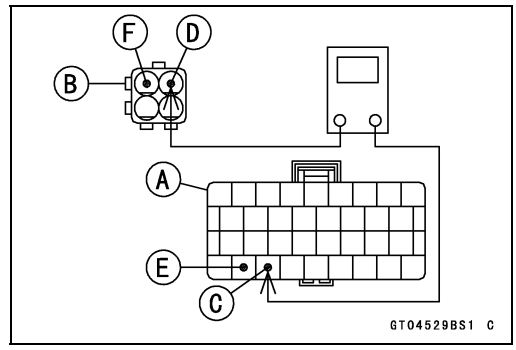

★If the wiring is good, replace the sensor.

★If the reading is within the standard (with plugs: DC 0.8 V or more, without plugs: DC 0.24 V or less), check the ECU for its ground and power supply (see ECU Power Supply Inspection in the Fuel System (DFI) chapter).

★If the ground and power supply are good, replace the ECU (see ECU Removal/Installation in the Fuel System (DFI) chapter).

Oxygen Sensor Circuit

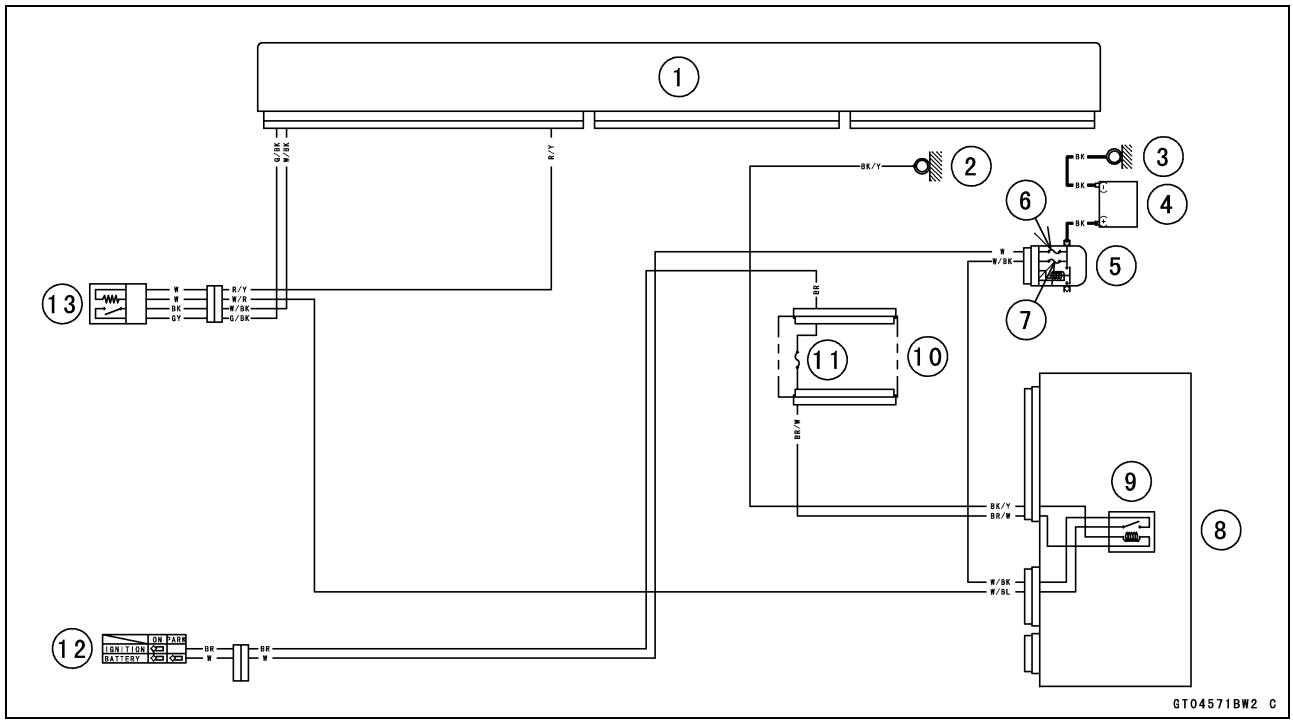

1. ECU
2. Frame Ground (2)
3. Engine Ground
4. Battery 12 V 8.6 Ah
5. Starter Relay
6. Main Fuse 30 A
7. ECU Fuse 15 A
8. Relay Box
9. ECU Main Relay
10. Fuse Box (1)
11. Ignition Fuse 15 A
12. Ignition Switch
13. Oxygen Sensor

Exhaust Butterfly Valve Actuator Sensor (Service Code 34) (DTC P048B, P048E)

Exhaust Butterfly Valve Actuator Sensor Removal/Installation

The exhaust butterfly valve actuator sensor is built in the exhaust butterfly valve actuator. So, the sensor itself can not be removed. Remove the exhaust butterfly valve actuator (see Exhaust Butterfly Valve Actuator Removal in the Engine Top End chapter).

Exhaust Butterfly Valve Actuator Sensor Input Voltage Inspection

NOTE

○*Be sure the battery is fully charged.*

- Turn the ignition switch off.
- Remove the fuel tank (see Fuel Tank Removal in the Fuel System (DFI) chapter).
- Open the clamp [A].
- Slide the dust cover [B].

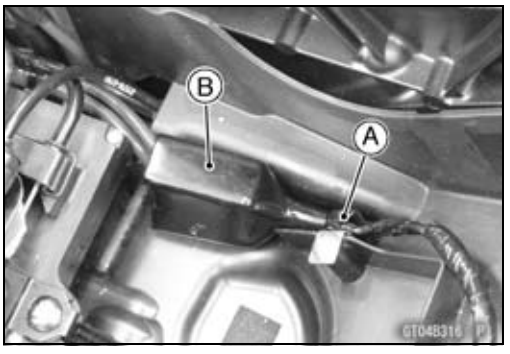

- Disconnect the exhaust butterfly valve actuator sensor lead connector (3 pins connector) and connect the setting adapter [A] between these connectors.

Special Tool - Throttle Sensor Setting Adapter #1: 57001 -1400



- Connect a digital meter to the setting adapter leads.

Exhaust Butterfly Valve Actuator Sensor Input Voltage Connections to Adapter:

Digital Meter (+) → Y/W (actuator W) lead

Digital Meter (−) → BK/BL (actuator BK) lead

- Measure the input voltage with the engine stopped and with the connector joined.
- Turn the ignition switch on.

Input Voltage

Standard: DC 4.75 ~ 5.25 V

- Turn the ignition switch off.

★If the reading is within the standard, check the output voltage (see Exhaust Butterfly Valve Actuator Sensor Output Voltage Inspection).

★If the reading is out of the standard, remove the ECU and check the wiring for continuity between main harness connectors.

○Disconnect the ECU and sensor connectors.

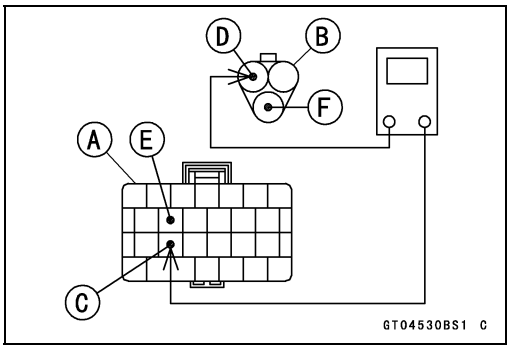

Wiring Continuity Inspection

ECU Connector [A] ←→

Exhaust Butterfly Valve Actuator Sensor Connector [B]

ECU Terminal 44 [C] ←→ Sensor Terminal [D]

ECU Terminal 38 [E] ←→ Sensor Terminal [F]

★If the wiring is good, check the ECU for its ground and power supply (see ECU Power Supply Inspection in the Fuel System (DFI) chapter).

★If the ground and power supply are good, replace the ECU (see ECU Removal/Installation in the Fuel System (DFI) chapter).

Exhaust Butterfly Valve Actuator Sensor (Service Code 34) (DTC P048B, P048E)

Exhaust Butterfly Valve Actuator Sensor Output Voltage Inspection

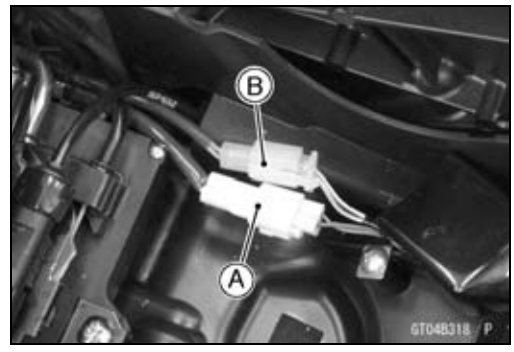

NOTE

○*Before this inspection, confirm the pulley is original position (see Exhaust Butterfly Valve Cable Installation in the Engine Top End chapter).*

- Disconnect:
  3 Pins Connector [A]
  2 Pins Connector [B]



- Connect the setting adapter [A] between the 3 pins connectors.

Special Tool - Throttle Sensor Setting Adapter #1: 57001 -1400

- Connect a digital meter to the setting adapter leads.

Exhaust Butterfly Valve Actuator Sensor Output Voltage Connections to Adapter:

Digital Meter (+) → BL (actuator Y) lead

Digital Meter (−) → BK/BL (actuator BK) lead

- Measure the output voltage at the 3 pins connector of the exhaust butterfly valve actuator when the pulley is original position.
- Turn the ignition switch on.

Output Voltage

Standard: DC 3.46 ~ 3.76 V at pulley original position

- Turn the ignition switch off.

★If the reading is out of the standard, check the exhaust butterfly valve actuator sensor resistance (see Exhaust Butterfly Valve Actuator Sensor Resistance Inspection).

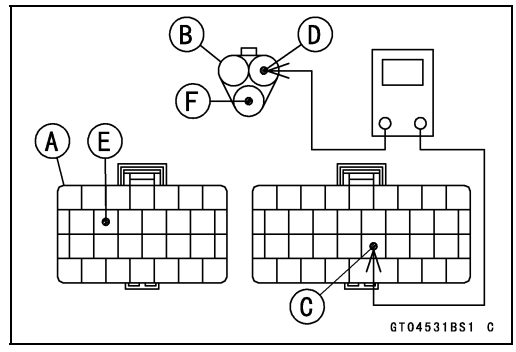

★If the reading is within the standard, remove the ECU and check the wiring for continuity between main harness connectors.

○Disconnect the ECU and sensor connectors.

Wiring Continuity Inspection

ECU Connector [A] ←→

Exhaust Butterfly Valve Actuator Sensor Connector [B]

ECU Terminal 73 [C] ←→ Sensor Terminal [D]

ECU Terminal 38 [E] ←→ Sensor Terminal [F]

★If the wiring is good, check the ECU for its ground and power supply (see ECU Power Supply Inspection in the Fuel System (DFI) chapter).

★If the ground and power supply are good, replace the ECU (see ECU Removal/Installation in the Fuel System (DFI) chapter).

Exhaust Butterfly Valve Actuator Sensor (Service Code 34) (DTC P048B, P048E)

Exhaust Butterfly Valve Actuator Sensor Resistance Inspection

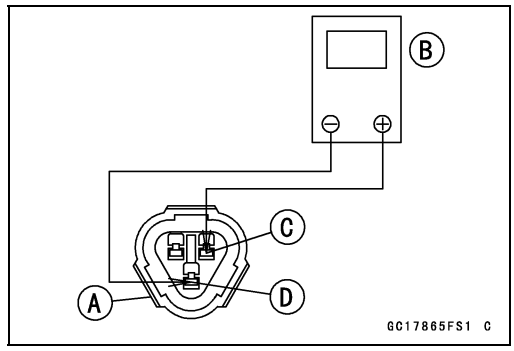

- Turn the ignition switch off.
- Disconnect the exhaust butterfly valve actuator sensor connector (3 pins connector) [A] (see Exhaust Butterfly Valve Actuator Sensor Input Voltage Inspection).
- Connect a digital meter [B] to the exhaust butterfly valve actuator sensor connector.
- Measure the exhaust butterfly valve actuator sensor resistance.

Exhaust Butterfly Valve Actuator Sensor Resistance
Connections: W lead [C] ←→ BK lead [D]
Standard: 4 ~ 6 kΩ

★If the reading is out of the standard, replace the exhaust butterfly valve actuator.
★If the reading within the standard, but the problem still exists, replace the ECU (see ECU Removal/Installation in the Fuel System (DFI) chapter).

Exhaust Butterfly Valve Actuator Sensor Circuit

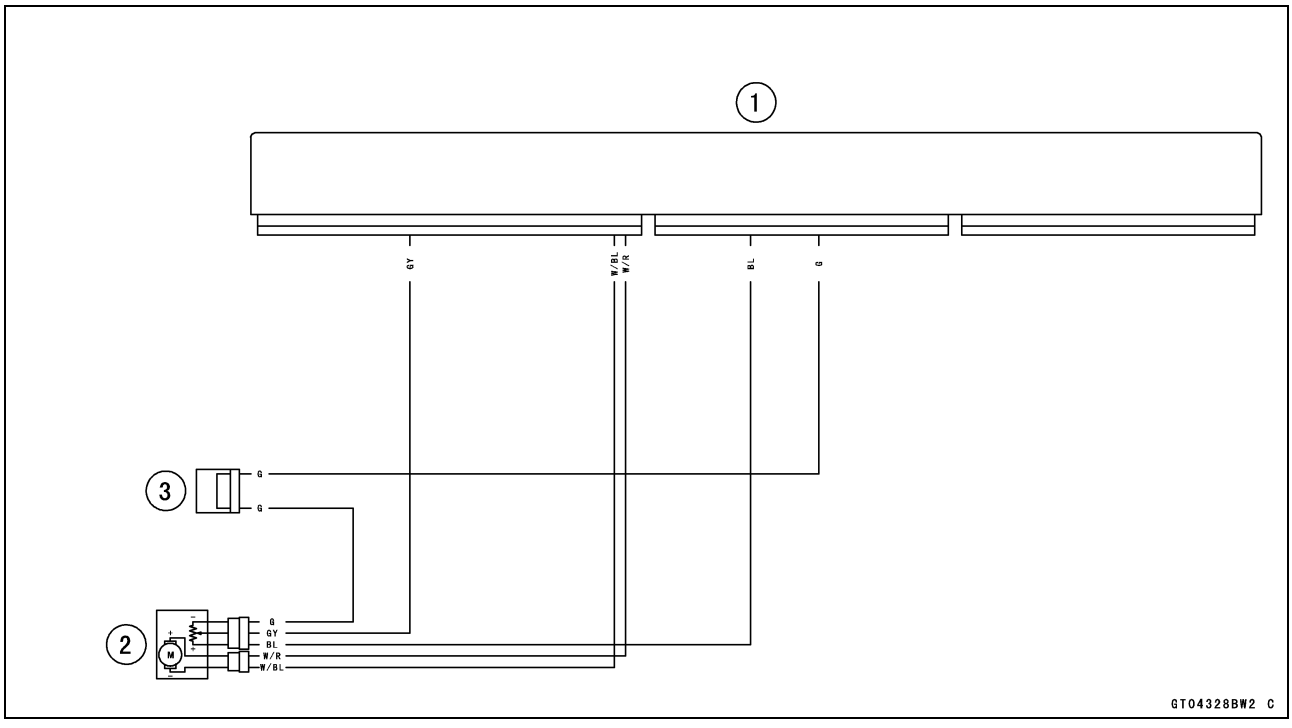

1. ECU
2. Exhaust Butterfly Valve Actuator
3. Joint Connector G

Immobilizer Amplifier (Service Code 35, Equipped Models)

Antenna Resistance Inspection

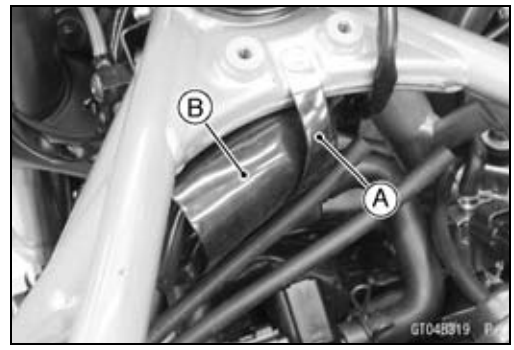

- Turn the ignition switch off.
- Remove the fuel tank (see Fuel Tank Removal in the Fuel System (DFI) chapter).
- For other than US, CA models, remove the canister (see Evaporative Emission Control System Inspection (Other than US, CA Models) in the Periodic Maintenance chapter).
- US and CA models, open the clamp [A].
- Slide the dust cover [B].

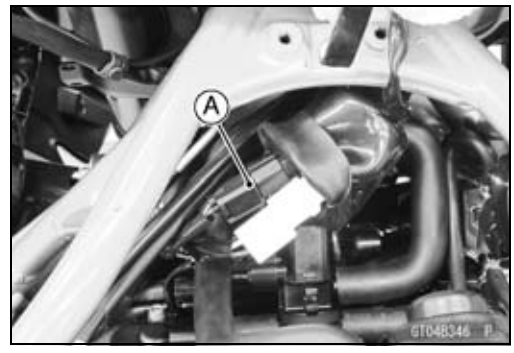

- Disconnect the antenna lead connector [A].
- Measure the antenna resistance.

Antenna Resistance
Connections: BK lead ←→ BK/W lead
Standard: About 3.0 ~ 4.6 Ω

★If the reading is out of the standard, replace the ignition switch (see Immobilizer System Parts Replacement in the Electrical System chapter).
★If the reading is within the standard, check the wiring to the amplifier (see Immobilizer System Circuit).
★If the wiring is good, check the input voltage of the amplifier (see Amplifier Input Voltage Inspection).

Amplifier Input Voltage Inspection

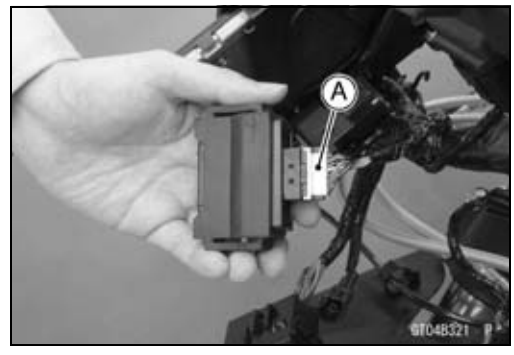

NOTE

○*Be sure the battery is fully charged.*

- Turn the ignition switch off.
- Remove the immobilizer amplifier (see Immobilizer System Parts Replacement in the Electrical System chapter).
- Connect the amplifier connector [A].
- Connect a digital meter [B] to the amplifier connector with needle adapter set.

Special Tool - Needle Adapter Set: 57001-1457

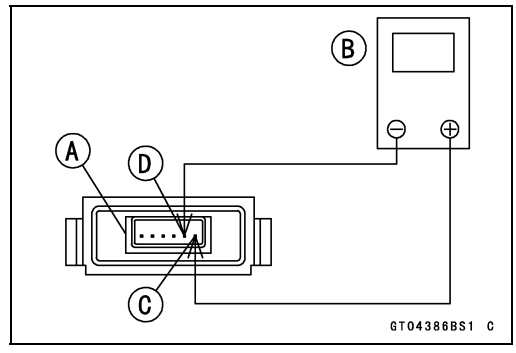

Amplifier Input Voltage
Connections to Amplifier Connector:
Digital Meter (+) → BR/W [C] lead
Digital Meter (–) → BK/Y [D] lead

- Measure the input voltage with the engine stopped and with the connector joined.
- Turn the ignition switch on.

Input Voltage
Standard: Battery Voltage

- Turn the ignition switch off.

★If the reading is out of the standard, check the wiring (see Immobilizer System Circuit).
★If the reading is within the standard, check the wiring to ECU (see Immobilizer System Circuit).
★If the wiring is good, replace the immobilizer amplifier (see Immobilizer System Parts Replacement in the Electrical System chapter).

Blank Key Detection (Service Code 36, Equipped Models)

- This code appears in the following conditions.

○The transponder [A] in the ignition key is malfunction.
○When the spare key of unregistration is used.
○When the ignition key is registered in the registered ECU.

- Therefore, the service code 36 will disappear when the above issue is solved.



Ignition Key Inspection

- Register the ignition key correctly (see Key Registration in the Electrical System chapter).

★If the service code 36 appears again, the transponder in the key is malfunction, replace it.

Immobilizer System Circuit

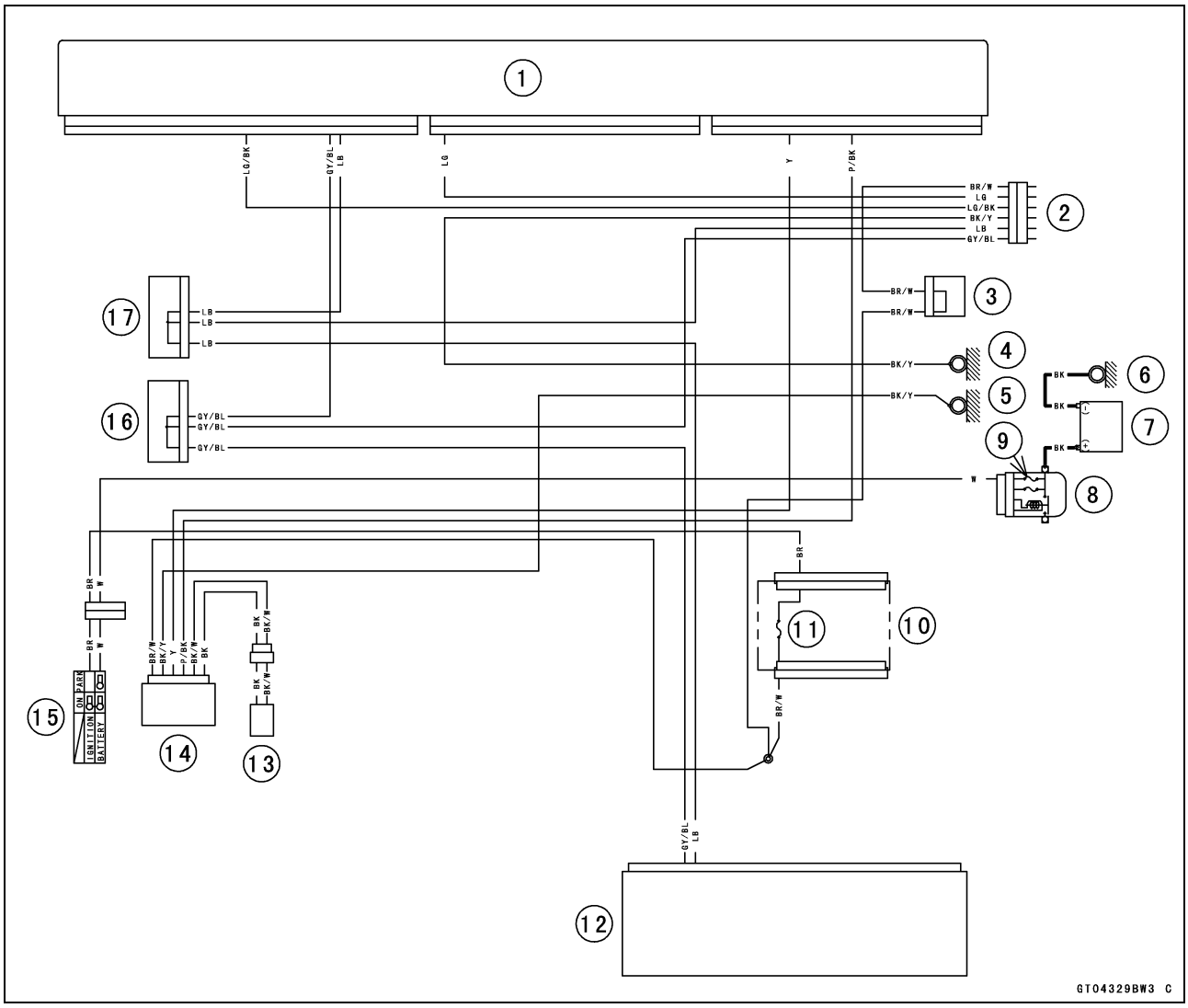

1. ECU
2. Immobilizer/Kawasaki Diagnostic System Connector
3. Joint Connector F
4. Frame Ground (4)
5. Frame Ground (1)
6. Engine Ground
7. Battery 12 V 8.6 Ah
8. Starter Relay
9. Main Fuse 30 A
10. Fuse Box (1)
11. Ignition Fuse 15 A
12. Meter Unit
13. Immobilizer Antenna
14. Immobilizer Amplifier
15. Ignition Switch
16. Joint Connector I
17. Joint Connector H

ECU Communication Error (Service Code 39) (DTC U0001)

ECU Communication Line Inspection

○When the data is not sent from the ECU to the meter unit for more than about 5 seconds, the service code 39 is displayed.
○The data is sent through the CAN communication line.
○The service code 39 is detected with the meter unit.

○When the user mode, this communication error go on or blink the following items.
Yellow Engine Warning Indicator Light (LED) [A]
Yellow Warning Indicator Light (LED) [B]
KEBC Indicator [C]
KQS Indicator [D]
White Rain Mode Indicator Light (LED) [E]

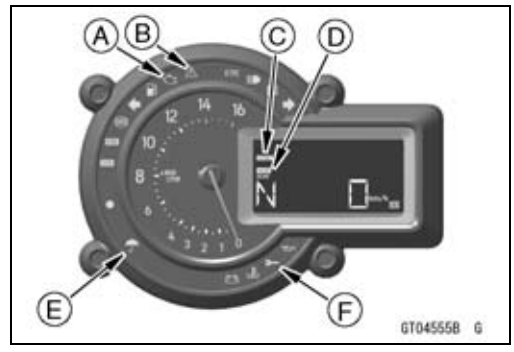

- Remove the ECU, and inspect the CAN communication line resistance.
- Connect a digital meter [A] to the ECU connector [B].
- Measure the resistance of the CAN communication line resistor.

CAN Communication Line Resistance (at ECU Connector)
Connections: Terminal 60 ←→Terminal 61
Standard: 123 ~ 125 Ω

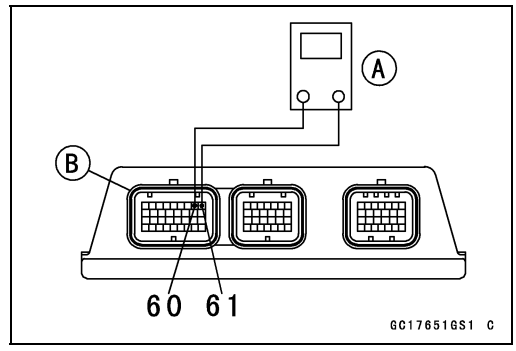

★If the reading is out of the standard, replace the ECU.
★If the reading is within the standard, resistor of the ECU for CAN communication line is normal. Check the wiring according following procedure.

- Remove the ECU and meter unit, and check the wiring for continuity between main harness connectors.

○Disconnect the ECU and meter unit connectors.

Wiring Continuity Inspection
ECU Connector [A] ←→ Meter Unit Connector [B]
ECU Terminal 60 [C] ←→ Meter Unit Terminal [D]
ECU Terminal 61 [E] ←→ Meter Unit Terminal [F]

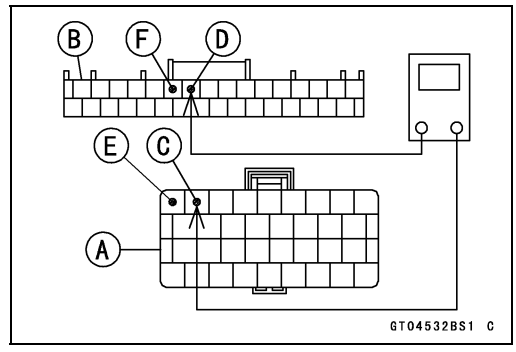

★If the wiring is good, check the meter unit (see Meter Unit Inspection in the Electrical System chapter).
★If the meter unit is normal, replace the ECU (see ECU Removal/Installation in the Fuel System (DFI) chapter).

ECU Communication Error (Service Code 39) (DTC U0001)

ECU Communication Line Circuit

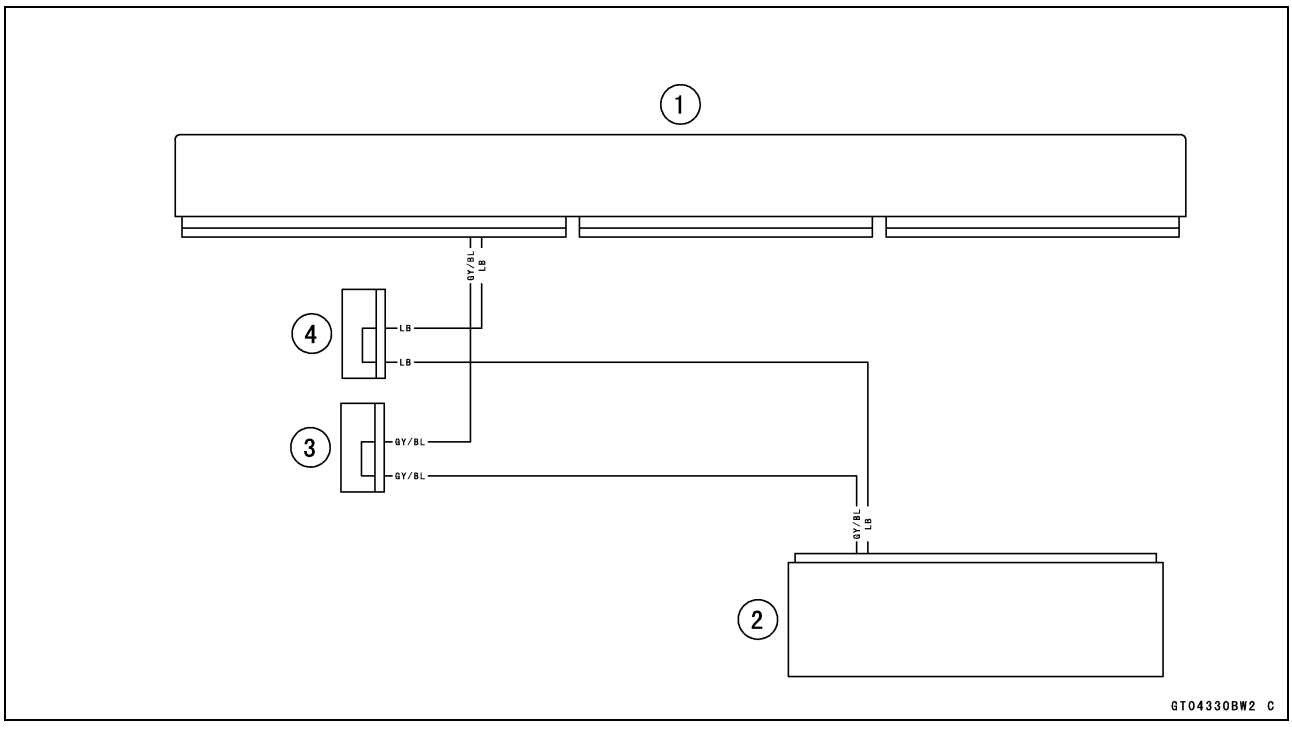

1. ECU
2. Meter Unit
3. Joint Connector I
4. Joint Connector H

Purge Valve (Service Code 3A, Other than US and CA Models) (DTC P0443)

Purge Valve Removal/Installation

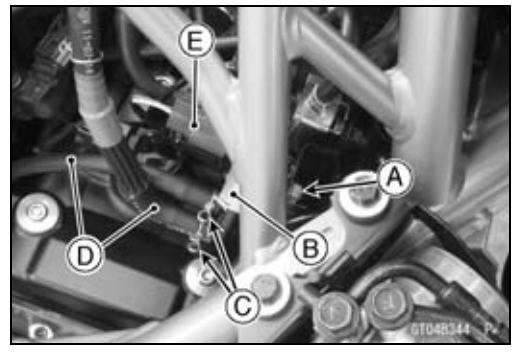

- Remove:
  Canister (see Evaporative Emission Control System Inspection (Other than US, CA Models) in the Periodic Maintenance chapter).
  Nut [A]
- Remove the purge valve [B] from the bracket.
- Slide the clamps [C].
- Disconnect:
  Hoses [D]
  Purge Valve Connector [E]
- Installation is the reverse of removal.
- Run the hoses correctly (see Cable, Wire, and Hose Routing section in the Appendix chapter).

Purge Valve Inspection

- Remove the purge valve (see Purge Valve Removal/Installation).
- Connect a digital meter [A] to the purge valve terminals as shown.

Purge Valve Resistance
Standard: 22 ~ 26 Ω @20°C (68°F)

★If the resistance reading is out of the specified value, replace it with a new one.

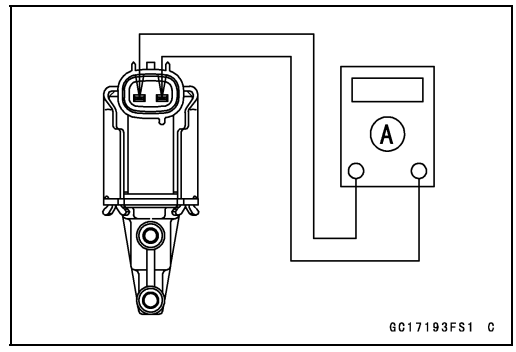

- Connect the 12 V battery [A] to the purge valve terminals as shown.

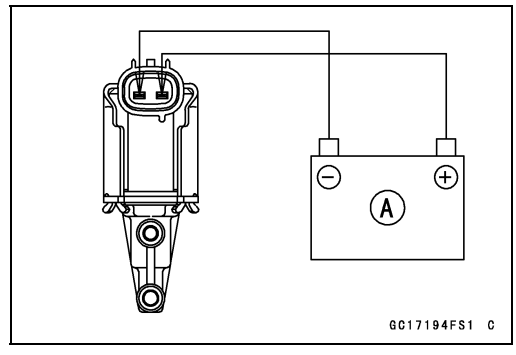

- Blow the air to the intake air duct [A], and make sure that the air flows from the outlet air duct [B].

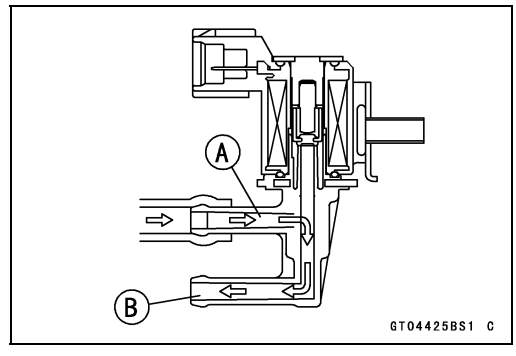

Purge Valve (Service Code 3A, Other than US and CA Models) (DTC P0443)

- Disconnect the 12 V battery.
- Blow the air to the intake air duct [A] again, and make sure that the air does not flow from the outlet air duct [B].

★If the purge valve does not operate as described, replace it with a new one.

★If the purge valve is good, check the wiring for continuity (see Purge Valve Circuit).

★If the wiring is good, check the ECU for its ground and power supply (see ECU Power Supply Inspection in the Fuel System (DFI) chapter).

★If the ground and power supply are good, replace the ECU (see ECU Removal/Installation in the Fuel System (DFI) chapter).

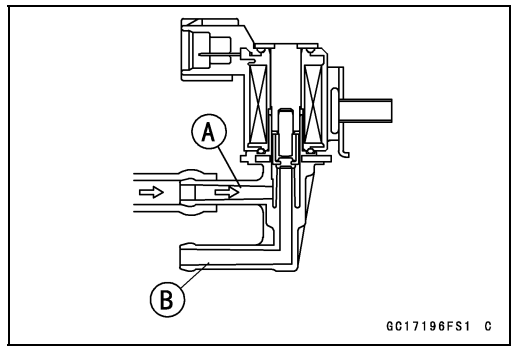

Purge Valve Circuit

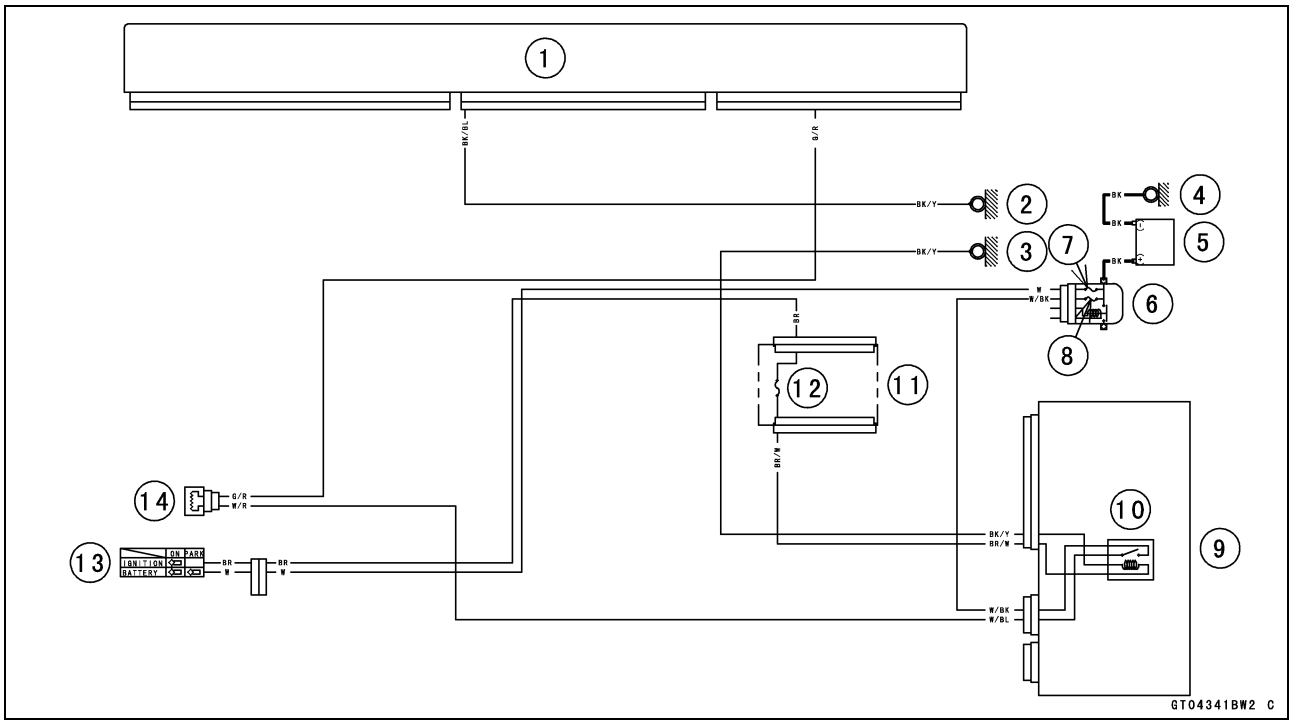

1. ECU
2. Frame Ground (4)
3. Frame Ground (2)
4. Engine Ground
5. Battery 12 V 8.6 Ah
6. Starter Relay
7. Main Fuse 30 A
8. ECU Fuse 15 A
9. Relay Box
10. ECU Main Relay
11. Fuse Box (1)
12. Ignition Fuse 15 A
13. Ignition Switch
14. Purge Valve

ESD ECU Communication Error (Service Code 3C)

ESD ECU Communication Line Inspection

○When the data (for status of ESD system) is not sent from the ESD ECU to the meter unit and ECU, the service code 3C is displayed.
○The data is sent through the CAN communication line.
○The service code 3C is detected with the meter unit.

○When the service code 3C is detected, the white ESD indicator light (LED) [A] blinks, yellow warning indicator light (LED) [B] goes on and code of 3C [C] displayed on the LCD.

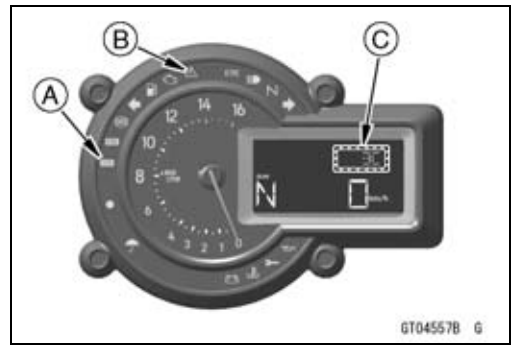

- Check the wiring for continuity between main harness connectors.
- Disconnect:
  ESD ECU Connector (see ESD ECU Removal in the Steering chapter)
  Meter Unit Connector (see Meter Unit Removal in the Electrical System chapter)

Wiring Continuity Inspection

ESD ECU Connector [A] ←→ Meter Unit Connector [B]

ESD ECU Terminal 10 [C] ←→ Meter Unit Terminal [D]

ESD ECU Terminal 1 [E] ←→ Meter Unit Terminal [F]

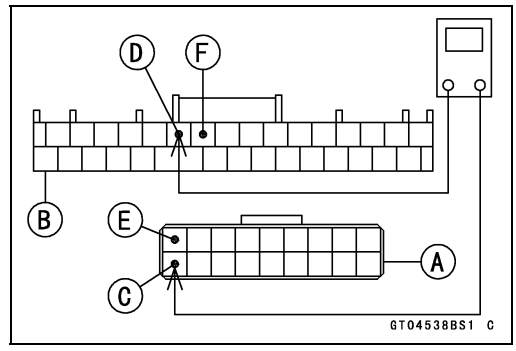

★If the wiring is good, replace the ESD ECU (see ESD ECU Removal/Installation in the Steering chapter).

ESD ECU Communication Error (Service Code 3C)

ESD ECU Communication Line Circuit

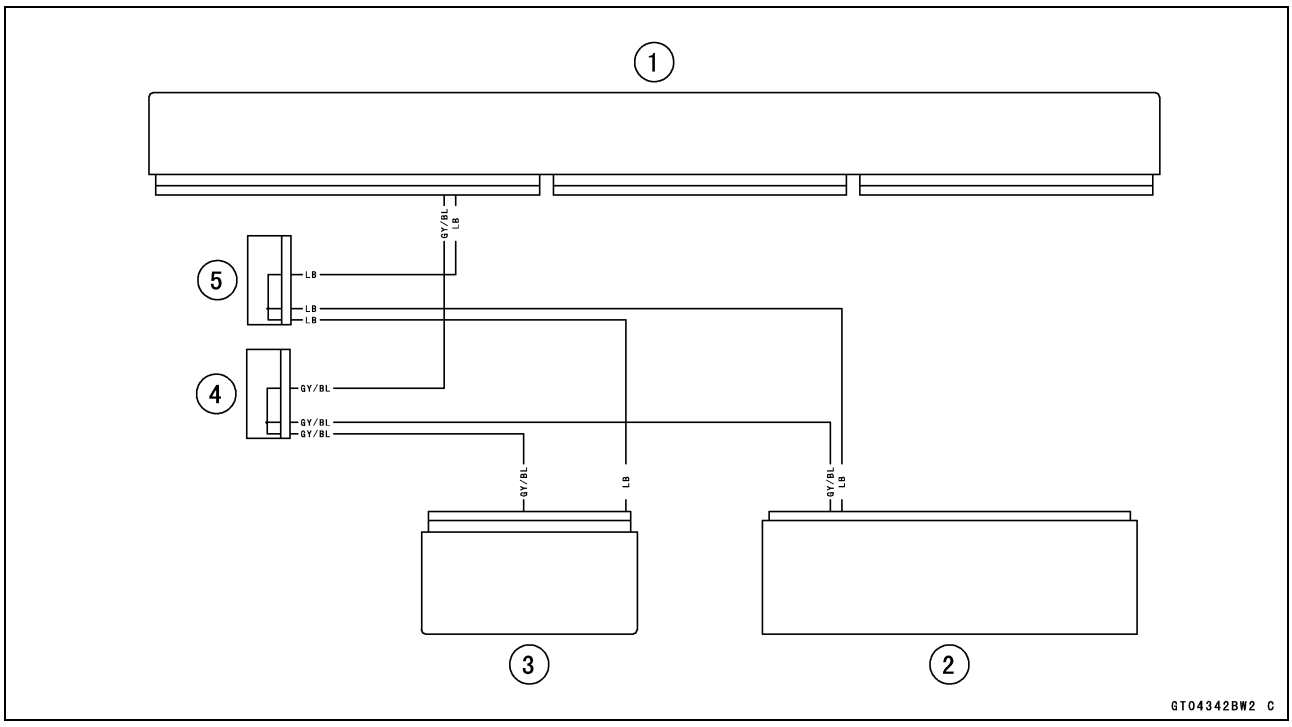

1. ECU
2. Meter Unit
3. ESD ECU
4. Joint Connector I
5. Joint Connector H

Quick Shifter Sensor (Service Code 3E) (DTC P0826)

Quick Shifter Sensor Removal/Installation

● Refer to the Quick Shifter Sensor Removal/Installation in the Crankshaft/Transmission chapter.

Quick Shifter Sensor Input Voltage Inspection

NOTE

○*Be sure the battery is fully charged.*

● Turn the ignition switch off.
● Disconnect:
Quick Shifter Sensor Lead Connector [A]

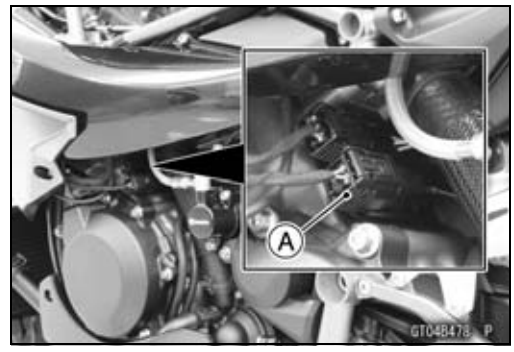

● Connect the measuring adapter [A] between the main harness connector and quick shifter sensor connector.
Main Harness [B]
Quick Shifter Sensor [C]

Special Tool - Measuring Adapter: 57001-1700



● Connect a digital meter [D] to the measuring adapter leads.

Quick Shifter Sensor Input Voltage
Connections to Adapter:
Digital Meter (+) → R (sensor BL/Y) lead
Digital Meter (–) → BK (sensor G) lead

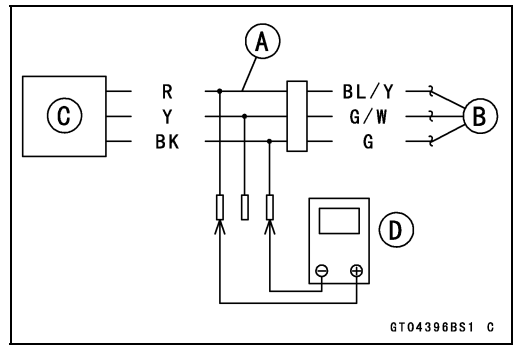

● Measure the input voltage with the engine stopped and with the connector joined.
● Turn the ignition switch on.

Input Voltage
Standard: DC 4.75 ~ 5.25 V

● Turn the ignition switch off.
★If the reading is within standard, check the output voltage (see Quick Shifter Sensor Output Voltage Inspection).

★If the reading is out of the standard, remove the ECU and check the wiring for continuity between main harness connectors.
○Disconnect the ECU and sensor connectors.

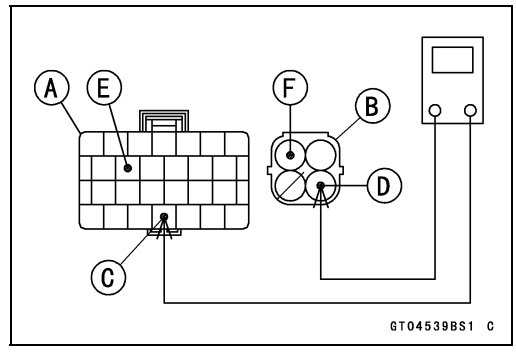

Wiring Continuity Inspection
ECU Connector [A] ←→
Quick Shifter Sensor Connector [B]
ECU Terminal 49 [C] ←→ Sensor Terminal [D]
ECU Terminal 38 [E] ←→ Sensor Terminal [F]

★If the wiring is good, check the ECU for its ground and power supply (see ECU Power Supply Inspection in the Fuel System (DFI) chapter).
★If the ground and power supply are good, replace the ECU (see ECU Removal/Installation in the Fuel System (DFI) chapter).

Quick Shifter Sensor (Service Code 3E) (DTC P0826)

Quick Shifter Sensor Output Voltage Inspection

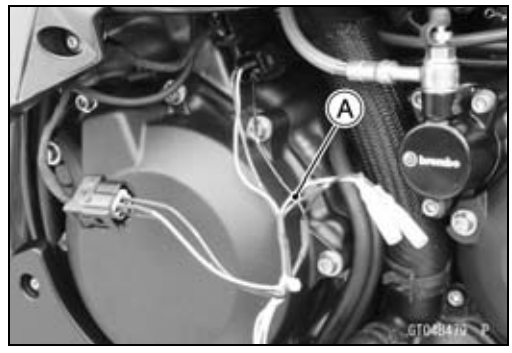

- Measure the output voltage at the quick shifter sensor in the same way as input voltage inspection, note the following.

○Disconnect the quick shifter sensor lead connector and connect the measuring adapter [A] between these connectors.
Main Harness [B]
Quick Shifter Sensor [C]
Digital Meter [D]

Special Tool - Measuring Adapter: 57001-1700

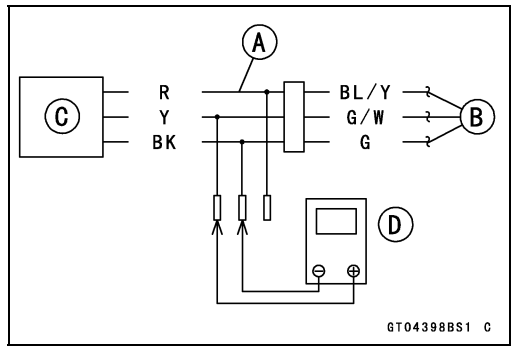

Quick Shifter Sensor Output Voltage
Connections to Adapter:
Digital Meter (+) → Y (sensor G/W) lead
Digital Meter (–) → BK (sensor G) lead

- Measure the output voltage with the engine stopped and with the connector joined.
- Turn the ignition switch on.

Output Voltage
Standard: DC 0.35 ~ 4.65 V

NOTE

○*By shifting up (down) the gear, confirm the output voltage will be raise (drop).*

- Turn the ignition switch off.

★If the reading is out of the standard, check the quick shifter sensor resistance (see Quick Shifter Sensor Resistance Inspection).

★If the reading is within the standard, remove the ECU and check the wiring for continuity between main harness connectors.

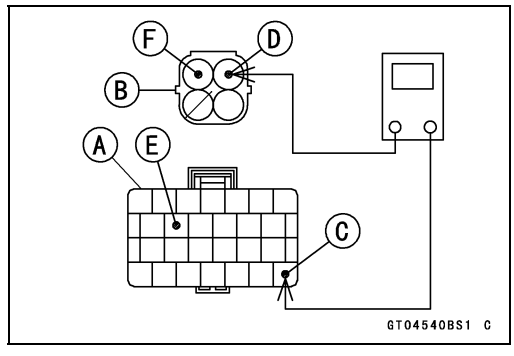

○Disconnect the ECU and sensor connectors.

Wiring Continuity Inspection
ECU Connector [A] ←→
Quick Shifter Sensor Connector [B]
ECU Terminal 46 [C] ←→ Sensor Terminal [D]
ECU Terminal 38 [E] ←→ Sensor Terminal [F]

★If the wiring is good, check the ECU for its ground and power supply (see ECU Power Supply Inspection in the Fuel System (DFI) chapter).

★If the ground and power supply are good, replace the ECU (see ECU Removal/Installation in the Fuel System (DFI) chapter).

Quick Shifter Sensor (Service Code 3E) (DTC P0826)

Quick Shifter Sensor Resistance Inspection

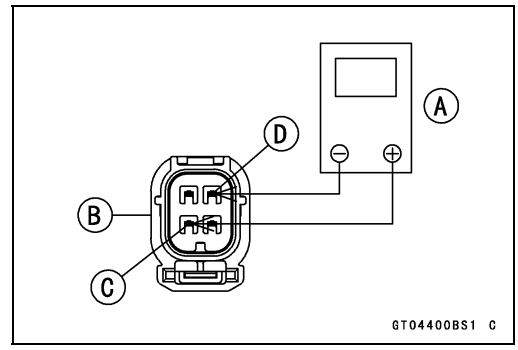

- Disconnect the quick shifter sensor lead connector.
- Connect a digital meter [A] to the quick shifter sensor lead connector [B].
- Measure the quick shifter sensor resistance.

Quick Shifter Sensor Resistance
Connections: BL/Y lead [C] ←→ G lead [D]
Standard: 209 ~ 231 kΩ

★If the reading is out of the standard, replace the sensor.
★If the reading is within the standard, but the problem still exists, replace the ECU (see ECU Removal/Installation in the Fuel System (DFI) chapter).

Quick Shifter Sensor Circuit

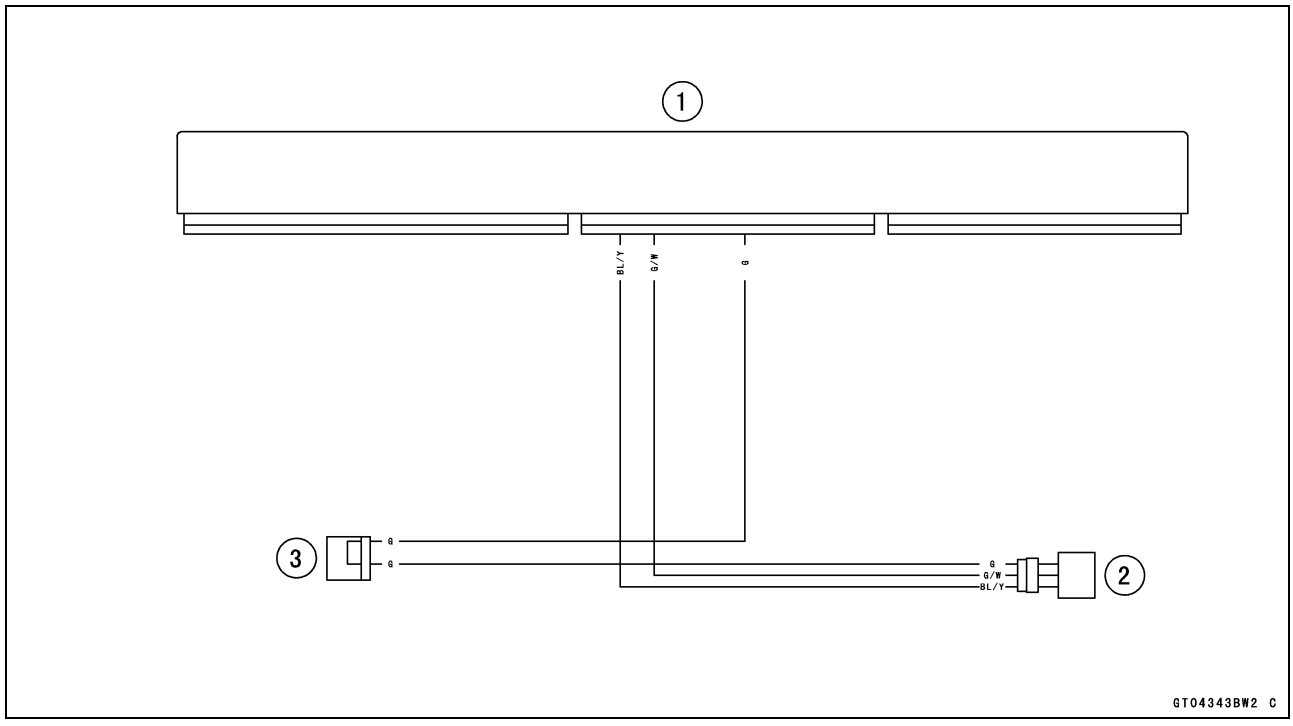

1. ECU
2. Quick Shifter Sensor
3. Joint Connector G

Primary Fuel Injectors #1, #2, #3, #4 (Service Code 41, 42, 43, 44) (DTC P0201, P0202, P0203, P0204)

Primary Fuel Injector #1: Service Code 41 (DTC P0201)
Primary Fuel Injector #2: Service Code 42 (DTC P0202)
Primary Fuel Injector #3: Service Code 43 (DTC P0203)
Primary Fuel Injector #4: Service Code 44 (DTC P0204)

Primary Fuel Injector Removal/Installation

- Refer to the Throttle Body Assy Disassembly/Assembly in the Fuel System (DFI) chapter.

Primary Fuel Injector Audible Inspection

NOTE

○*Be sure the battery is fully charged.*

- Start the engine, and let it idle.
- Apply the flat tip screwdriver [A] to the primary fuel injector [B]. Put the grip end onto your ear, and listen whether the primary fuel injector is clicking or not.

○A sound scope can also be used.

○The click interval becomes shorter as the engine speed rises.

- Do the same for the other primary fuel injectors.

★If all the primary fuel injectors click at a regular intervals, the fuel injectors are normal.

- Turn the ignition switch off.

★If any primary fuel injector does not click, check the primary fuel injector resistance (see Primary Fuel Injector Resistance Inspection).

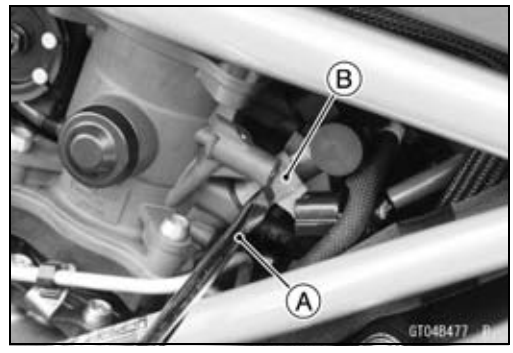

Primary Fuel Injector Resistance Inspection

- Remove:
  Air Intake Chamber (see Air Intake Chamber Removal in the Fuel System (DFI) chapter)
- Disconnect:
  Primary Fuel Injector Connector [A]

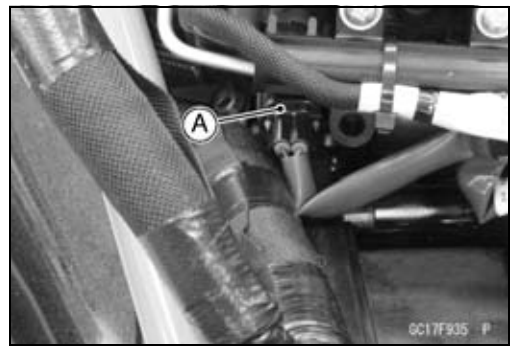

- Connect a digital meter to the terminals in each primary fuel injector [A].

○If necessary, use the measuring adapter.

Special Tool - Measuring Adapter: 57001-1700

- Measure the primary fuel injector resistance.

Primary Fuel Injector Resistance
Standard: About 11.7 ~ 12.3 Ω @20°C (68°F)

★If the reading is out of the standard, replace the primary fuel injector.

★If the reading is within the standard, check the power source voltage (see Primary Fuel Injector Power Source Voltage Inspection).

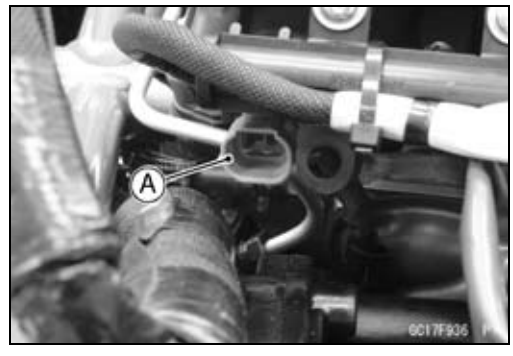

Primary Fuel Injectors #1, #2, #3, #4 (Service Code 41, 42, 43, 44) (DTC P0201, P0202, P0203, P0204)

Primary Fuel Injector Power Source Voltage Inspection



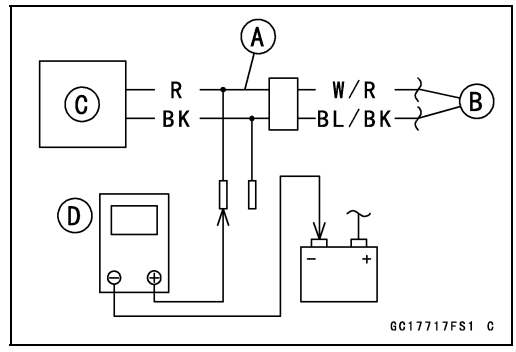

NOTE

○*Be sure the battery is fully charged.*

- Turn the ignition switch off.
- Remove:
  Air Intake Chamber (see Air Intake Chamber Removal in the Fuel System (DFI) chapter)
- Disconnect the primary fuel injector connector and connect the measuring adapter [A] between these connectors as shown.
  Subharness [B]
  Primary Fuel Injector #1 [C]

Special Tool - Measuring Adapter: 57001-1700

- Connect a digital meter [D] to the measuring adapter leads.

Primary Fuel Injector Power Source Voltage
Connections to Adapter:
For Primary Fuel Injector #1, #2, #3, #4
Digital Meter (+) → R (injector W/R) lead
Digital Meter (–) → Battery (–) Terminal

- Measure the power source voltage with the engine stopped.
- Slide the engine start/stop switch to run position.
- Turn the ignition switch on.

Power Source Voltage
Standard: Battery Voltage for 3 seconds, and then 0 V

- Turn the ignition switch off.

★If the reading stays on battery voltage and never shows 0 V, check the fuel pump relay (see Relay Circuit Inspection in the Electrical System chapter).

★If the fuel pump relay is normal, check the ECU for its ground and power supply (see ECU Power Supply Inspection in the Fuel System (DFI) chapter).

★If the ground and power supply are good, replace the ECU (see ECU Removal/Installation in the Fuel System (DFI) chapter).

★If there is still no battery voltage, check the fuel pump relay (see Relay Circuit Inspection in the Electrical System chapter).

★If the fuel pump relay is normal, check the power source wiring (see Fuel Injector Circuit).

★If the wiring is good, check the ECU for its ground and power supply (see ECU Power Supply Inspection in the Fuel System (DFI) chapter).

★If the ground and power supply are good, replace the ECU (see ECU Removal/Installation in the Fuel System (DFI) chapter).

★If the reading is in specification, check the output voltage (see Primary Fuel Injector Output Voltage Inspection).

Primary Fuel Injectors #1, #2, #3, #4 (Service Code 41, 42, 43, 44) (DTC P0201, P0202, P0203, P0204)

Primary Fuel Injector Output Voltage Inspection

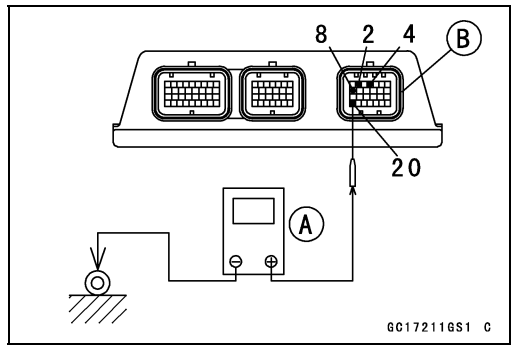

NOTE

○*Be sure the battery is fully charged.*

- Turn the ignition switch off.
- Remove:
  ECU (see ECU Removal in the Fuel System (DFI) chapter)

○Do not disconnect the ECU connectors.

- Connect a digital meter [A] to the connector [B] with the needle adapter set.

Special Tool - Needle Adapter Set: 57001-1457

Primary Fuel Injector Output Voltage
Connections to ECU Connector:
For Primary Fuel Injector #1
Digital Meter (+) → BL/BK lead (ECU terminal 20)
Digital Meter (–) → Frame Ground Terminal
For Primary Fuel Injector #2
Digital Meter (+) → BL/R lead (ECU terminal 8)
Digital Meter (–) → Frame Ground Terminal
For Primary Fuel Injector #3
Digital Meter (+) → BL/O lead (ECU terminal 2)
Digital Meter (–) → Frame Ground Terminal
For Primary Fuel Injector #4
Digital Meter (+) → BL/G lead (ECU terminal 4)
Digital Meter (–) → Frame Ground Terminal

- Measure the output voltage with the engine stopped and with the connector joined.
- Slide the engine start/stop switch to run position.
- Turn the ignition switch on.

Output Voltage
Standard: Battery Voltage for 3 seconds, and then 0 V

- Turn the ignition switch off.

★If the reading is in specification, check the ECU for its ground and power supply (see ECU Power Supply Inspection in the Fuel System (DFI) chapter).

★If the ground and power supply are good, replace the ECU (see ECU Removal/Installation in the Fuel System (DFI) chapter).

Primary Fuel Injectors #1, #2, #3, #4 (Service Code 41, 42, 43, 44) (DTC P0201, P0202, P0203, P0204)

★If the reading is out of the specification, remove the ECU and check the wiring for continuity between main and sub-harness connectors.

○Disconnect the ECU and sensor connectors.

Wiring Continuity Inspection

ECU Connector [A] ←→ Primary Fuel Injector Connector [B]

For Primary Fuel Injector #1

ECU Terminal 20 [C] ←→ Fuel Injector #1 Terminal [D]

For Primary Fuel Injector #2

ECU Terminal 8 [E] ←→ Fuel Injector #2 Terminal [D]

For Primary Fuel Injector #3

ECU Terminal 2 [F] ←→ Fuel Injector #3 Terminal [D]

For Primary Fuel Injector #4

ECU Terminal 4 [G] ←→ Fuel Injector #4 Terminal [D]

★If the wiring is good, check the ECU for its ground and power supply (see ECU Power Supply Inspection in the Fuel System (DFI) chapter).

★If the ground and power supply are good, replace the ECU (see ECU Removal/Installation in the Fuel System (DFI) chapter).

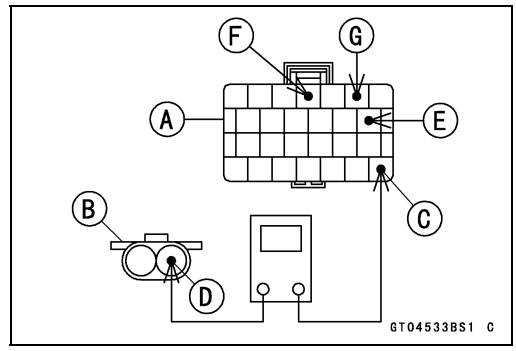

Primary Fuel Injectors #1, #2, #3, #4 (Service Code 41, 42, 43, 44) (DTC P0201, P0202, P0203, P0204)

Primary Fuel Injector Fuel Line Inspection

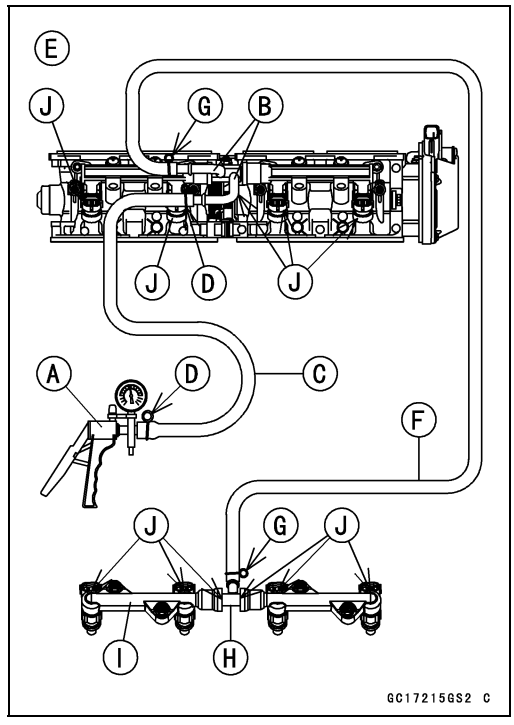

- Remove:
  Fuel Tank (see Fuel Tank Removal in the Fuel System (DFI) chapter)
  Air Intake Chamber (see Air Intake Chamber Removal in the Fuel System (DFI) chapter)
- Disconnect:
  Primary and Secondary Fuel Hoses (see Fuel Hose Replacement in the Periodic Maintenance chapter)

○Be sure to place a piece of cloth around the fuel outlet pipe of the fuel pump and the delivery pipe of the throttle body assy.

⚠ WARNING

Fuel is flammable and explosive under certain conditions and can cause severe burns. Be prepared for fuel spillage; any spilled fuel must be completely wiped up immediately. When the fuel hose is disconnected, fuel spills out from the hose and the pipe because of residual pressure. Cover the hose connection with a piece of clean cloth to prevent fuel spillage.

- Check the fuel injector fuel line for leakage as follows.

○Connect a commercially available vacuum/pressure pump [A] to the nipple of the delivery pipe [B] with the fuel hose [C] (both ends with the clamps [D]) as shown.
Rear View [E]

- Connect the fuel hose [F] (both ends with the clamps [G]) between the delivery pipes [H] of the throttle body assy and nozzle assy [I] as shown.

○Apply soap and water solution to the areas [J] as shown.

○Watching the pressure gauge, squeeze the pump lever, and build up the pressure until the pressure reaches the maximum pressure.

Fuel Injector Fuel Line Maximum Pressure
Standard: 380 kPa (3.9 kgf/cm², 55 psi)

NOTICE

During pressure testing, do not exceed the maximum pressure for which the system is designed.

○Watch the gauge for at least 6 seconds.

★If the pressure holds steady, the fuel line is good.

★If the pressure drops at once or if bubbles are found in the area, the fuel line is leaking. Replace the delivery pipe assy, injectors and related parts.

○Repeat the leak test, and check the fuel line for no leakage.

- Install the removed parts (see appropriate chapters).
- Start the engine and check for fuel leakage.

Primary Fuel Injectors #1, #2, #3, #4 (Service Code 41, 42, 43, 44) (DTC P0201, P0202, P0203, P0204)

Fuel Injector Circuit

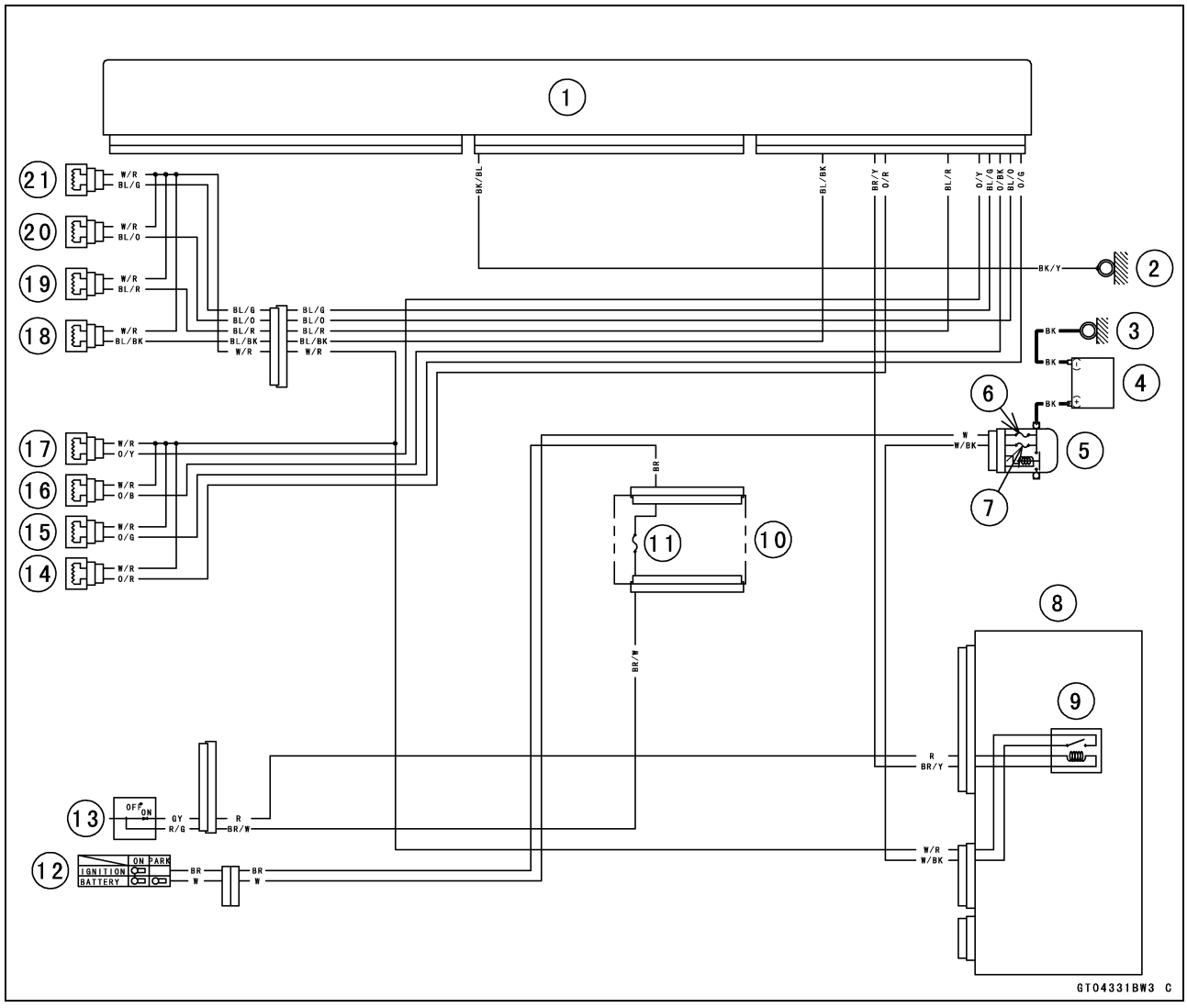

1. ECU
2. Frame Ground (4)
3. Engine Ground
4. Battery 12 V 8.6 Ah
5. Starter Relay
6. Main Fuse 30 A
7. ECU Fuse 15 A
8. Relay Box
9. Fuel Pump Relay
10. Fuse Box (1)
11. Ignition Fuse 15 A
12. Ignition Switch
13. Engine Start/Stop Switch (Engine Stop)
14. Secondary Fuel Injector #1
15. Secondary Fuel Injector #2
16. Secondary Fuel Injector #3
17. Secondary Fuel Injector #4
18. Primary Fuel Injector #1
19. Primary Fuel Injector #2
20. Primary Fuel Injector #3
21. Primary Fuel Injector #4

Fuel Pump Relay (Service Code 46) (DTC P0627)

Fuel Pump Relay Removal/Installation

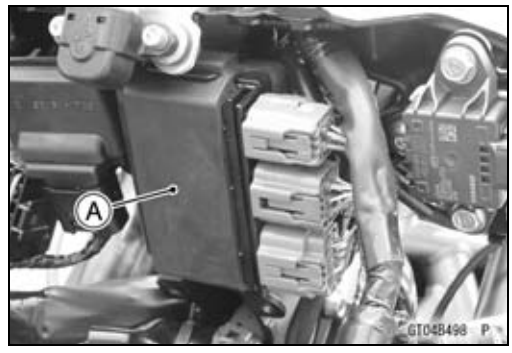

○The fuel pump relay is built in the relay box [A].

● Refer to the Relay Box Removal in the Electrical System chapter.

Fuel Pump Relay Inspection

● Refer to the Relay Circuit Inspection in the Electrical System chapter.

★If the fuel pump relay is normal, check the wiring to the fuel pump relay (see Fuel Pump Relay Circuit).

★If the wiring is good, check the ECU for its ground and power supply (see ECU Power Supply Inspection in the Fuel System (DFI) chapter).

★If the ground and power supply are good, replace the ECU (see ECU Removal/Installation in the Fuel System (DFI) chapter).

Fuel Pump Relay Circuit

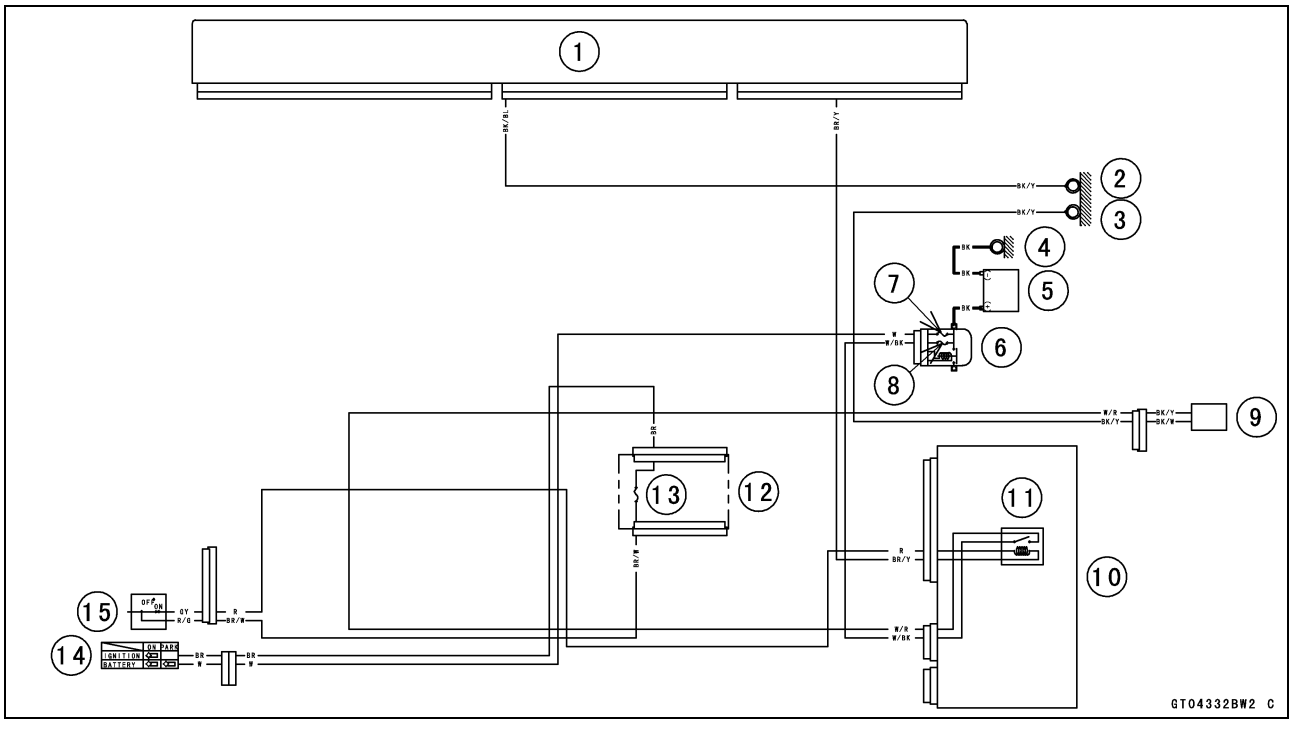

1. ECU
2. Frame Ground (4)
3. Frame Ground (3)
4. Engine Ground
5. Battery 12 V 8.6 Ah
6. Starter Relay
7. Main Fuse 30 A
8. ECU Fuse 15 A
9. Fuel Pump
10. Relay Box
11. Fuel Pump Relay
12. Fuse Box (1)
13. Ignition Fuse 15 A
14. Ignition Switch
15. Engine Start/Stop Switch (Engine Stop)

Return Spring (Service Code 49) (DTC P2119)

Return Spring Removal

NOTICE
Do not remove return spring in the gear case [A] since it has been set with precision at the factory.



Return Spring Inspection

- Turn the ignition switch off.
- Remove

  Air Intake Chamber (see Air Intake Chamber Removal in the Fuel System (DFI) chapter)
- Check that the throttle valves [A] move lightly by pushing finger without the spring force.

★If the throttle valves move lightly, the return spring is broken, replace the throttle body assy.

★If the throttle valves move hardly and return them by the return spring, check the output voltage of the throttle position sensor (see Throttle Position Sensor Output Voltage Inspection).

★If the output voltage is good, replace the ECU (see ECU Removal/Installation in the Fuel System (DFI) chapter).

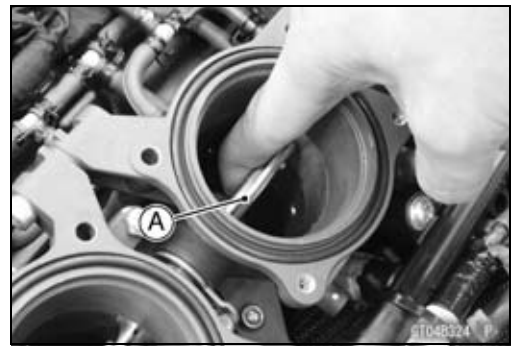

Secondary Fuel Injectors #1, #2, #3, #4 (Service Code 4A, 4B, 4C, 4D) (DTC P0205, P0206, P0207, P0208)

Secondary Fuel Injector #1: Service Code 4A (DTC P0205)
Secondary Fuel Injector #2: Service Code 4B (DTC P0206)
Secondary Fuel Injector #3: Service Code 4C (DTC P0207)
Secondary Fuel Injector #4: Service Code 4D (DTC P0208)

Secondary Fuel Injector Removal/Installation

- Refer to the Nozzle Assy Disassembly/Assembly in the Fuel System (DFI) chapter.

Secondary Fuel Injector Resistance Inspection

- Remove:
  Fuel Tank (see Fuel Tank Removal in the Fuel System (DFI) chapter)
- Disconnect:
  Secondary Fuel Injector Connector [A]

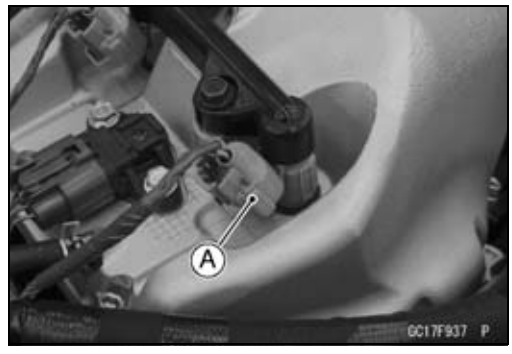

- Connect a digital meter to the terminals in each secondary fuel injector [A].
- Measure the secondary fuel injector resistance.

Secondary Fuel Injector Resistance
Standard: About 11.7 ~ 12.3 Ω @20°C (68°F)

★If the reading is out of the standard, replace the secondary fuel injector.
★If the reading is within the standard, check the power source voltage (see Secondary Fuel Injector Power Source Voltage Inspection).

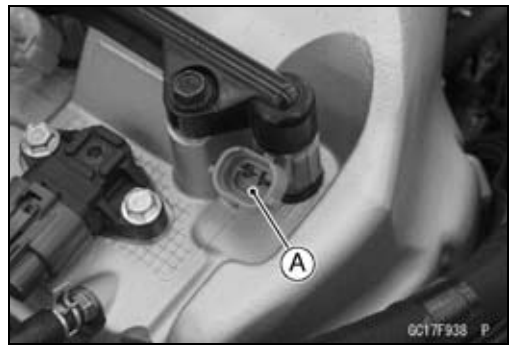

Secondary Fuel Injectors #1, #2, #3, #4 (Service Code 4A, 4B, 4C, 4D) (DTC P0205, P0206, P0207, P0208)

Secondary Fuel Injector Power Source Voltage Inspection

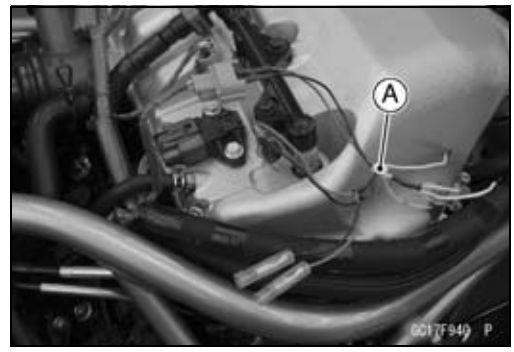

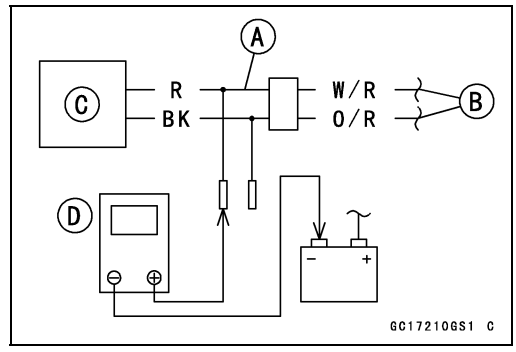

NOTE

○*Be sure the battery is fully charged.*

- Turn the ignition switch off.
- Remove:
  Fuel Tank (see Fuel Tank Removal in the Fuel System (DFI) chapter)
- Disconnect the secondary fuel injector connector and connect the measuring adapter [A] between these connectors as shown.
  Main Harness [B]
  Secondary Fuel Injector #1 [C]

Special Tool - Measuring Adapter: 57001-1700

- Connect a digital meter [D] to the measuring adapter leads.

Secondary Fuel Injector Power Source Voltage
Connections to Adapter:
For Secondary Fuel Injector #1, #2, #3, #4
Digital Meter (+) → R (injector W/R) lead
Digital Meter (–) → Battery (–) Terminal

- Measure the power source voltage with the engine stopped.
- Slide the engine start/stop switch to run position.
- Turn the ignition switch on.

Power Source Voltage
Standard: Battery Voltage for 3 seconds, and then 0 V

- Turn the ignition switch off.

★If the reading stays on battery voltage and never shows 0 V, check the fuel pump relay (see Relay Circuit Inspection in the Electrical System chapter).

★If the fuel pump relay is normal, check the ECU for its ground and power supply (see ECU Power Supply Inspection in the Fuel System (DFI) chapter).

★If the ground and power supply are good, replace the ECU (see ECU Removal/Installation in the Fuel System (DFI) chapter).

★If there is still no battery voltage, check the fuel pump relay (see Relay Circuit Inspection in the Electrical System chapter).

★If the fuel pump relay is normal, check the power source wiring (see Fuel Injector Circuit).

★If the wiring is good, check the ECU for its ground and power supply (see ECU Power Supply Inspection in the Fuel System (DFI) chapter).

★If the ground and power supply are good, replace the ECU (see ECU Removal/Installation in the Fuel System (DFI) chapter).

★If the reading is in specification, check the output voltage (see Secondary Fuel Injector Output Voltage Inspection).

Secondary Fuel Injectors #1, #2, #3, #4 (Service Code 4A, 4B, 4C, 4D) (DTC P0205, P0206, P0207, P0208)

Secondary Fuel Injector Output Voltage Inspection

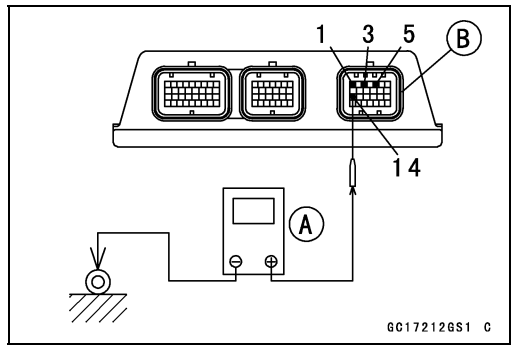

NOTE

○*Be sure the battery is fully charged.*

- Turn the ignition switch off.
- Remove:
  ECU (see ECU Removal in the Fuel System (DFI) chapter)

○Do not disconnect the ECU connectors.

- Connect a digital meter [A] to the connector [B] with the needle adapter set.

Special Tool - Needle Adapter Set: 57001-1457

Secondary Fuel Injector Output Voltage
Connections to ECU Connector:
For Secondary Fuel Injector #1
Digital Meter (+) → O/R lead (ECU terminal 14)
Digital Meter (–) → Frame Ground Terminal
For Secondary Fuel Injector #2
Digital Meter (+) → O/G lead (ECU terminal 1)
Digital Meter (–) → Frame Ground Terminal
For Secondary Fuel Injector #3
Digital Meter (+) → O/BK lead (ECU terminal 3)
Digital Meter (–) → Frame Ground Terminal
For Secondary Fuel Injector #4
Digital Meter (+) → O/Y lead (ECU terminal 5)
Digital Meter (–) → Frame Ground Terminal

- Measure the output voltage with the engine stopped and with the connector joined.
- Slide the engine start/stop switch to run position.
- Turn the ignition switch on.

Output Voltage
Standard: Battery Voltage for 3 seconds, and then 0 V

- Turn the ignition switch off.

★If the reading is in specification, check the ECU for its ground and power supply (see ECU Power Supply Inspection in the Fuel System (DFI) chapter).

★If the ground and power supply are good, replace the ECU (see ECU Removal/Installation in the Fuel System (DFI) chapter).

Secondary Fuel Injectors #1, #2, #3, #4 (Service Code 4A, 4B, 4C, 4D) (DTC P0205, P0206, P0207, P0208)

★If the reading is out of the specification, remove the ECU and check the wiring for continuity between main harness connectors.

○Disconnect the ECU and sensor connectors.

Wiring Continuity Inspection

ECU Connector [A] ←→ Secondary Fuel Injector Connector [B]

For Secondary Fuel Injector #1

ECU Terminal 14 [C] ←→ Fuel Injector #1 Terminal [D]

For Secondary Fuel Injector #2

ECU Terminal 1 [E] ←→ Fuel Injector #2 Terminal [D]

For Secondary Fuel Injector #3

ECU Terminal 3 [F] ←→ Fuel Injector #3 Terminal [D]

For Secondary Fuel Injector #4

ECU Terminal 5 [G] ←→ Fuel Injector #4 Terminal [D]

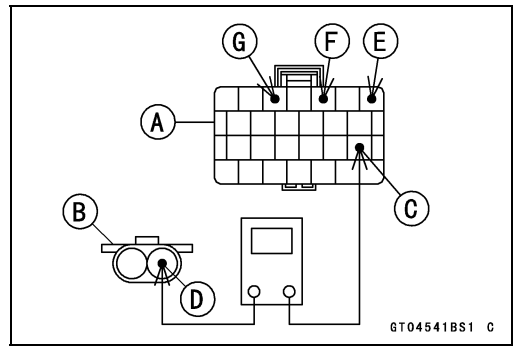

★If the wiring is good, check the ECU for its ground and power supply (see ECU Power Supply Inspection in the Fuel System (DFI) chapter).

★If the ground and power supply are good, replace the ECU (see ECU Removal/Installation in the Fuel System (DFI) chapter).

Secondary Fuel Injector Fuel Line Inspection

● Refer to the Primary Fuel Injector Fuel Line Inspection.

Secondary Fuel Injectors #1, #2, #3, #4 (Service Code 4A, 4B, 4C, 4D) (DTC P0205, P0206, P0207, P0208)

Fuel Injector Circuit

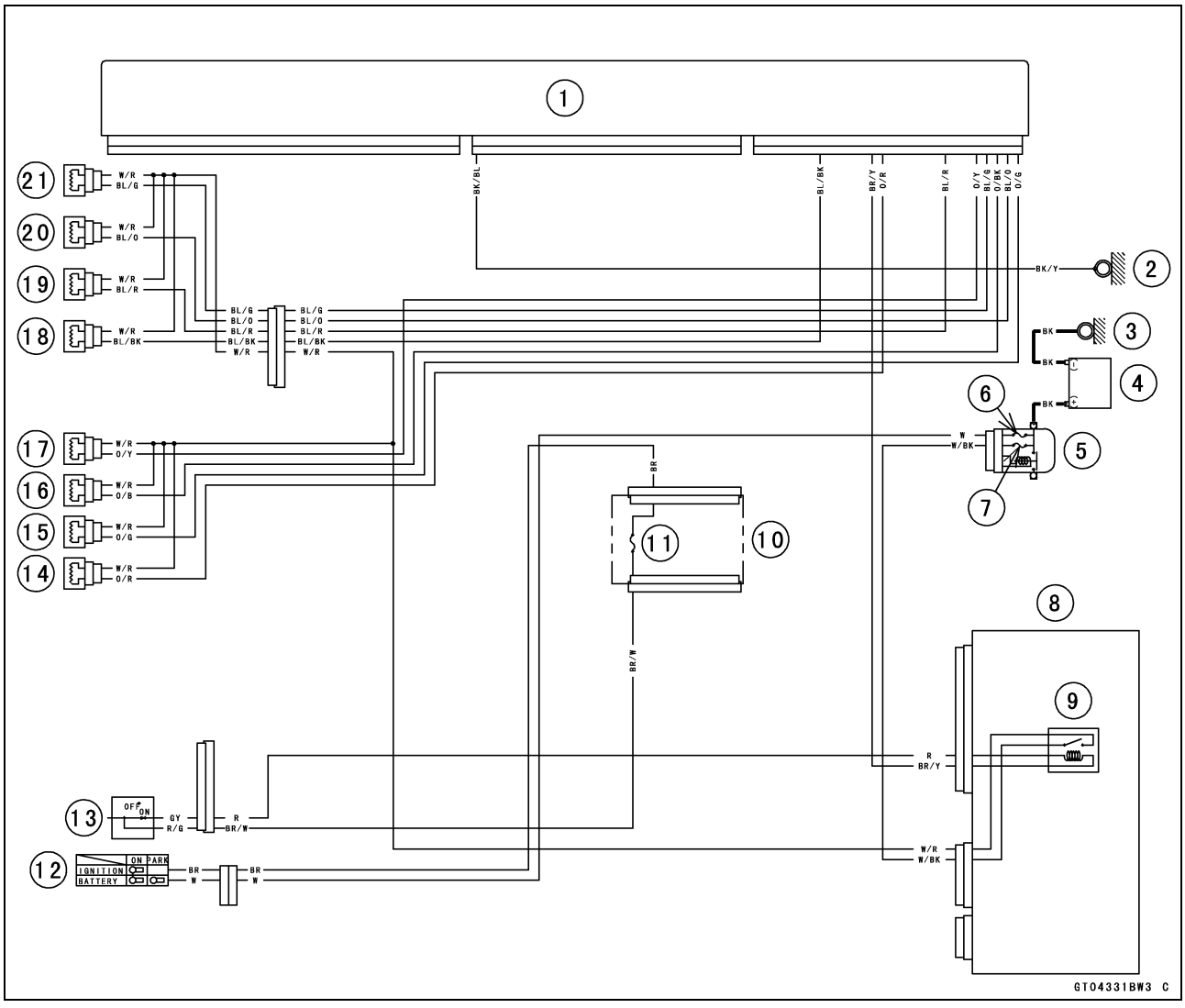

1. ECU
2. Frame Ground (4)
3. Engine Ground
4. Battery 12 V 8.6 Ah
5. Starter Relay
6. Main Fuse 30 A
7. ECU Fuse 15 A
8. Relay Box
9. Fuel Pump Relay
10. Fuse Box (1)
11. Ignition Fuse 15 A
12. Ignition Switch
13. Engine Start/Stop Switch (Engine Stop)
14. Secondary Fuel Injector #1
15. Secondary Fuel Injector #2
16. Secondary Fuel Injector #3
17. Secondary Fuel Injector #4
18. Primary Fuel Injector #1
19. Primary Fuel Injector #2
20. Primary Fuel Injector #3
21. Primary Fuel Injector #4

Stick Coils #1, #2, #3, #4 (Service Code 51, 52, 53, 54) (DTC P0351, P0352, P0353, P0354)

Stick Coil #1: Service Code 51 (DTC P0351)
Stick Coil #2: Service Code 52 (DTC P0352)
Stick Coil #3: Service Code 53 (DTC P0353)
Stick Coil #4: Service Code 54 (DTC P0354)

Stick Coil Removal/Installation

- Refer to the Stick Coil Removal/Installation in the Electrical System chapter.

Stick Coil Primary Winding Resistance Inspection

- Refer to the Stick Coil Inspection in the Electrical System chapter.

★If the reading is within the standard, check the input voltage (see Stick Coil Input Voltage Inspection).

Stick Coil Input Voltage Inspection

NOTE

○*Be sure the battery is fully charged.*

- Turn the ignition switch off.
- Remove the ECU (see ECU Removal in the Fuel System (DFI) chapter).

○Do not disconnect the ECU connectors.

- Connect a digital meter [A] to the connector [B] with the needle adapter set.

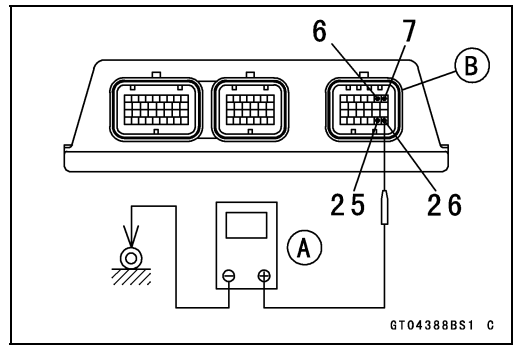

Special Tool - Needle Adapter Set: 57001-1457

Stick Coil Input Voltage
Connections to ECU Connector:
For Stick Coil #1
Digital Meter (+) → BK lead (terminal 7)
Digital Meter (–) → Frame Ground Terminal
For Stick Coil #2
Digital Meter (+) → BK/R lead (terminal 6)
Digital Meter (–) → Frame Ground Terminal
For Stick Coil #3
Digital Meter (+) → BK/O lead (terminal 25)
Digital Meter (–) → Frame Ground Terminal
For Stick Coil #4
Digital Meter (+) → BK/G lead (terminal 26)
Digital Meter (–) → Frame Ground Terminal

- Measure the input voltage to each primary winding of the stick coils with the engine stopped and with the connectors joined.
- Slide the engine start/stop switch to run position.
- Turn the ignition switch on.

Input Voltage
Standard: Battery Voltage

Stick Coils #1, #2, #3, #4 (Service Code 51, 52, 53, 54) (DTC P0351, P0352, P0353, P0354)

● Turn the ignition switch off.
★If the input voltage is out of the standard, check the wiring for continuity (see Stick Coil Circuit).
★If the wiring is good, check the ECU for its ground and power supply (see ECU Power Supply Inspection in the Fuel System (DFI) chapter).
★If the ground and power supply are good, replace the ECU (see ECU Removal/Installation in the Fuel System (DFI) chapter).
★If the input voltage is within the standard, check the ECU for its ground and power supply (see ECU Power Supply Inspection in the Fuel System (DFI) chapter).
★If the ground and power supply are good, replace the ECU (see ECU Removal/Installation in the Fuel System (DFI) chapter).

Stick Coil Circuit

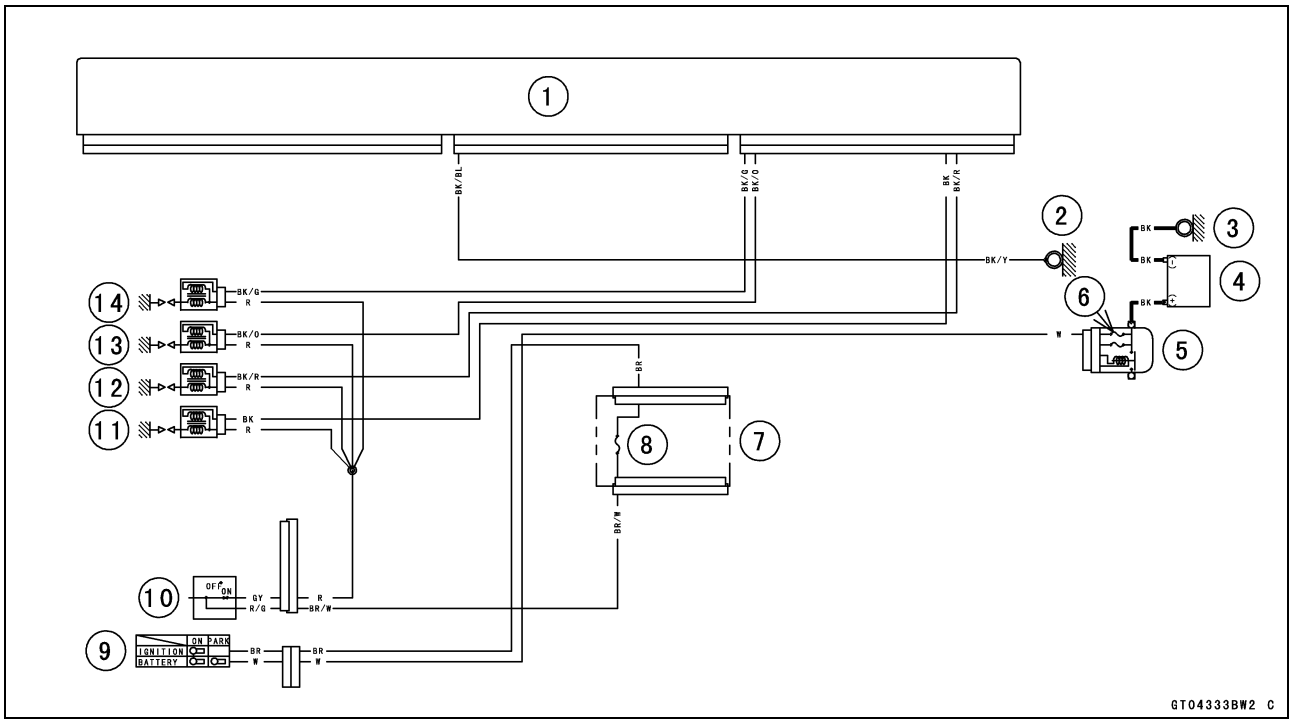

1. ECU
2. Frame Ground (4)
3. Engine Ground
4. Battery 12 V 8.6 Ah
5. Starter Relay
6. Main Fuse 30 A
7. Fuse Box (1)
8. Ignition Fuse 15 A
9. Ignition Switch
10. Engine Start/Stop Switch (Engine Stop)
11. Stick Coil #1
12. Stick Coil #2
13. Stick Coil #3
14. Stick Coil #4

Radiator Fan Relay (Service Code 56) (DTC P0480)

Radiator Fan Relay Removal/Installation

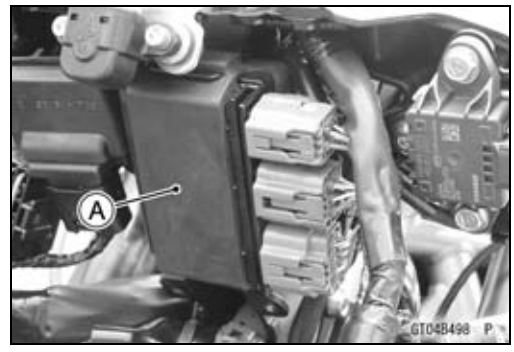

○The radiator fan relay is built in the relay box [A].

● Refer to the Relay Box Removal in the Electrical System chapter.

Radiator Fan Relay Inspection

● Refer to the Relay Circuit Inspection in the Electrical System chapter.

★If the radiator fan relay is normal, check the wiring for continuity (see Radiator Fan Relay Circuit).

★If the wiring is good, check the ECU for its ground and power supply (see ECU Power Supply Inspection in the Fuel System (DFI) chapter).

★If the ground and power supply are good, replace the ECU (see ECU Removal/Installation in the Fuel System (DFI) chapter).

Radiator Fan Relay (Service Code 56) (DTC P0480)

Radiator Fan Relay Circuit

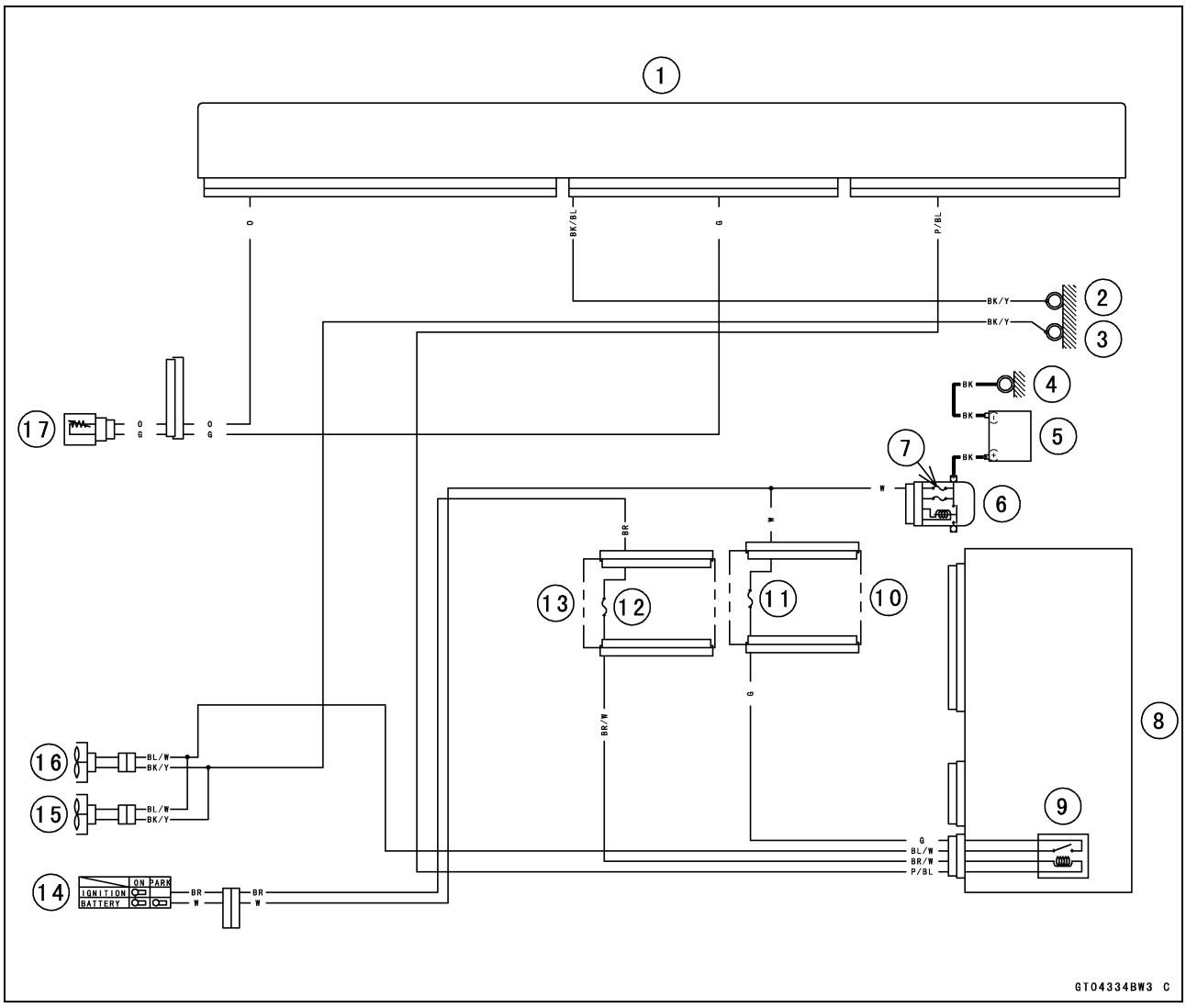

1. ECU
2. Frame Ground (4)
3. Frame Ground (3)
4. Engine Ground
5. Battery 12 V 8.6 Ah
6. Starter Relay
7. Main Fuse 30 A
8. Relay Box
9. Radiator Fan Relay
10. Fuse Box (2)
11. Fan Fuse 15 A
12. Ignition Fuse 15 A
13. Fuse Box (1)
14. Ignition Switch
15. Fan Motor (2)
16. Fan Motor (1)
17. Water Temperature Sensor

ETV Actuator (Service Code 58) (DTC P2100)

ETV Actuator Removal

NOTICE
Do not remove ETV actuator in the gear case [A] since it has been set with precision at the factory.



ETV Actuator Input Voltage Inspection

NOTE

○*Be sure the battery is fully charged.*

- Turn the ignition switch off.
- Remove the ECU (see ECU Removal in the Fuel System (DFI) chapter)

○Do not disconnect the ECU connectors.

- Connect the digital meter [A] to the connector [B] with the needle adapter set.

Special Tool - Needle Adapter Set: 57001-1457

ETV Actuator Input Voltage
Connection:

Digital Meter (+) → W/G lead (ECU terminal 78)

Digital Meter (−) → BK/O lead (ECU terminal 70)

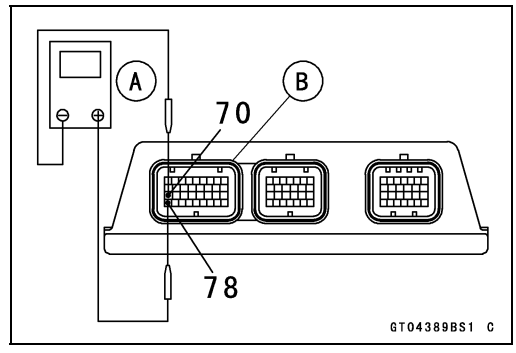

- Turn the ignition switch on.
- Measure the input voltage.

Input Voltage
Standard: About DC 1 ~ 2 V or –1 ~ –2 V

- Turn the ignition switch off.

★If the reading is out of the standard, check the following items.
ETV Actuator Relay (see ETV Actuator Relay Inspection)
Wiring (see ETV Actuator Circuit)

★If the above items are good, replace the throttle body assy (see Throttle Body Assy Removal/Installation in the Fuel System (DFI) chapter) and/or the ECU (see ECU Removal/Installation in the Fuel System (DFI) chapter).

ETV Actuator Relay Inspection

- Remove:
Upper Fairing (see Upper Fairing Removal in the Frame chapter)
ETV Actuator Relay [A]



ETV Actuator (Service Code 58) (DTC P2100)

- Connect a tester [A] and a 12 V battery [B] to the relay [C] as shown.

★If the relay does not work as specified, the relay is defective. Replace the relay.

Testing Relay

Criteria: When battery is connected ⇒ 0 Ω

When battery is disconnected ⇒ ∞Ω

Relay Coil Terminals: [1] and [2]

Relay Switch Terminals: [3] and [4]

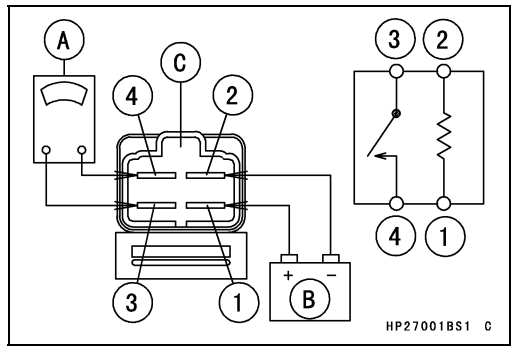

ETV Actuator Circuit

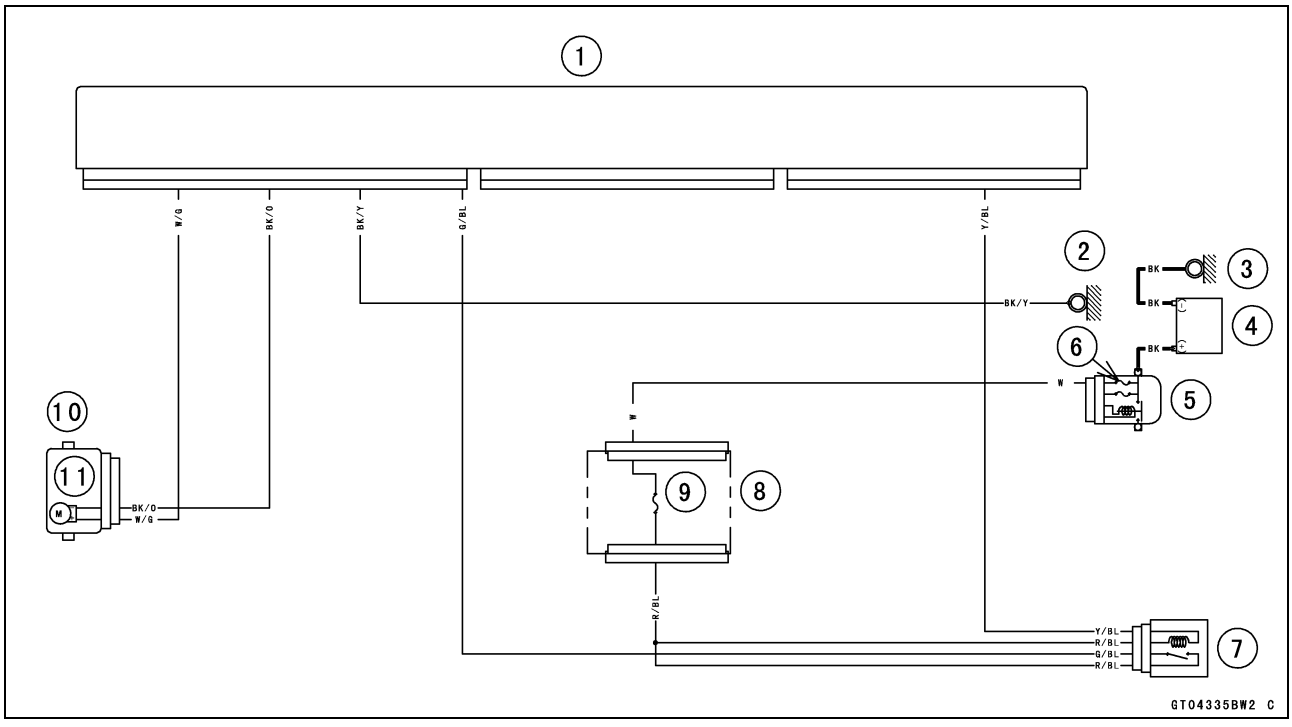

1. ECU
2. Frame Ground (4)
3. Engine Ground
4. Battery 12 V 8.6 Ah
5. Starter Relay
6. Main Fuse 30 A
7. ETV Actuator Relay
8. Fuse Box (2)
9. ETV Actuator Relay Fuse 10 A
10. Throttle Position Sensor/ETV Actuator
11. ETV Actuator

Exhaust Butterfly Valve Actuator (Service Code 63) (DTC P0475)

Exhaust Butterfly Valve Actuator Removal

● Refer to the Exhaust Butterfly Valve Actuator Removal in the Engine Top End chapter.

Exhaust Butterfly Valve Actuator Installation

● Refer to the Exhaust Butterfly Valve Actuator Installation in the Engine Top End chapter.

Exhaust Butterfly Valve Actuator Inspection

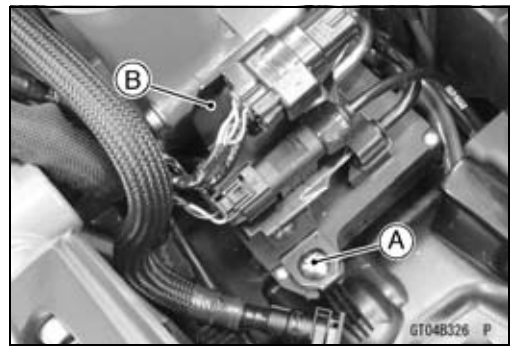

NOTE

○*Be sure the battery is fully charged*

● Remove:
Fuel Tank (see Fuel Tank Removal in the Fuel System (DFI) chapter)
Exhaust Butterfly Valve Actuator Mounting Screw [A]
● Remove the bracket [B] from the exhaust butterfly valve actuator.

● Turn the ignition switch on.
● Make sure that the pulley turns clockwise, then counterclockwise and then returns slightly clockwise [A] as shown.

NOTE

○*The stop position [B] of the pulley is changed by the cables tension and the closed position of the exhaust butterfly valve.*

● Turn the ignition switch off.
★If the pulley does not operate, check the exhaust butterfly valve actuator resistance (see Exhaust Butterfly Valve Actuator Resistance Inspection).

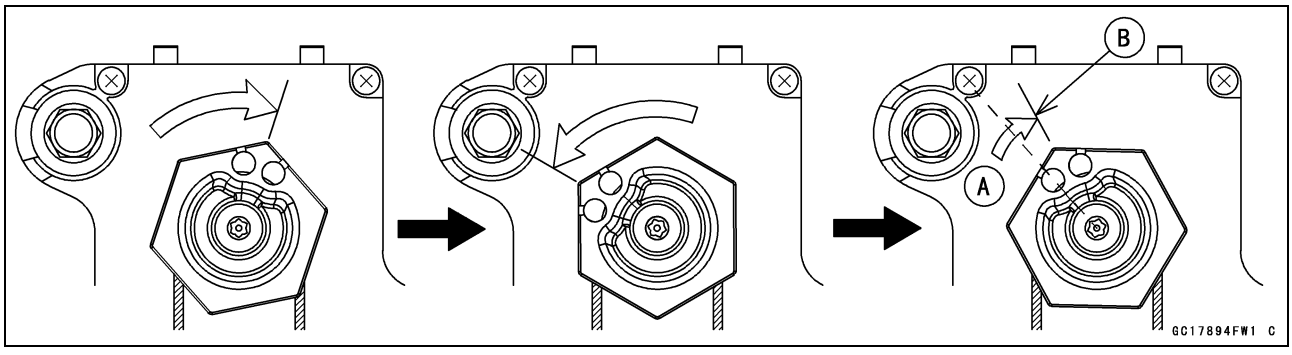

Exhaust Butterfly Valve Actuator Resistance Inspection

● Remove the fuel tank (see Fuel Tank Removal in the Fuel System (DFI) chapter).
● Turn the ignition switch off.
● Open the clamp [A].
● Slide the dust cover [B].

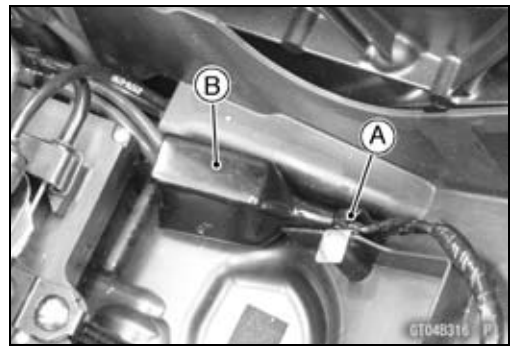

Exhaust Butterfly Valve Actuator (Service Code 63) (DTC P0475)



- Disconnect the exhaust butterfly valve actuator lead connector (2 pins connector) [A].
- Connect a tester to the exhaust butterfly valve actuator connector.
- Measure the exhaust butterfly valve actuator resistance.

Exhaust Butterfly Valve Actuator Resistance
Connections: P lead ←→ GY lead
Standard: 5 ~ 200 Ω (for reference)

★If the reading is 0 or infinity (∞) Ω, replace the exhaust butterfly valve actuator.

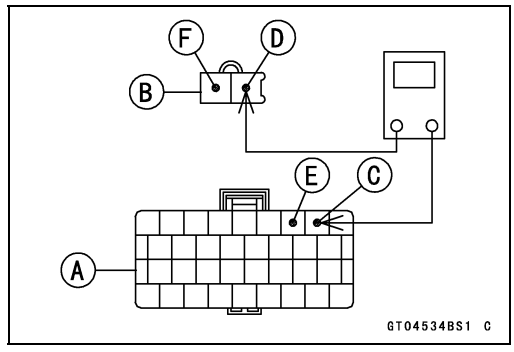

★If the reading is in specification, remove the ECU and check the wiring for continuity between main harness connectors.

○Disconnect the ECU and actuator connectors.

Wiring Continuity Inspection
ECU Connector [A] ←→
Exhaust Butterfly Valve Actuator Connector [B]
ECU Terminal 54 [C] ←→ Actuator Terminal [D]
ECU Terminal 55 [E] ←→ Actuator Terminal [F]

★If the wiring is good, check the ECU for its ground and power supply (see ECU Power Supply Inspection in the Fuel System (DFI) chapter).

★If the ground and power supply are good, replace the ECU (see ECU Removal/Installation in the Fuel System (DFI) chapter).

Exhaust Butterfly Valve Actuator Circuit

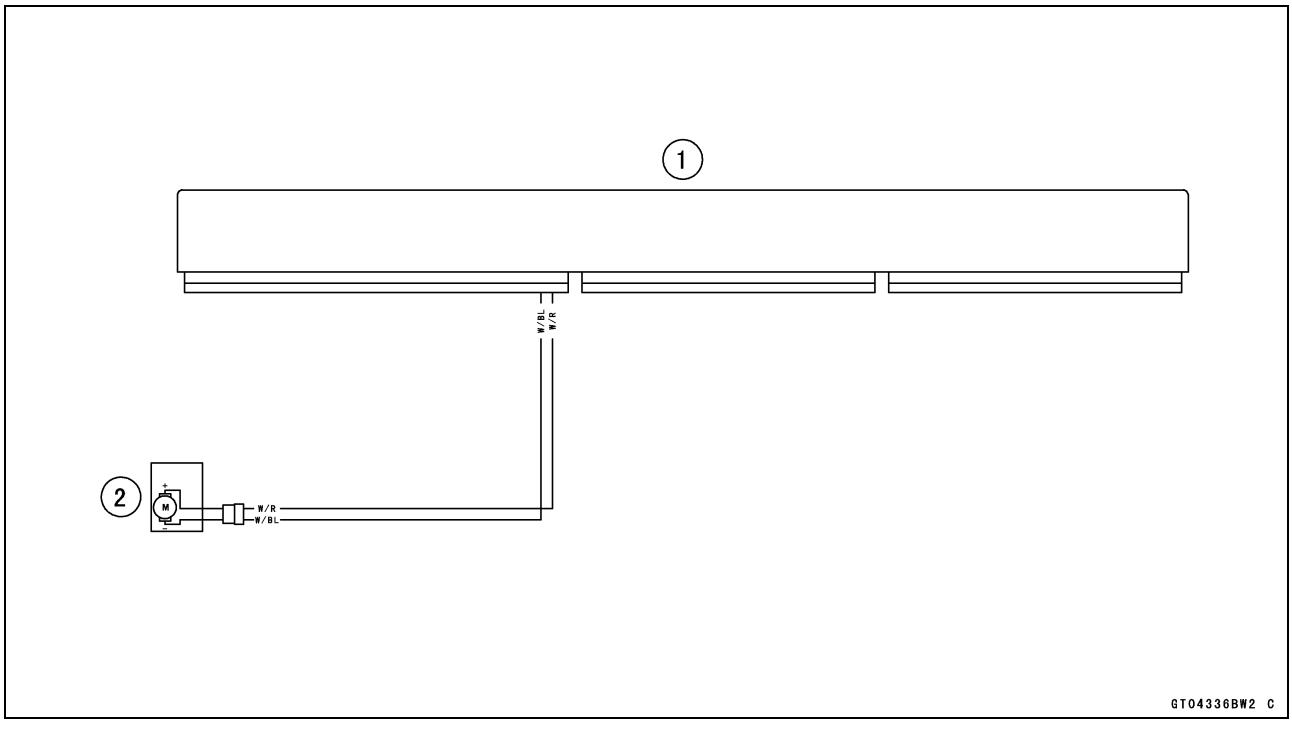

1. ECU
2. Exhaust Butterfly Valve Actuator

Air Switching Valve (Service Code 64) (DTC P0410)

Air Switching Valve Removal/Installation

● Refer to the Air Switching Valve Removal/Installation in the Engine Top End chapter.

Air Switching Valve Inspection

● Refer to the Air Switching Valve Unit Test in the Electrical System chapter.

★If the air switching valve is normal, check the wiring for continuity (see Air Switching Valve Circuit).

★If the wiring is good, check the ECU for its ground and power supply (see ECU Power Supply Inspection in the Fuel System (DFI) chapter).

★If the ground and power supply are good, replace the ECU (see ECU Removal/Installation in the Fuel System (DFI) chapter).

Air Switching Valve Circuit

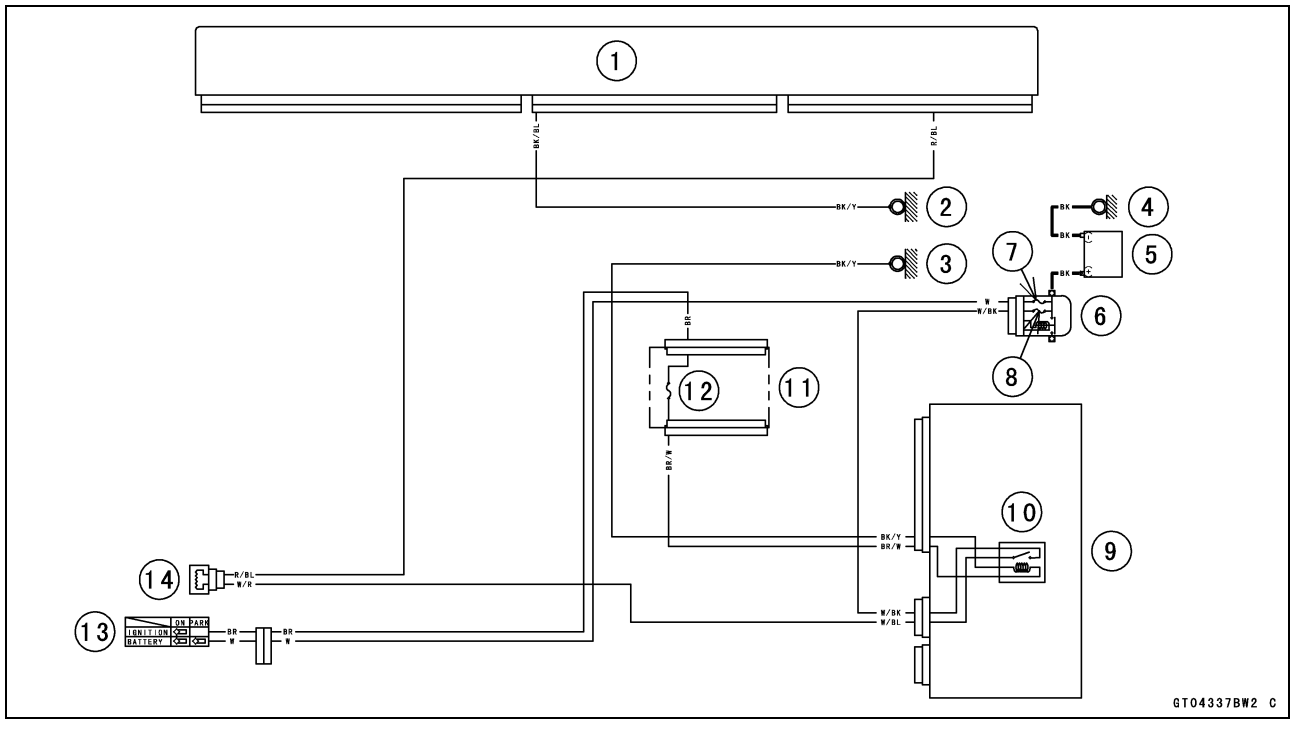

1. ECU
2. Frame Ground (4)
3. Frame Ground (2)
4. Engine Ground
5. Battery 12 V 8.6 Ah
6. Starter Relay
7. Main Fuse 30 A
8. ECU Fuse 15 A
9. Relay Box
10. ECU Main Relay
11. Fuse Box (1)
12. Ignition Fuse 15 A
13. Ignition Switch
14. Air Switching Valve

Oxygen Sensor Heater (Service Code 67) (DTC P0030)

Oxygen Sensor Heater Removal/Installation

The oxygen sensor heater is built in the oxygen sensor. So, the heater itself can not be removed. Remove the oxygen sensor (see Oxygen Sensor Removal in the Electrical System chapter).

Oxygen Sensor Heater Resistance Inspection

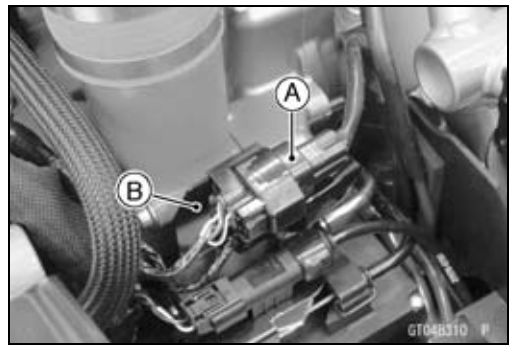

- Remove:
  Fuel Tank (see Fuel Tank Removal in the Fuel System (DFI) chapter)
- Remove the oxygen sensor lead connector [A] from the bracket [B].
- Disconnect:
  Oxygen Sensor Lead Connector

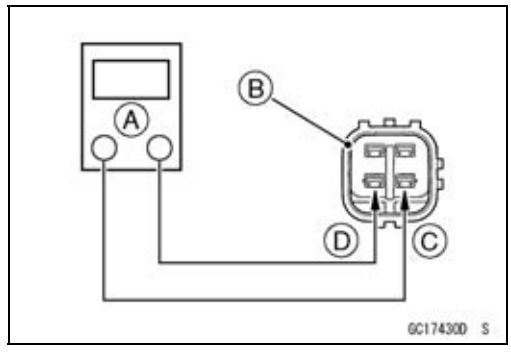

- Connect a digital meter [A] to the oxygen sensor lead connector [B].
- Measure the oxygen sensor heater resistance.

Oxygen Sensor Heaters Resistance
Connections: W lead [C] ←→ W lead [D]
Standard: 13 ~ 17 Ω @20° C (68°F)

★If the reading is out of the standard, replace the sensor.
★If the reading is within the standard, check the power source voltage (see Oxygen Sensor Heater Power Source Voltage Inspection).

Oxygen Sensor Heater (Service Code 67) (DTC P0030)

Oxygen Sensor Heater Power Source Voltage Inspection



NOTE

○*Be sure the battery is fully charged.*

- Turn the ignition switch off.
- Remove:
  Fuel Tank (see Fuel Tank Removal in the Fuel System (DFI) chapter)
- Remove the oxygen sensor lead connector from the bracket.
- Disconnect the oxygen sensor lead connector and connect the measuring adapter [A] between these connectors.
  Main Harness [B]
  Oxygen Sensor [C]

Special Tool - Measuring Adapter: 57001-1700

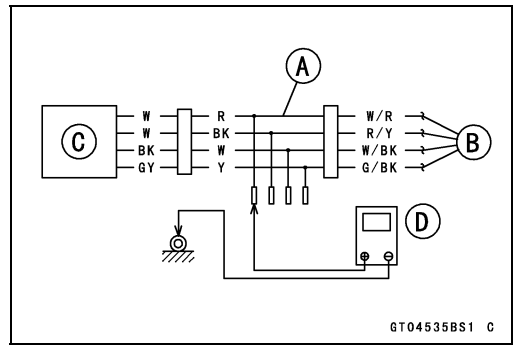

- Connect a digital meter [D] to the measuring adapter lead.

Oxygen Sensor Power Source Voltage
Connections to Adapter:
Digital Meter (+) → R (main harness W/R) lead
Digital Meter (–) → Frame Ground Terminal

- Measure the power source voltage with the engine stopped and with the connector joined.
- Turn the ignition switch on.

Power Source Voltage
Standard: Battery Voltage

- Turn the ignition switch off.

★If the reading is in specification, but the problem still exists, replace the ECU (see ECU Removal/Installation in the Fuel System (DFI) chapter).

★If the reading is out of the standard, check the following.
ECU Fuse 15 A (see Fuse Inspection in the Electrical System chapter)
Power Source Wiring (see Oxygen Sensor Circuit)

★If the fuse and wiring are good, remove the ECU and check the wiring for continuity between main harness connectors.

○Disconnect the ECU and sensor connectors.

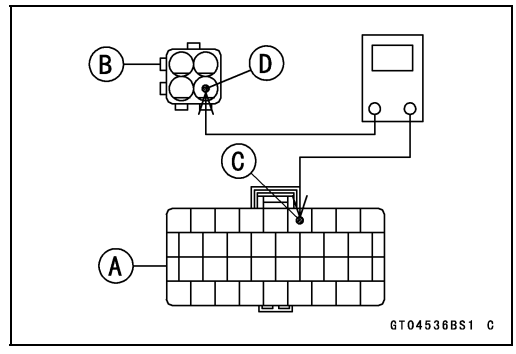

Wiring Continuity Inspection
ECU Connector [A] ←→
Oxygen Sensor Connector [B]
ECU Terminal 56 [C] ←→ Sensor Terminal [D]

★If the wiring is good, check the ECU for its ground and power supply (see ECU Power Supply Inspection in the Fuel System (DFI) chapter).

★If the ground and power supply are good, replace the ECU (see ECU Removal/Installation in the Fuel System (DFI) chapter).

Oxygen Sensor Heater (Service Code 67) (DTC P0030)

Oxygen Sensor Circuit

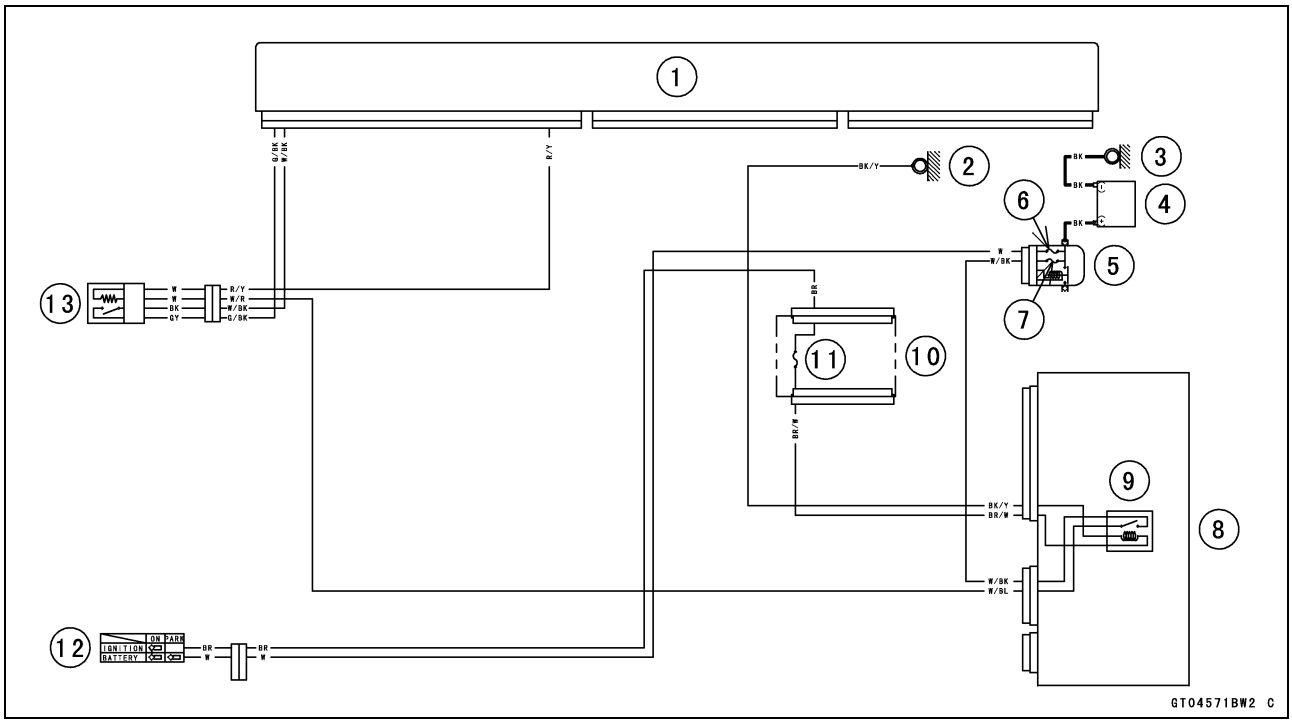

1. ECU
2. Frame Ground (2)
3. Engine Ground
4. Battery 12 V 8.6 Ah
5. Starter Relay
6. Main Fuse 30 A
7. ECU Fuse 15 A
8. Relay Box
9. ECU Main Relay
10. Fuse Box (1)
11. Ignition Fuse 15 A
12. Ignition Switch
13. Oxygen Sensor

Knock Sensor (Service Code 69) (DTC P0325)

Knock Sensor Removal

NOTICE
Never drop the knock sensor especially on a hard surface. Such a shock to the sensor can damage it.

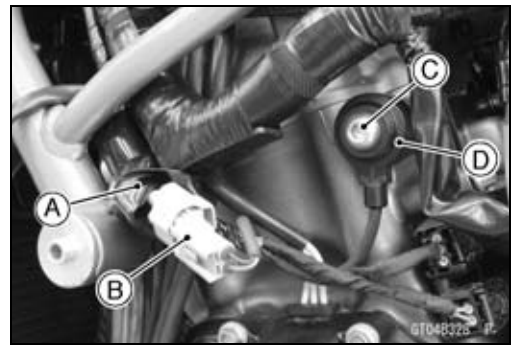

- Remove:
  Rear Intake Duct (see Intake Duct Removal in the Frame chapter)
- Slide the dust cover [A].
- Disconnect the knock sensor lead connector [B].
- Remove:
  Knock Sensor Bolt [C]
  Knock Sensor [D]

Knock Sensor Installation

- Installation is the reverse of removal.

○When installing the sensor which is fastened by bolt, tighten the bolt after placing the sensor on the bottom surface completely.

- Tighten:

Torque - Knock Sensor Bolt: 25 N·m (2.5 kgf·m, 18 ft·lb)

Knock Sensor Resistance Inspection

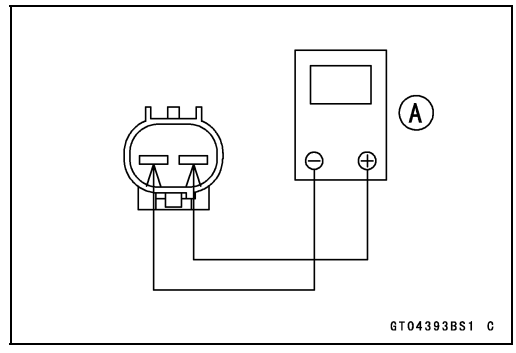

- Turn the ignition switch off.
- Remove:
  Rear Intake Duct (see Intake Duct Removal in the Frame chapter)
- Slide the dust cover.
- Disconnect the knock sensor lead connector.
- Connect a digital meter [A] to the terminals of the knock sensor.
- Measure the knock sensor resistance.

Knock Sensor Resistance
Standard: 504 ~ 616 kΩ

★If the reading is out of the standard, replace the knock sensor.

★If the reading is within the standard, check the wiring for continuity (see Knock Sensor Circuit).

★If the wiring is good, check the ECU for its ground and power supply (see ECU Power Supply Inspection in the Fuel System (DFI) chapter).

★If the ground and power supply are good, replace the ECU (see ECU Removal/Installation in the Fuel System (DFI) chapter).

Knock Sensor (Service Code 69) (DTC P0325)

Knock Sensor Circuit

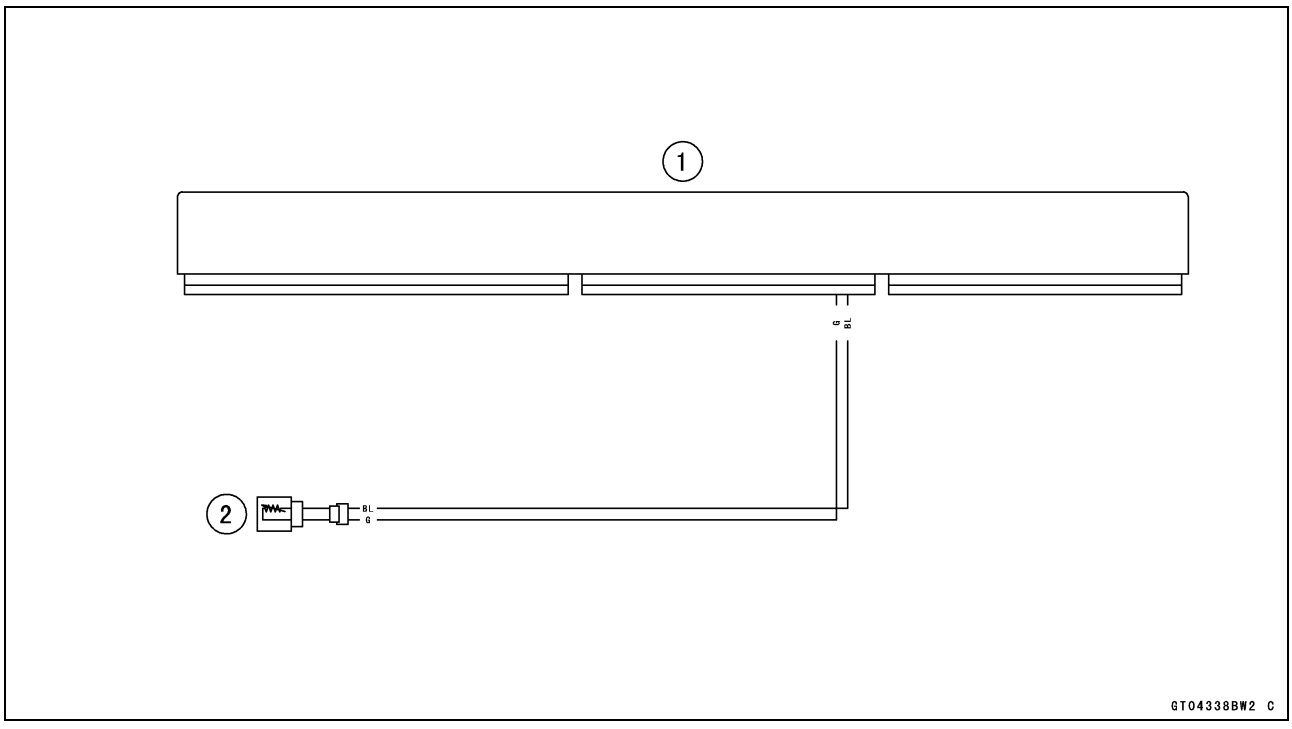

1. ECU
2. Knock Sensor

Purge Valve (for Supercharger) (Service Code 6A) (DTC P0045)

Purge Valve (for Supercharger) Removal/Installation

- Remove:
  Fuel Tank (see Fuel Tank Removal in the Fuel System (DFI) chapter)
- For other than US, CA Models, remove the canister (see Evaporative Emission Control System Inspection (Other than US, CA Models) in the Periodic Maintenance chapter).
- Remove the air suction valve cover bolt [A].

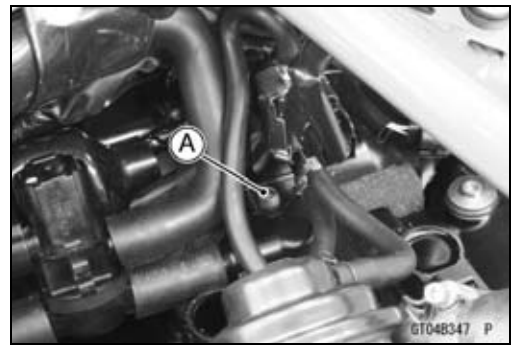

- Disconnect the purge valve connector [A].
- Slide the clamps [B].
- Disconnect the hoses [C].
- Remove:
  Nut [D]
  Purge Valve [E]
- Installation is the reverse of removal.
- Run the hoses correctly (see Cable, Wire, and Hose Routing section in the Appendix chapter).

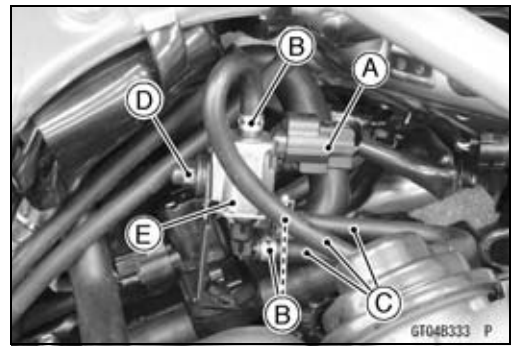

Purge Valve (for Supercharger) Inspection

- Remove the purge valve (see Purge Valve (for Supercharger) Removal/Installation).
- Connect a digital meter [A] to the purge valve terminals as shown.

Purge Valve Resistance
Standard: 22 ~ 26 Ω @20°C (68°F)

★If the resistance reading is out of the specified value, replace it with a new one.

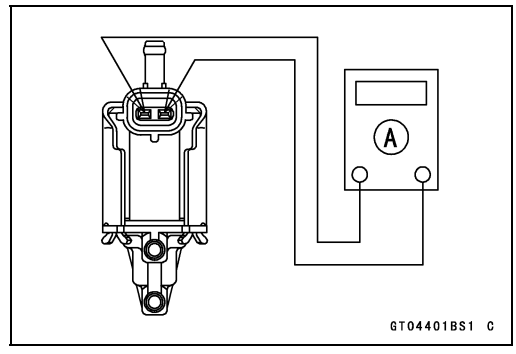

- Connect the 12 V battery [A] to the purge valve terminals as shown.

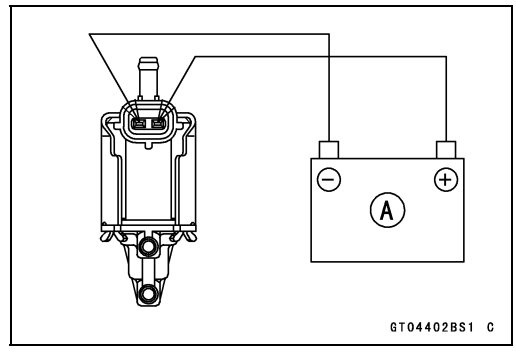

- Blow the air to the intake air duct [A], and make sure that the air flows from the outlet air duct [B].

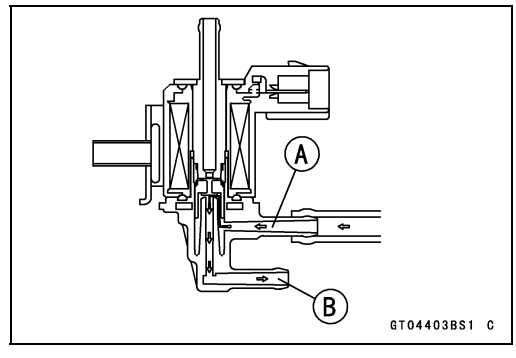

Purge Valve (for Supercharger) (Service Code 6A) (DTC P0045)

- Disconnect the 12 V battery.
- Blow the air to the intake air duct [A] again, and make sure that the air does not flow from the outlet air duct [B].

★If the purge valve does not operate as described, replace it with a new one.

★If the purge valve is good, check the wiring for continuity (see Purge Valve (for Supercharger) Circuit).

★If the wiring is good, check the ECU for its ground and power supply (see ECU Power Supply Inspection in the Fuel System (DFI) chapter).

★If the ground and power supply are good, replace the ECU (see ECU Removal/Installation in the Fuel System (DFI) chapter).

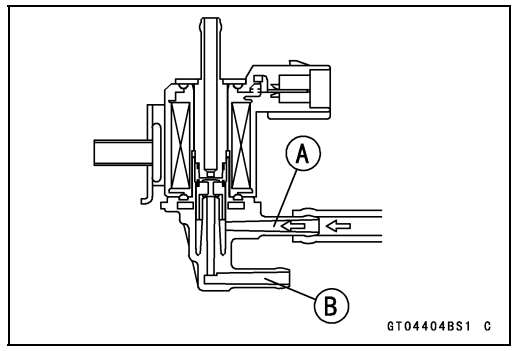

Purge Valve (for Supercharger) Circuit

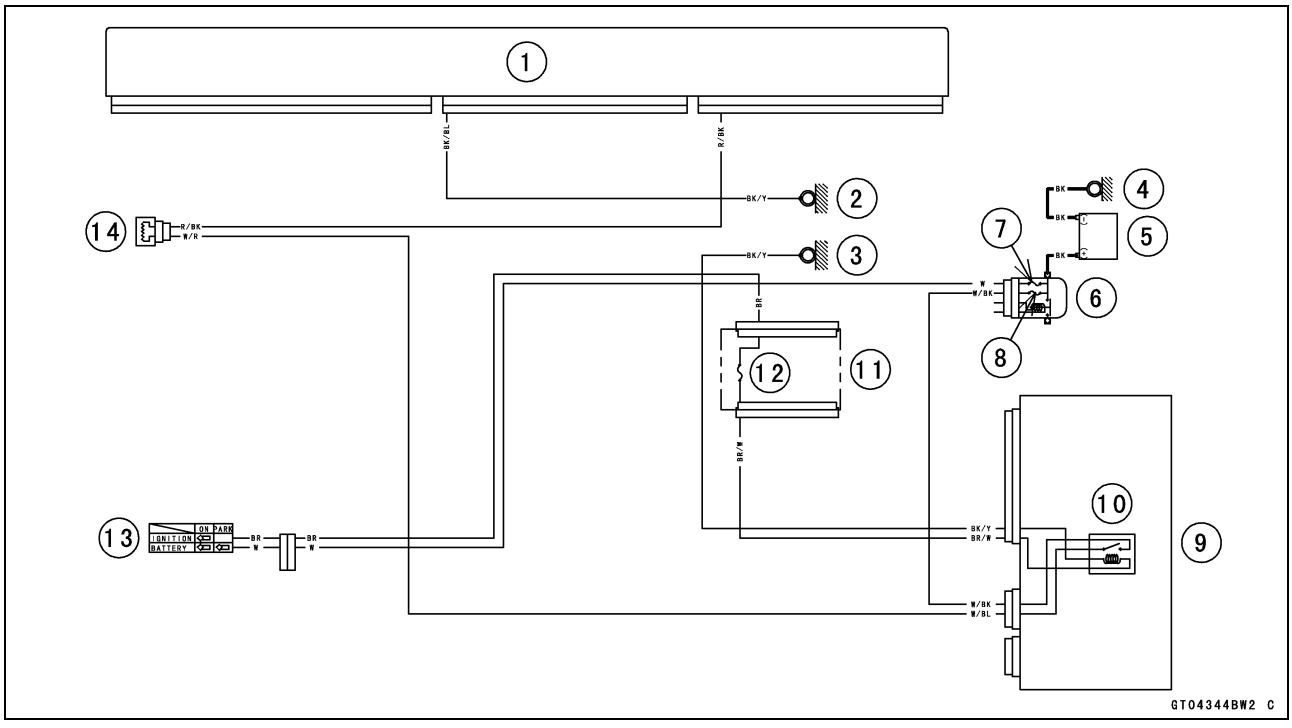

1. ECU
2. Frame Ground (4)
3. Frame Ground (2)
4. Engine Ground
5. Battery 12 V 8.6 Ah
6. Starter Relay
7. Main Fuse 30 A
8. ECU Fuse 15 A
9. Relay Box
10. ECU Main Relay
11. Fuse Box (1)
12. Ignition Fuse 15 A
13. Ignition Switch
14. Purge Valve (for Supercharger)

Air Intake Chamber Pressure Sensor (Service Code 7E) (DTC P0235, P0237)

Air Intake Chamber Pressure/Temperature Sensor Removal

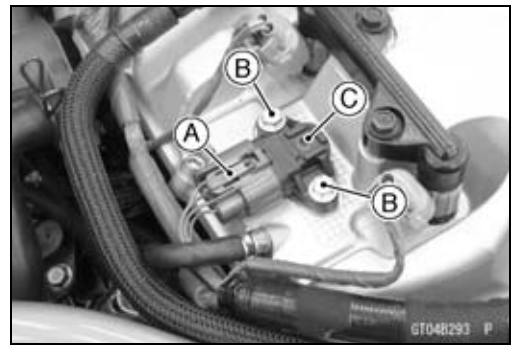

NOTICE

Never drop the sensor especially on a hard surface. Such a shock to the sensor can damage it.

- Remove the fuel tank (see Fuel Tank Removal in the Fuel System (DFI) chapter).
- Disconnect the air intake chamber pressure/temperature sensor connector [A].
- Remove:
  Air Intake Chamber Pressure/Temperature Sensor Bolts [B]
  Air Intake Chamber Pressure/Temperature Sensor [C]

Air Intake Chamber Pressure/Temperature Sensor Installation

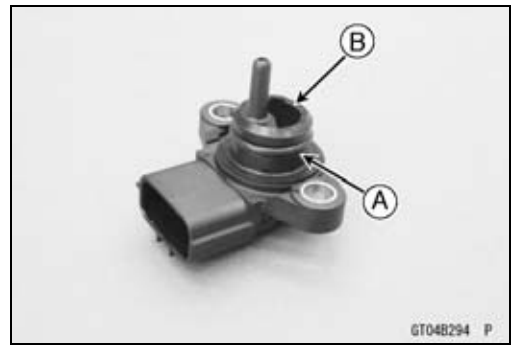

- Be sure to install the O-ring [A].
- Apply engine oil to the O-ring.
- Install the air intake chamber pressure/temperature sensor to the air intake chamber.

○When installing the sensor which is fastened by bolts, tighten the bolts after placing the sensor on the bottom surface completely.

- Tighten:

Torque - Air Intake Chamber Pressure/Temperature Sensor Bolts: 5.0 N·m (0.51 kgf·m, 44 in·lb)

- Connect the air intake chamber pressure/temperature sensor connector.
- Install the fuel tank (see Fuel Tank Installation in the Fuel System (DFI) chapter).

NOTE

○*Do not apply engine oil into the hole [B] that senses the pressure.*

Air Intake Chamber Pressure Sensor (Service Code 7E) (DTC P0235, P0237)

Air Intake Chamber Pressure Sensor Input Voltage Inspection

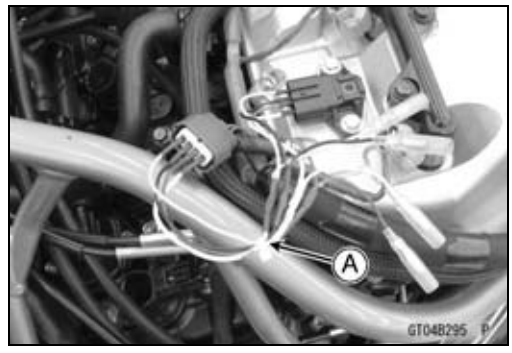

NOTE

○*Be sure the battery is fully charged.*

- Turn the ignition switch off.
- Remove fuel tank (see Fuel Tank Removal in the Fuel System (DFI) chapter).
- Disconnect the air intake chamber pressure/temperature sensor connector and connect the measuring adapter [A] between these connectors as shown.
  Main Harness [B]
  Air Intake Chamber Pressure/Temperature Sensor [C]

Special Tool - Measuring Adapter: 57001-1700

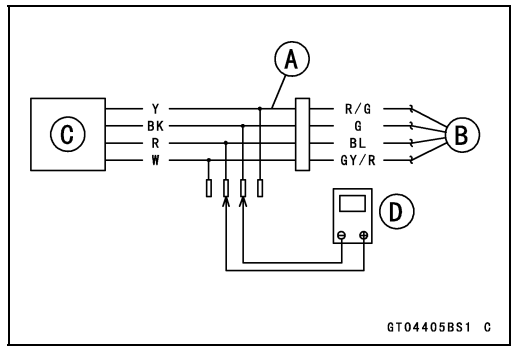

- Connect a digital meter [D] to the measuring adapter leads.

Air Intake Chamber Pressure Sensor Input Voltage
Connections to Adapter:

Digital Meter (+) → R (sensor BL) lead

Digital Meter (–) → BK (sensor G) lead

- Measure the input voltage with the engine stopped and with the connector joined.
- Turn the ignition switch on.

Input Voltage
Standard: DC 4.75 ~ 5.25 V

- Turn the ignition switch off.

★If the reading is within standard, check the output voltage (see Air Intake Chamber Pressure Sensor Output Voltage Inspection).

★If the reading is out of the standard, remove the ECU and check the wiring for continuity between main harness connectors.

○Disconnect the ECU and sensor connectors.

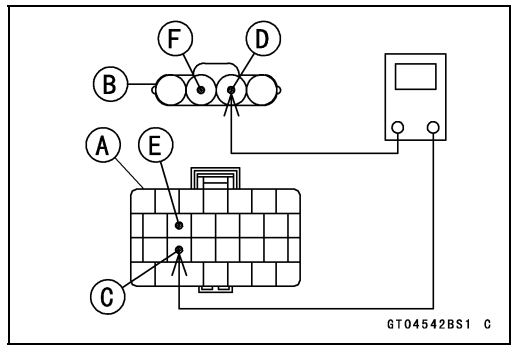

Wiring Continuity Inspection
ECU Connector [A] ←→

Air Intake Chamber Pressure/Temperature Sensor Connector [B]

ECU Terminal 44 [C] ←→ Sensor Terminal [D]

ECU Terminal 38 [E] ←→ Sensor Terminal [F]

★If the wiring is good, check the ECU for its ground and power supply (see ECU Power Supply Inspection in the Fuel System (DFI) chapter).

★If the ground and power supply are good, replace the ECU (see ECU Removal/Installation in the Fuel System (DFI) chapter).

Air Intake Chamber Pressure Sensor (Service Code 7E) (DTC P0235, P0237)

Air Intake Chamber Pressure Sensor Output Voltage Inspection

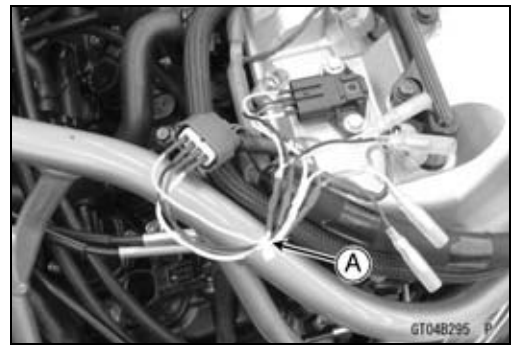

- Measure the output voltage at the air intake chamber pressure sensor in the same way as input voltage inspection, note the following.

○Disconnect the air intake chamber pressure sensor connector and connect the measuring adapter [A] between these connectors.
Main Harness [B]
Air Intake Chamber Pressure/Temperature Sensor [C]
Digital Meter [D]

Special Tool - Measuring Adapter: 57001-1700

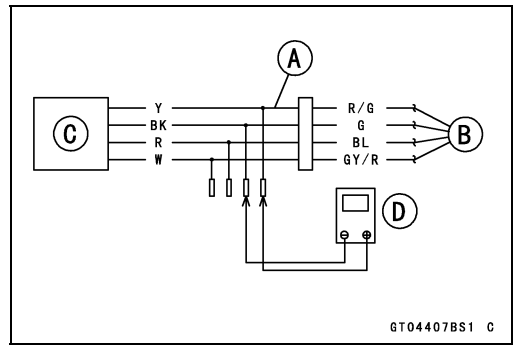

Air Intake Chamber Pressure Sensor Output Voltage
Connections to Adapter:
Digital Meter (+) → Y (sensor R/G) lead
Digital Meter (–) → BK (sensor G) lead

- Measure the output voltage with the engine stopped and with the connector joined.
- Turn the ignition switch on.

Output Voltage
Usable Range: DC 1.43 ~ 1.55 V at standard atmospheric pressure (101.32 kPa, 76 cmHg)

NOTE

○*The output voltage changes according to local atmospheric pressure.*

- Turn the ignition switch off.

★If the reading is out of the usable range, replace the sensor.

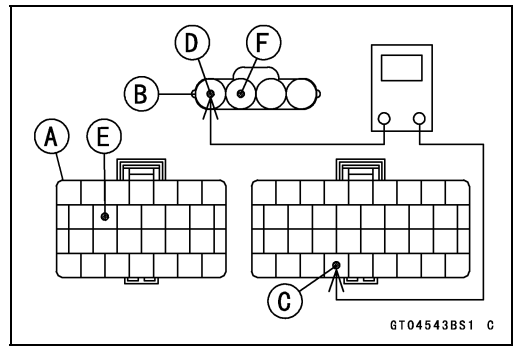

★If the reading is within the usable range, remove the ECU and check the wiring for continuity between main harness connectors.

○Disconnect the ECU and sensor connectors.

Wiring Continuity Inspection
ECU Connector [A] ←→
Air Intake Chamber Pressure/Temperature Sensor Connector [B]
ECU terminal 83 [C] ←→ Sensor Terminal [D]
ECU terminal 38 [E] ←→ Sensor Terminal [F]

★If the wiring is good, check the ECU for its ground and power supply (see ECU Power Supply Inspection in the Fuel System (DFI) chapter).

★If the ground and power supply are good, replace the ECU (see ECU Removal/Installation in the Fuel System (DFI) chapter).

Air Intake Chamber Pressure Sensor (Service Code 7E) (DTC P0235, P0237)

Air Intake Chamber Pressure Sensor Circuit

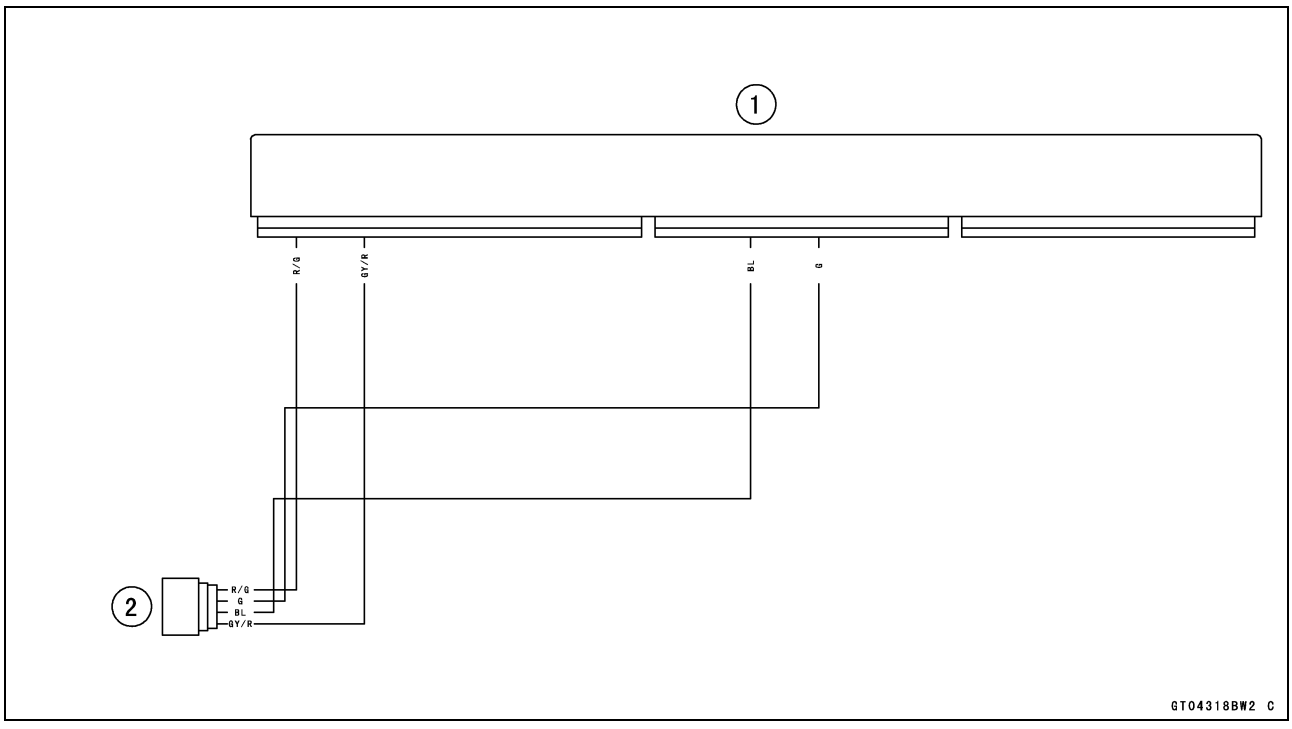

1. ECU
2. Air Intake Chamber Pressure/Temperature Sensor

Fuel Supply System (Service Code 94) (DTC P0170)

Fuel Supply System Inspection

NOTE

○*If the motorcycle has any other service code, first inspect the other service code.*

● Inspect the General fuel system (throttle body assy, air cleaner, fuel tank etc.).

★If the General fuel system is good, check the ECU for its ground and power supply (see ECU Power Supply Inspection).

★If the ground and power supply are good, replace the ECU (see ECU Removal/Installation).

Battery Voltage (Service Code 97) (DTC P0562)

Battery Voltage Inspection

- Refer to the Charging Condition Inspection in the Electrical System chapter for battery voltage inspection.

★If the battery voltage is good condition, replace the ECU (see ECU Removal/Installation in the Fuel System (DFI) chapter).

Battery Monitor Circuit

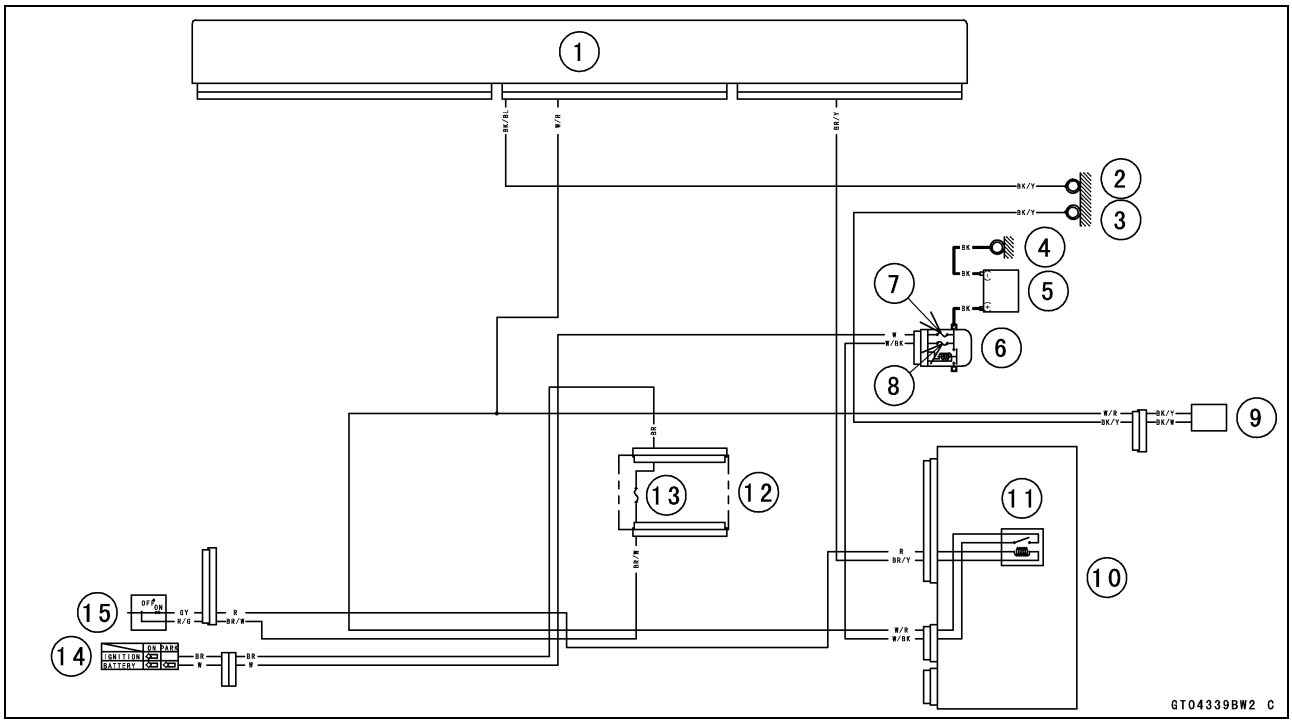

1. ECU
2. Frame Ground (4)
3. Frame Ground (3)
4. Engine Ground
5. Battery 12 V 8.6 Ah
6. Starter Relay
7. Main Fuse 30 A
8. ECU Fuse 15 A
9. Fuel Pump
10. Relay Box
11. Fuel Pump Relay
12. Fuse Box (1)
13. Ignition Fuse 15 A
14. Ignition Switch
15. Engine Start/Stop Switch (Engine Stop)

ETV Control Circuit (Service Code 98) (DTC P0607)

ETV Control Circuit Inspection



○The ETV control circuit is controlled in the ECU [A].
So, the ETV control circuit cannot be inspected.

● When the service code 98 is displayed on the LCD, replace the ECU (see ECU Removal/Installation in the Fuel System (DFI) chapter).

ESD Actuator Error (Service Code E2E)

ESD Actuator Removal

○In this model, ESD actuator is built in the electronic steering damper unit.

● Refer to the Electronic Steering Damper Removal in the Steering chapter.

ESD Actuator Installation

● Refer to the Electronic Steering Damper Installation in the Steering chapter.

ESD Actuator Resistance Inspection

● Turn the ignition switch off.

● Remove the electronic steering damper unit (see Electronic Steering Damper Removal in the Steering chapter).

● Connect a digital meter to the ESD actuator connector [A].

● Measure the ESD actuator resistance.

ESD Actuator Resistance

Connections: **BK lead [1] ←→ O lead [3]**

R lead [2] ←→Y lead [4]

Standard: **About 23 ~ 29 Ω**

★If the reading is out of the standard, replace the electronic steering damper unit.

★If the reading is within the standard, check the input voltage (see ESD Actuator Input Voltage Inspection).

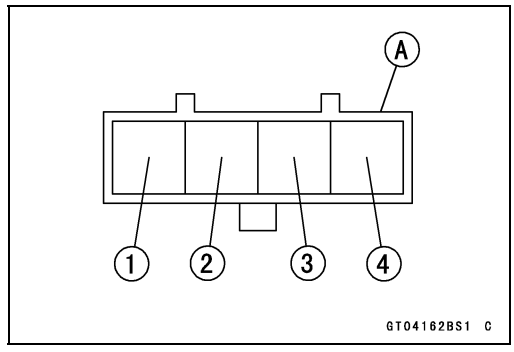

ESD Actuator Error (Service Code E2E)

ESD Actuator Input Voltage Inspection



NOTE

○*Be sure the battery is fully charged.*

- Turn the ignition switch off.
- Disconnect the ESD actuator connector and connect a suitable measuring leads [A] between these connectors as shown.
  Main Harness [B]
  ESD Actuator [C]
- Connect the peak voltage adapter [D] and a digital meter [E] to the measuring adapter leads.

Special Tool - Peak Voltage Adapter: 57001-1415
Type: KEK-54-9-B

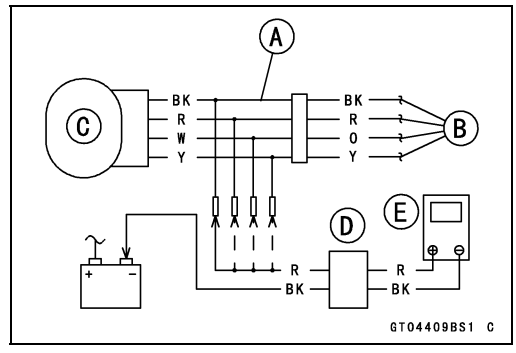

ESD Actuator Input Voltage
Connections to Adapter:

(I) Digital Meter (+) → BK (actuator BK) lead
Digital Meter (–) → Battery (–) Terminal
(II) Digital Meter (+) → R (actuator R) lead
Digital Meter (–) → Battery (–) Terminal
(III) Digital Meter (+) → W (actuator O) lead
Digital Meter (–) → Battery (–) Terminal
(IV) Digital Meter (+) → Y (actuator Y) lead
Digital Meter (–) → Battery (–) Terminal

- Measure the actuator input voltage with the engine stopped and with the connector joined.
- Turn the ignition switch on.

Input Voltage
Standard: About DC 9 ~ 11 V and then 0.1 V or
About DC 9 ~ 11 V

- Turn the ignition switch off.

★If the reading is out of the specification, remove the ESD ECU and check the wiring for continuity between main harness connectors.

○Disconnect the ESD ECU and actuator connectors.

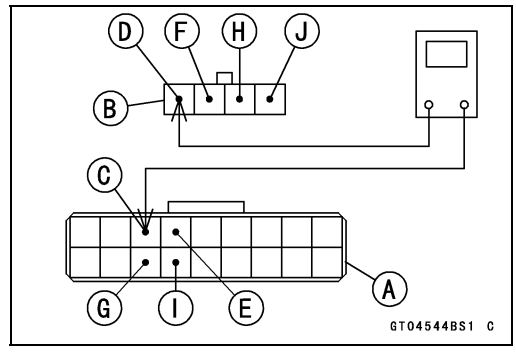

Wiring Continuity Inspection
ESD ECU Connector [A] ←→
ESD Actuator Connector [B]
ESD ECU Terminal 3 [C] ←→ Actuator Terminal [D]
ESD ECU Terminal 4 [E] ←→ Actuator Terminal [F]
ESD ECU Terminal 12 [G] ←→ Actuator Terminal [H]
ESD ECU Terminal 13 [I] ←→ Actuator Terminal [J]

★If the wiring is good, check the ESD ECU for its ground and power supply (see ESD ECU Power Supply Inspection).

★If the ground and power supply are good, replace the ESD ECU (see ESD ECU Removal/Installation in the Steering chapter).

ESD Actuator Error (Service Code E2E)

ESD Actuator Circuit

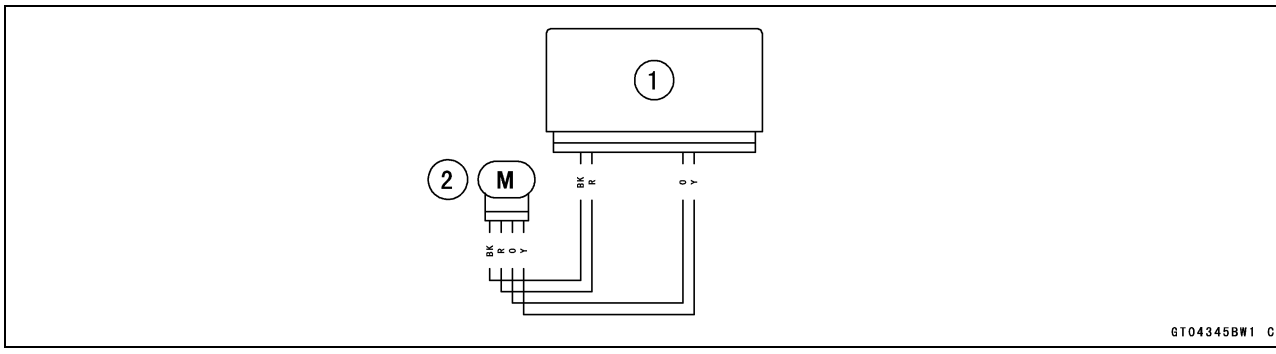

1. ESD ECU
2. ESD Actuator

ESD ECU Error (Service Code E3B)

The white ESD indicator light (LED) may blink and yellow warning indicator light (LED) may go on when the ignition switch is turned on with the motorcycle moving. If this happens, first turn the ignition switch off, and then back on with the motorcycle completely stopped. The white ESD indicator light (LED) and yellow warning indicator light (LED) should then go off. If they does not go off, check the following.

★If this service code appears, check that the following parts are correctly.
Crankshaft Sensor
Gear Position Sensor
Starter Lockout Switch
Throttle Position Sensor
Rear Wheel Rotation Sensor

★If these parts are normal, check the ESD ECU for its ground and power supply (see ESD ECU Power Supply Inspection).

ESD ECU Removal

● Refer to the ESD ECU Removal in the Steering chapter.

ESD ECU Installation

● Refer to the ESD ECU Installation in the Steering chapter.

ESD ECU Power Supply Inspection

● Remove:
Upper Fairing (see Upper Fairing Removal in the Frame chapter)

● Visually inspect the ESD ECU connectors.

★If the connector is clogged with mud or dust, blow it off with compressed air.

● Remove the ESD ECU (see ESD ECU Removal in the Steering chapter).

● Visually inspect the terminals [A] of the ESD ECU and main harness connectors.

★If the terminals of the main harness connector are damaged, replace the main harness.

★If the terminals of the ESD ECU connector are damaged, replace the ESD ECU.



● Turn the ignition switch off.

● Disconnect the ESD ECU connector [A].

● Set a tester [B] and check the following wiring for continuity.

ESD ECU Grounding Inspection
Connections:
(I) BK/Y lead (ESD ECU terminal 9) ←→ Battery (–) Terminal
(II) Engine Ground ←→ Battery (–) Terminal
Criteria:
Both: 0 Ω

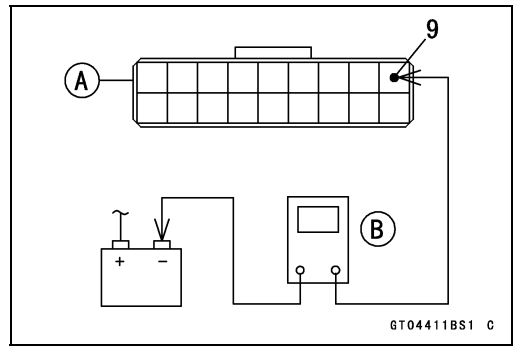

★If no continuity, check the connector, the engine ground lead, or main harness, and repair or replace them if necessary.

ESD ECU Error (Service Code E3B)

★If the wiring is good, check the power source voltage of the ESD ECU.

NOTE

○*Be sure the battery is fully charged.*

- Connect the ESD ECU connector.
- Connect a digital meter [A] to the connector [B] with the needle adapter set.

Special Tool - Needle Adapter Set: 57001-1457

ESD ECU Power Supply Inspection

Connections:

Digital Meter (+) → Terminal 18 (BR/BK)

Digital Meter (–) → Battery (–) Terminal

Ignition Switch OFF: 0 V

Ignition Switch ON: Battery Voltage

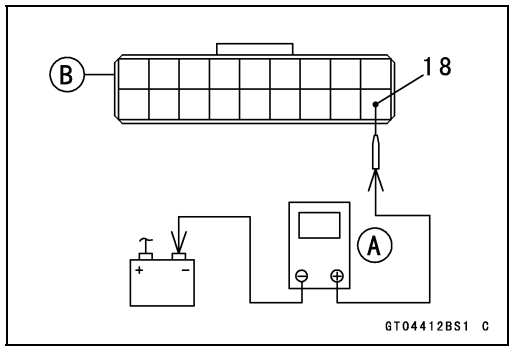

★If the reading is out of the specification, check the following.

Main Fuse 30 A (see Fuse Inspection in the Electrical System chapter)

Electronic Steering Damper Fuse 10 A (see Fuse Inspection in the Electrical System chapter)

Power Source Wiring (see ESD ECU Power Source Circuit)

★If the fuse and wiring are good, replace the ESD ECU (see ESD ECU Removal/Installation in the Steering chapter).

ESD ECU Error (Service Code E3B)

ESD ECU Power Source Circuit

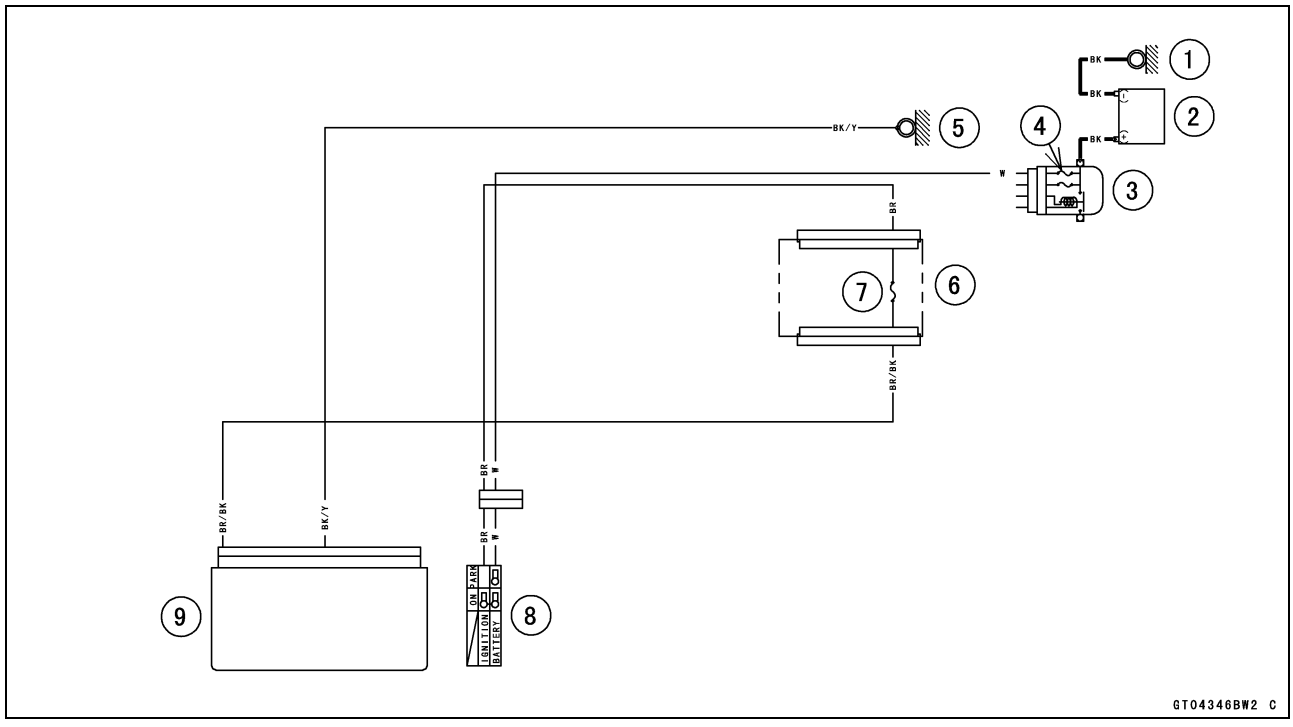

1. Engine Ground
2. Battery 12 V 8.6 Ah
3. Starter Relay
4. Main Fuse 30 A
5. Frame Ground (3)
6. Fuse Box (1)
7. Electronic Steering Damper Fuse 10 A
8. Ignition Switch
9. ESD ECU

ESD Calibration Error (Service Code E3F)

The ESD ECU operates the ESD actuator for initial calibration when the ignition switch is turned on. When the ignition switch is turned on while moving the vehicle, the ESD ECU stops the initial calibration. At this time, the white ESD indicator light (LED) blinks and the yellow warning indicator light (LED) goes on.

★If this service code appears, first turn the ignition switch off, and then back on while completely stopping the motorcycle. The white ESD indicator light (LED) and the yellow warning indicator light (LED) should then go off.

★If they do not go off, check the ESD ECU for its ground and power supply (see ESD ECU Power Supply Inspection in the ESD ECU Error (Service Code E3B) section).

★If the ESD ECU is normal, check the ECU for its ground and power supply (see ECU Power Supply Inspection in the Fuel System (DFI) chapter).

★If the ground and power supply are good, replace the ECU (see ECU Removal/Installation in the Fuel System (DFI) chapter).

IMU (Inertial Measurement Unit) (Service Code E8E)

IMU Removal

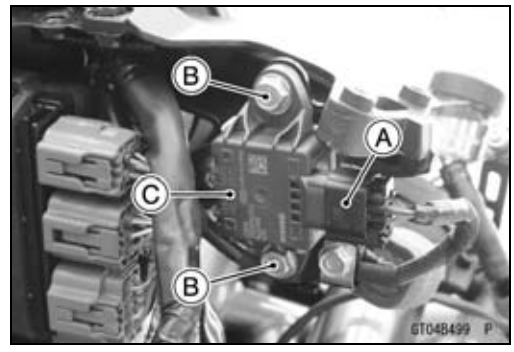

NOTICE
Never drop the IMU especially on a hard surface. Such a shock to the IMU can damage it.

- Remove the upper fairing (see Upper Fairing Removal in the Frame chapter).
- Disconnect the IMU connector [A].
- Remove:
  IMU Mounting Bolts [B] and Washers
  IMU [C]

IMU Installation

- Install the IMU.
- Apply a non-permanent locking agent to the threads of the IMU mounting bolts, and tighten them.

Torque - IMU Mounting Bolts: 6.5 N·m (0.66 kgf·m, 58 in·lb)

- Connect the IMU connector.
- Install the upper fairing (see Upper Fairing Installation in the Frame chapter).

IMU Power Supply Inspection

NOTE

○*Be sure the battery is fully charged.*

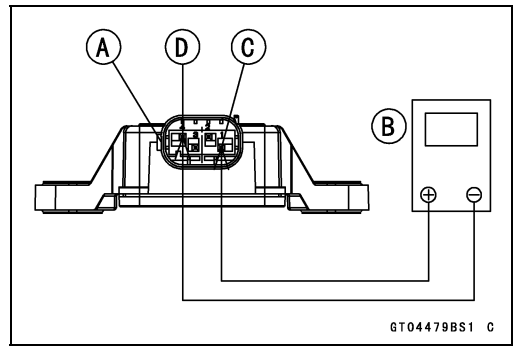

- Turn the ignition switch off.
- Remove the IMU (see IMU Removal).

○Do not disconnect the IMU connector [A].

- Connect a digital meter [B] to the IMU connector with needle adapter set.

Special Tool - Needle Adapter Set: 57001-1457

IMU Power Supply Voltage
Connections to IMU Connector:
Digital Meter (+) → BR/W [C] lead
Digital Meter (–) → BK/Y [D] lead

- Measure the power supply voltage with the engine stopped and with the connector joined.
- Turn the ignition switch on.

Power Supply Voltage
Standard: Battery Voltage

- Turn the ignition switch off.

IMU (Inertial Measurement Unit) (Service Code E8E)

★If the reading is out of the specification, check the following.
Main Fuse 30 A (see Fuse Inspection in the Electrical System chapter)
Ignition Fuse 15 A (see Fuse Inspection in the Electrical System chapter)
Power Source and Ground Wirings (see IMU Circuit)
★If the fuses and wirings are good, replace the IMU (see IMU Installation).
★If the IMU is normal, check the ECU for its ground and power supply (see ECU Power Supply Inspection in the Fuel System (DFI) chapter).
★If the ground and power supply are good, replace the ECU (see ECU Removal/Installation in the Fuel System (DFI) chapter).

IMU Circuit

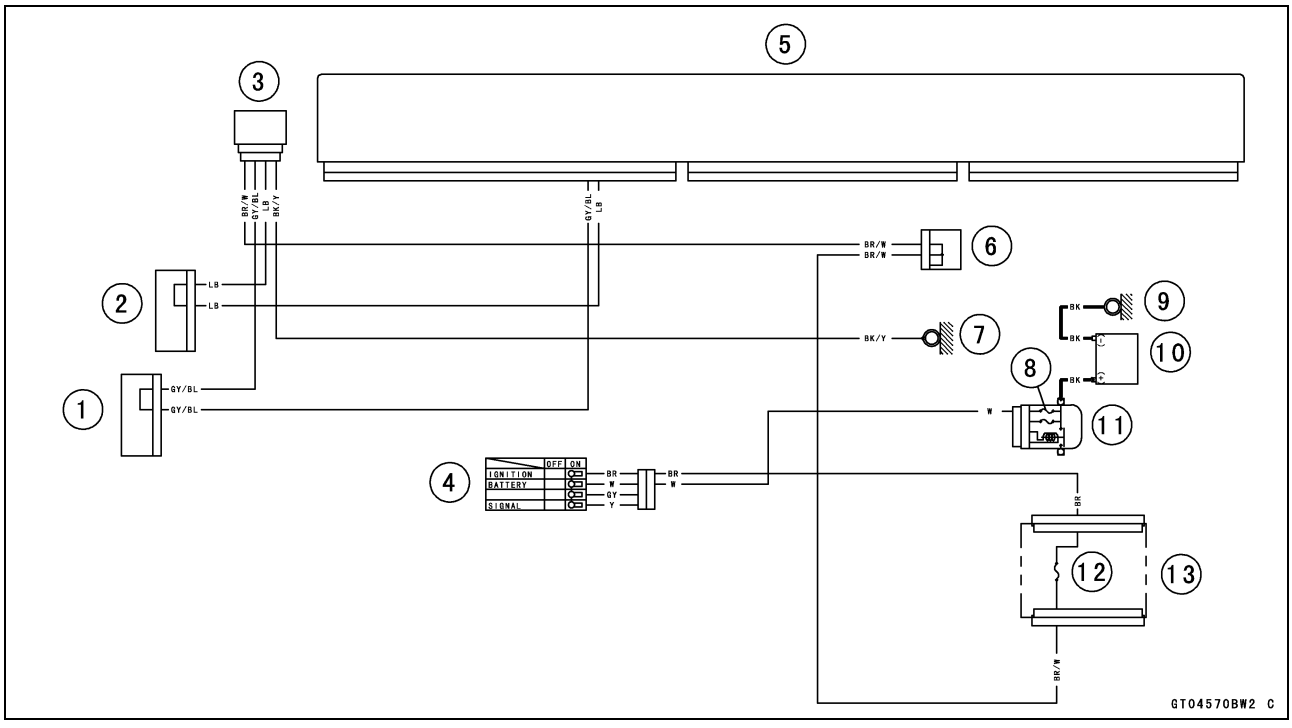

1. Joint Connector N
2. Joint Connector I
3. IMU
4. Ignition Switch
5. ECU
6. Joint Connector F
7. Frame Ground (4)
8. Main Fuse 30 A
9. Engine Ground
10. Battery 12 V 8.6 Ah
11. Starter Relay
12. Ignition Fuse 15 A
13. Fuse Box (1)

IMU (Inertial Measurement Unit) Communication Error (Service Code E8F)

IMU Communication Line Inspection

○When the data (for status of IMU) is not sent from the IMU to the ECU, the service code E8F is displayed.
○The data is sent through the CAN communication line.
○The service code E8F is detected with the ECU.

○When the service code E8F is detected, the IMU indicator [A] blinks, yellow warning indicator light (LED) [B] goes on and code of E8F [C] displayed on the LCD.

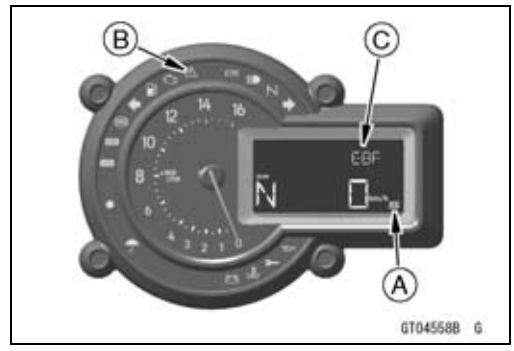

● Disconnect the ECU and IMU connectors, and check the wiring for continuity between main harness connectors.

Wiring Continuity Inspection
ECU Connector [A] ←→ IMU Connector [B]
ECU Terminal 60 [C] ←→ IMU Terminal [D]
ECU Terminal 61 [E] ←→ IMU Terminal [F]

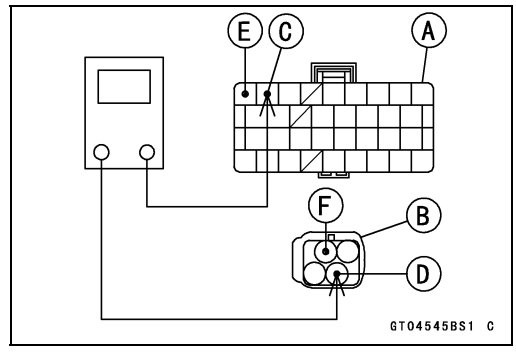

★If the wiring is good, replace the IMU (see IMU Installation).
★If the IMU is normal, check the ECU for its ground and power supply (see ECU Power Supply Inspection in the Fuel System (DFI) chapter).
★If the ground and power supply are good, replace the ECU (see ECU Removal/Installation in the Fuel System (DFI) chapter).

IMU (Inertial Measurement Unit) Communication Error (Service Code E8F)

IMU Circuit

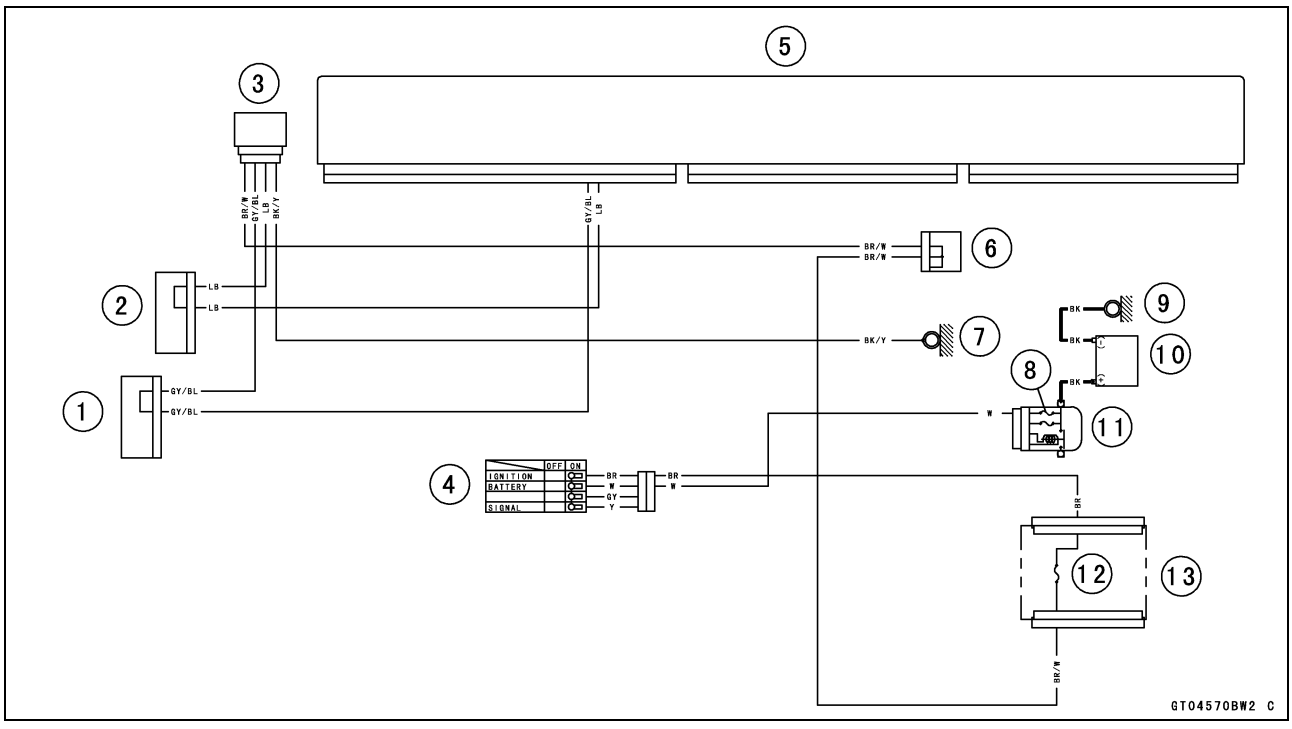

1. Joint Connector N
2. Joint Connector I
3. IMU
4. Ignition Switch
5. ECU
6. Joint Connector F
7. Frame Ground (4)
8. Main Fuse 30 A
9. Engine Ground
10. Battery 12 V 8.6 Ah
11. Starter Relay
12. Ignition Fuse 15 A
13. Fuse Box (1)

ABS Service Codes

Solenoid Valve Inspection (Service Code B13, B14, B17, B18)

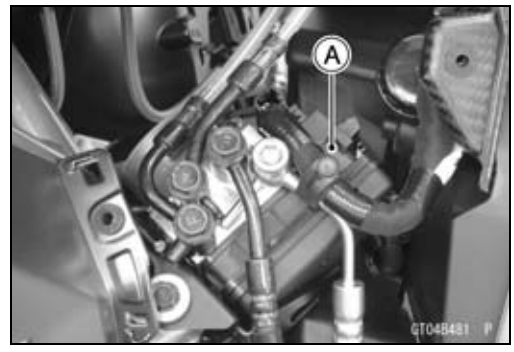

○The solenoid valve is built in the ABS hydraulic unit [A]. Therefore the solenoid valve cannot be checked directly.
● Perform the Pre-Diagnosis Inspection 1 and 2 (see Inquiries to Rider in the Brakes chapter).
★If any of these service codes appears even if all checks are ended, replace the ABS hydraulic unit.
★If the service code does not appear, the ABS system normal (temporary failure).

ABS Solenoid Valve Relay Inspection (Service Code B19)

○The ABS solenoid valve relay is built in the ABS hydraulic unit. Therefore the relay cannot be checked directly.
● Perform the Pre-Diagnosis Inspection 1 and 2 (see Inquiries to Rider in the Brakes chapter).
★If this service code appears even if all checks are ended, replace the ABS hydraulic unit.
★If the service code does not appear, the ABS system normal (temporary failure).

Front, Rear Wheel Rotation Difference Abnormal Inspection (Service Code B25)

● Check the following and correct the faulty part.
Incorrect Tire Pressure
Tires not recommended for the motorcycle were installed (incorrect tire size).
Deformation of Wheel or Tire
Missing Teeth or Clogging with Foreign Matter of Sensor Rotor (see Wheel Rotation Sensor Rotor Inspection in the Brakes chapter)
★If the all parts corrected, go to next step.

● Perform the Pre-Diagnosis Inspection 1 and 2 (see Inquiries to Rider in the Brakes chapter).
★If this service code appears even if all checks are ended, replace the ABS hydraulic unit.
★If the service code does not appear, the ABS system normal (temporary failure).

ABS Motor Relay Inspection (Service Code B35)



● Check the ABS motor relay fuse (25 A) [A] (see Fuse Inspection in the Electrical System chapter).
★If the fuse is good, check the wiring continuity as follows.
○Disconnect:
Battery Positive Cable (see Battery Removal in the Electrical System chapter)
ABS Hydraulic Unit Connector (see ABS Hydraulic Unit Removal in the Brakes chapter)

ABS Service Codes

○Check the wiring continuity between the positive cable terminal [A] of the battery and R/W lead terminal [B] in the ABS hydraulic unit connector [C].
★If the wiring is open, replace or repair the harness (see ABS System Circuit in the Brakes chapter).
★If the wiring is good, go to next step.

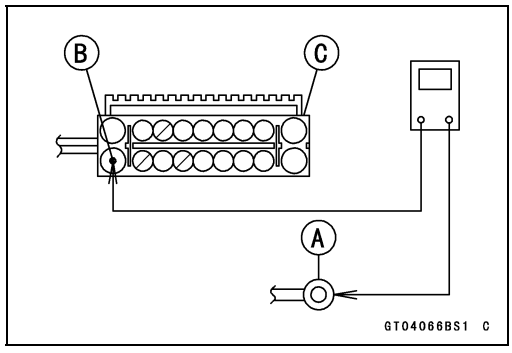

○The ABS motor relay is built in the ABS hydraulic unit. Therefore the relay cannot be checked directly.
● Perform the Pre-Diagnosis Inspection 1 and 2 (see Inquiries to Rider in the Brakes chapter).
★If this service code appears even if all checks are ended, replace the ABS hydraulic unit.
★If the service code does not appear, the ABS system normal (temporary failure).

Front Wheel Rotation Sensor Signal Abnormal (Service Code B42)

● Measure the air gap between the front wheel rotation sensor and sensor rotor.
Thickness Gauge [A]

Air Gap
Standard: 0.4 ~ 1.6 mm (0.02 ~ 0.06 in.)

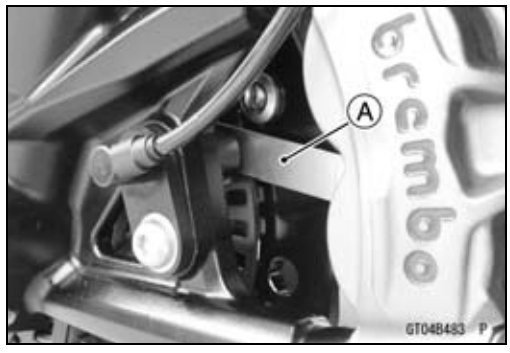

★If the measurement is not the standard, check each part for deformation and looseness and correct accordingly.
★If the measurement is the standard, go to next step.

● Check that there is iron or other magnetic deposits between the sensor and sensor rotor, and the sensor rotor slots for obstructions.
● Check the installation condition of the sensor for looseness.
● Check the sensor and sensor rotor tip for deformation or damage (e.g., chipped sensor rotor teeth).
★If the sensor and sensor rotor in bad condition, remove the any deposits. Install the proper part or replace faulty part.
★If the all items are good, go to next step.
● Perform the Pre-Diagnosis Inspection 1 and 2 (see Inquiries to Rider in the Brakes chapter).
★If this service code appears even if all checks are ended, replace the ABS hydraulic unit.
★If the service code does not appear, the ABS system normal (temporary failure).

ABS Service Codes

Front Wheel Rotation Sensor Wiring Inspection (Service Code B43)

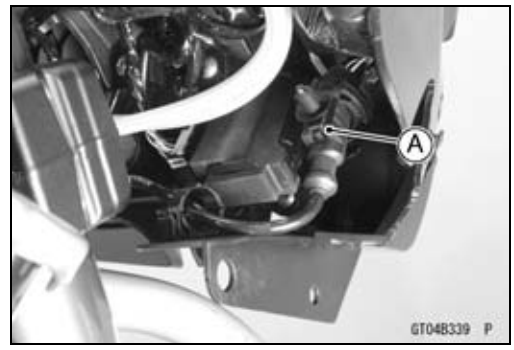

- Disconnect the front wheel rotation sensor lead connector [A] (see Front Wheel Rotation Sensor Removal in the Brakes chapter).

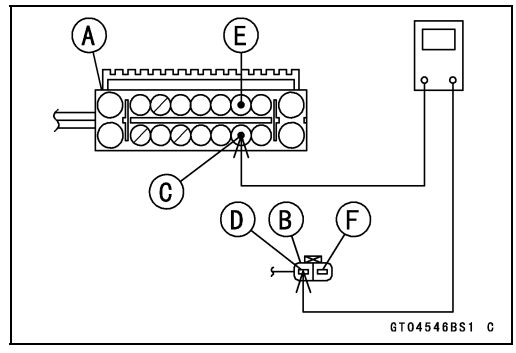

- Disconnect the ABS hydraulic unit connector (see ABS Hydraulic Unit Removal in the Brakes chapter).
- Check the wiring continuity between main harness connectors

Wiring Continuity Inspection
ABS Hydraulic Unit Connector [A] ←→ Front Wheel Rotation Sensor Connector [B]
ABS Hydraulic Unit Terminal 12 [C] ←→ Sensor Terminal [D]
ABS Hydraulic Unit Terminal 3 [E] ←→ Sensor Terminal [F]

★If the wiring is open, replace or repair the harness (see ABS System Circuit in the Brakes chapter).
★If the wiring is good, go to next step.

- Perform the Pre-Diagnosis Inspection 1 and 2 (see Inquiries to Rider in the Brakes chapter).

★If this service code appears even if all checks are ended, replace the front wheel rotation sensor (see Front Wheel Rotation Sensor Removal in the Brakes chapter).
- Still, when it is not good, replace the ABS hydraulic unit.

★If the service code does not appear, the ABS system normal (temporary failure).

Rear Wheel Rotation Sensor Signal Abnormal (Service Code B44)

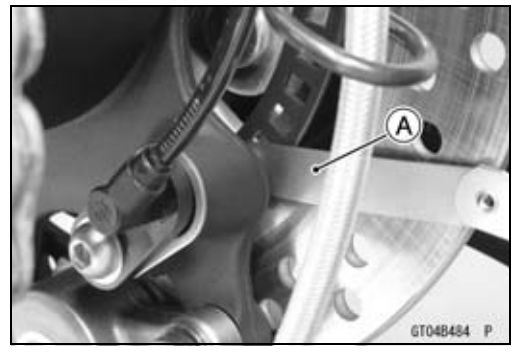

- Measure the air gap between the rear wheel rotation sensor and sensor rotor.
  Thickness Gauge [A]

Air Gap
Standard: 0.4 ~ 1.6 mm (0.02 ~ 0.06 in.)

★If the measurement is not the standard, adjust the air gap with the spacer.

Spacer Thickness	Part Number
0.5 mm (0.020 in.)	92026-0789
1.0 mm (0.039 in.) (STD)	92026-0790
1.5 mm (0.059 in.)	92026-0791

★If the air gap can not be adjusted by spacer, check each part for deformation and looseness and correct accordingly.
★If the measurement is the standard, go to next step.

ABS Service Codes

- Check that there is iron or other magnetic deposits between the sensor and sensor rotor, and the sensor rotor slots for obstructions.
- Check the installation condition of the sensor for looseness.
- Check the sensor and sensor rotor tip for deformation or damage (e.g., chipped sensor rotor teeth).

★If the sensor and sensor rotor in bad condition, remove the any deposits. Install the proper part or replace faulty part.

★If the all items are good, go to next step.

- Perform the Pre-Diagnosis Inspection 1 and 2 (see Inquiries to Rider in the Brakes chapter).

★If this service code appears even if all checks are ended, replace the ABS hydraulic unit.

★If the service code does not appear, the ABS system normal (temporary failure).

Rear Wheel Rotation Sensor Wiring Inspection (Service Code B45)

- Disconnect the rear wheel rotation sensor lead connector [A] (see Rear Wheel Rotation Sensor Removal in the Brakes chapter).

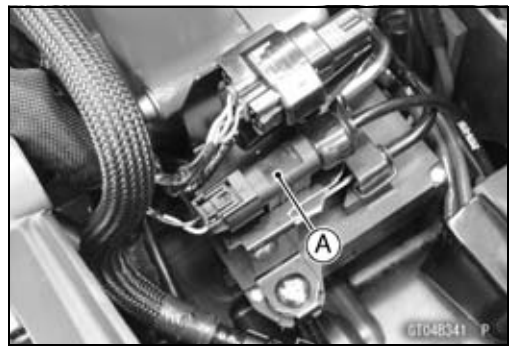

- Disconnect the ABS hydraulic unit connector (see ABS Hydraulic Unit Removal in the Brakes chapter).
- Check the wiring continuity between main harness connector.

Wiring Continuity Inspection

ABS Hydraulic Unit Connector [A] ←→ Rear Wheel Rotation Sensor Connector [B]

ABS Hydraulic Unit Terminal 14 [C] ←→ Sensor Terminal [D]

ABS Hydraulic Unit Terminal 13 [E] ←→ Sensor Terminal [F]

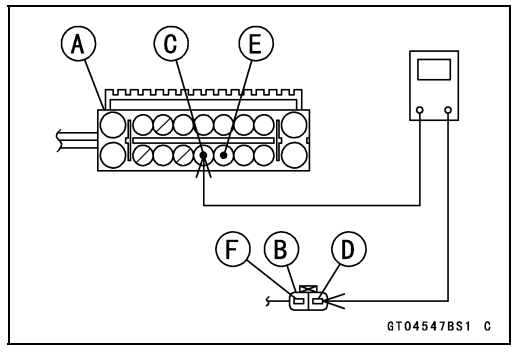

★If the wiring is open, replace or repair the harness (see ABS System Circuit in the Brakes chapter).

★If the wiring is good, go to next step.

- Perform the Pre-Diagnosis Inspection 1 and 2 (see Inquiries to Rider in the Brakes chapter).

★If this service code appears even if all checks are ended, replace the rear wheel rotation sensor (see Rear Wheel Rotation Sensor Removal in the Brakes chapter).

- Still, when it is not good, replace the ABS hydraulic unit.

★If the service code does not appear, the ABS system normal (temporary failure).

ABS Service Codes

Power Supply Voltage Inspection (Low-Voltage) (Service Code B52)

- Check the battery condition (see Charging Condition Inspection in the Electrical System chapter).

★If the battery is good condition, perform the Pre-Diagnosis Inspection 1 and 2 (see Inquiries to Rider in the Brakes chapter).

★If this service code appears even if all checks are ended, replace the ABS hydraulic unit.

★If the service code does not appear, the ABS system normal (temporary failure).

Power Supply Voltage Inspection (Over-Voltage) (Service Code B53)

- Check the charging voltage (see Charging Voltage Inspection in the Electrical System chapter).

★If the charging voltage is good, perform the Pre-Diagnosis Inspection 1 and 2 (see Inquiries to Rider in the Brakes chapter).

★If this service code appears even if all checks are ended, replace the ABS hydraulic unit.

★If the service code does not appear, the ABS system normal (temporary failure).

ECU Inspection (Service Code B55)

○This ECU is built in the ABS hydraulic unit. Therefore the ECU cannot be checked directly.

- Perform the Pre-Diagnosis Inspection 1 and 2 (see Inquiries to Rider in the Brakes chapter).

★If this service code appears even if all checks are ended, replace the ABS hydraulic unit.

★If the service code does not appear, the ABS system normal (temporary failure).

CAN Communication (Transmission)/CAN Bus OFF Monitor Inspection (Service Code B57)
CAN Communication (Reception) Monitor Inspection (Service Code B58)

- Remove:
  Seat Pad (see Seat Pad Removal in the Frame chapter)
  Pad [A] and Connector Cap
- Measure the CAN communication line resistance.
  Immobilizer (Equipped Models)/Kawasaki Diagnostic System Connector [B]
  GY/BL Terminal [C]
  LB Terminal [D]

CAN Communication Line Resistance
Standard: 30 ~ 70 Ω

★If the reading is out of the standard, go to Check 1.

★If the reading is the standard, go to Check 2.

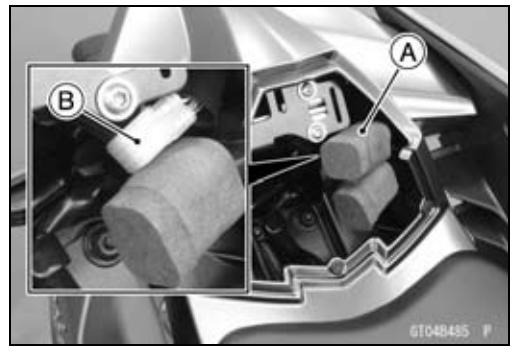

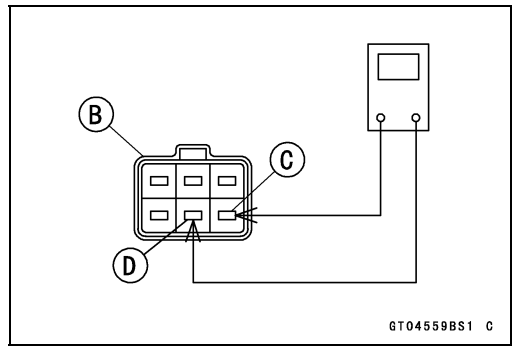

ABS Service Codes

Check 1

- Check the CAN communication line resistance of following parts.
  Meter Unit (see Meter Unit Inspection in the Electrical System chapter)
  ECU (see CAN Communication Line Resistance Inspection in the Fuel System (DFI) chapter)

Check 2

- Measure the resistance between the GY/BL [A] or LB [B] terminal and ground [C].
  Immobilizer (Equipped Models)/Kawasaki Diagnostic System Connector [D]

CAN Communication Line/Ground Resistance
Standard: 4 ~ 30 kΩ

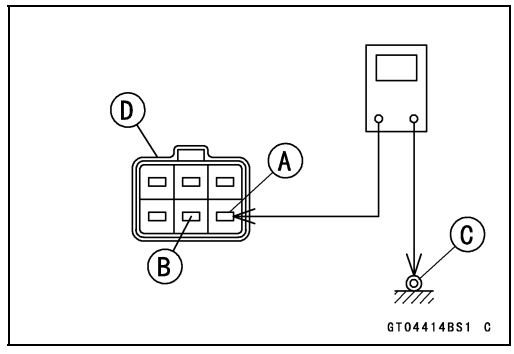

★If the reading is out of the standard, replace or repair the main harness.
★If the reading is the standard, go to next step.

- Perform the Pre-Diagnosis Inspection 1 and 2 (see Inquiries to Rider in the Brakes chapter).

★If this service code appears even if all checks are ended, replace the ABS hydraulic unit.
★If the service code does not appear, the ABS system normal (temporary failure).

ECU Communication Line Inspection (Service Code B62)

- Check the wiring continuity between the main harness connectors.
- Disconnect:
  ECU Connector (see ECU Removal in the Fuel System (DFI) chapter)
  ABS Hydraulic Unit Connector (see ABS Hydraulic Unit Removal in the Brakes chapter)

Wiring Continuity Inspection
ECU Connector [A] ←→ ABS Hydraulic Unit Connector [B]
ECU Terminal 60 [C] ←→ ABS Hydraulic Unit Terminal 11 [D]
ECU Terminal 61 [E] ←→ ABS Hydraulic Unit Terminal 2 [F]

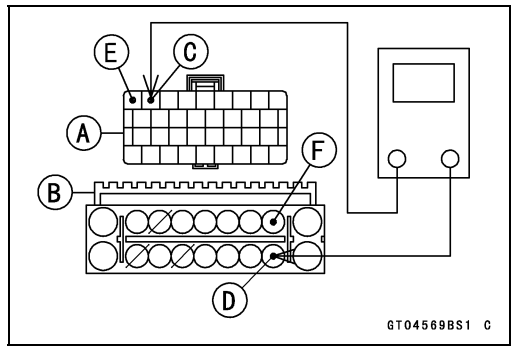

★If the wiring is open, replace or repair the harness (see ABS System Circuit in the Brakes chapter).
★If the wiring is good, check the ECU for its ground and power supply (see ECU Power Supply Inspection in the Fuel System (DFI) chapter).
★If the ground and power supply are good, go to next step.

- Perform the Pre-Diagnosis Inspection 1 and 2 (see Inquiries to Rider in the Brakes chapter).

★If this service code appears even if all checks are ended, replace the ABS hydraulic unit.
★If the service code does not appear, the ABS system normal (temporary failure).

ABS Service Codes

IMU Communication Line Inspection (Service Code B63)

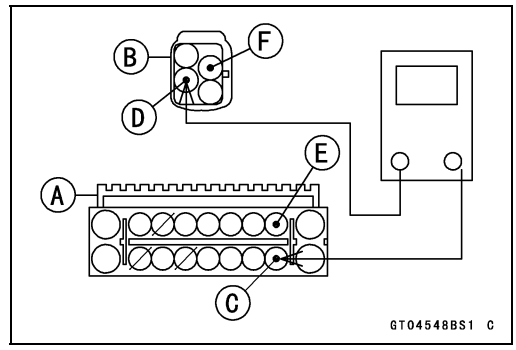

- Check the wiring continuity between the main harness connectors.
- Disconnect:
  IMU Connector (see IMU Removal)
  ABS Hydraulic Unit Connector (see ABS Hydraulic Unit Removal in the Brakes chapter)

Wiring Continuity Inspection

ABS Hydraulic Unit Connector [A] ←→ IMU Connector [B]

ABS Hydraulic Unit Terminal 11 [C] ←→ IMU Terminal [D]

ABS Hydraulic Unit Terminal 2 [E] ←→ IMU Terminal [F]

★If the wiring is open, replace or repair the harness (see ABS System Circuit in the Brakes chapter).
★If the wiring is good, go to next step.

- Perform the Pre-Diagnosis Inspection 1 and 2 (see Inquiries to Rider in the Brakes chapter).

★If this service code appears even if all checks are ended, replace the ABS hydraulic unit.
★If the service code does not appear, the ABS system normal (temporary failure).

Output Fluid Pressure Sensor (Front Brake) Wiring Inspection (Service Code B83)

○The output fluid pressure sensor is built in the ABS hydraulic unit. Therefore the sensor cannot be checked directly.

- Perform the Pre-Diagnosis Inspection 1 and 2 (see Inquiries to Rider in the Brakes chapter).

★If this service code appears even if all checks are ended, replace the ABS hydraulic unit.

Output Fluid Pressure Sensor (Front Brake) Offset Abnormal (Service Code B84)

○The output fluid pressure sensor is built in the ABS hydraulic unit. Therefore the sensor cannot be checked directly.

- Perform the Pre-Diagnosis Inspection 1 and 2 (see Inquiries to Rider in the Brakes chapter).

★If this service code appears even if all checks are ended, replace the ABS hydraulic unit.
★If the service code does not appear, the ABS system normal (temporary failure).

ABS Service Codes

Fluid Pressure Sensor Supply Voltage Inspection (Service Code B89)

○The fluid pressure sensors are built in the ABS hydraulic unit. Therefore the voltage cannot be checked directly.

● Perform the Pre-Diagnosis Inspection 1 and 2 (see Inquiries to Rider in the Brakes chapter).

★If this service code appears even if all checks are ended, replace the ABS hydraulic unit.

★If the service code does not appear, the ABS system normal (temporary failure).

IMU Inspection (Service Code B94)

● Check the IMU power supply voltage (see IMU Power Supply Inspection).

★If the IMU is good, perform the Pre-Diagnosis Inspection 1 and 2 (see Inquiries to Rider in the Brakes chapter).

★If this service code appears even if all checks are ended, replace the ABS hydraulic unit.

★If the service code does not appear, the ABS system normal (temporary failure).

Appendix

Table of Contents

Cable, Wire, and Hose Routing 18-2
Troubleshooting Guide 18-44

Cable, Wire, and Hose Routing

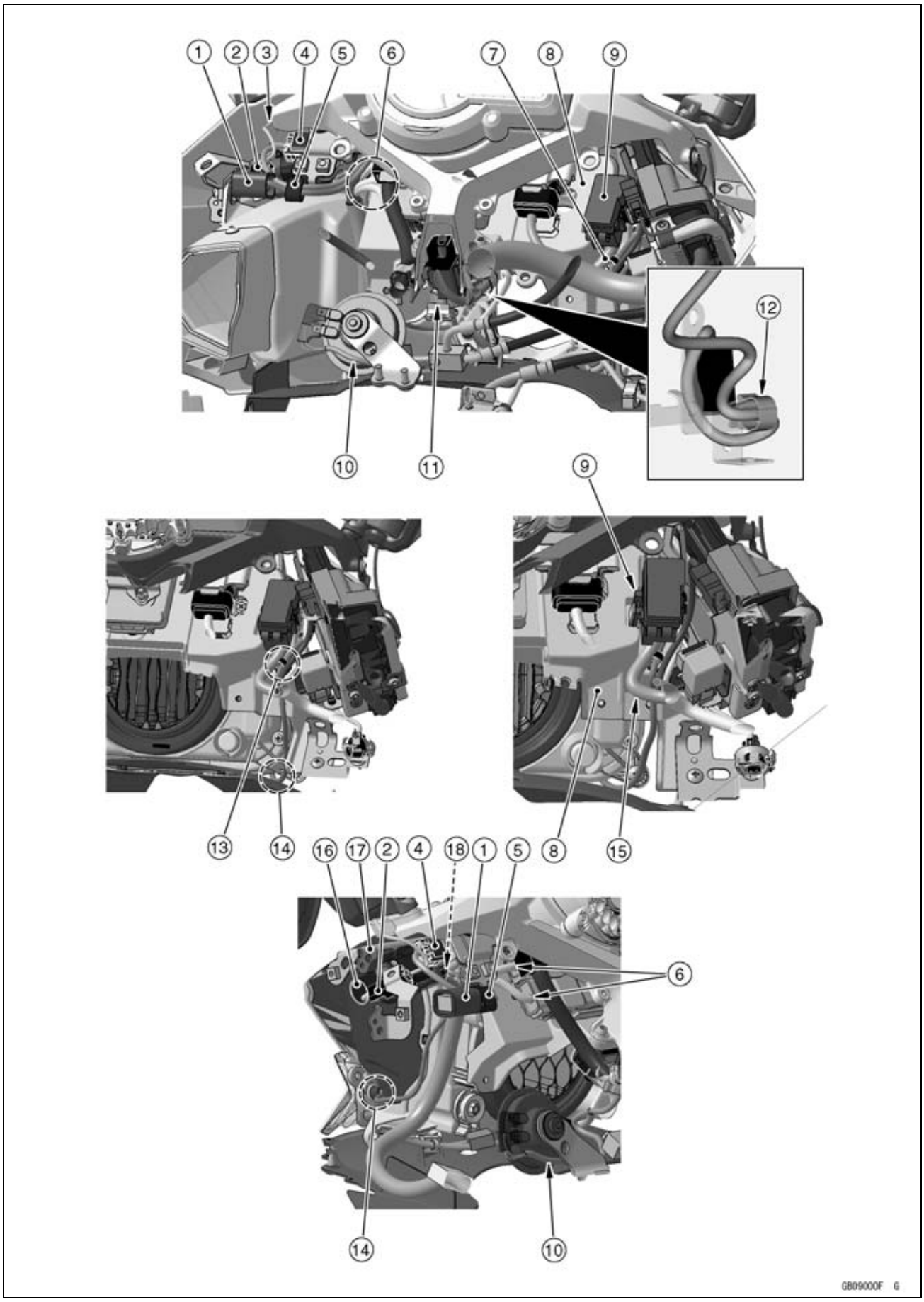

Cable, Wire, and Hose Routing

1. CAN Output Connector
2. Front Left Turn Signal Light Lead Connector
3. Run the front left turn signal light lead in back of the IMU lead.
4. IMU Connector
5. Clamp (Hold the CAN output connector lead and the IMU lead.)
6. Move the relay box leads forward to hide it.
7. Fuse Box Lead (Run it in back of the right city light lead.)
8. Headlight Cover
9. Fuse Box (Insert the tab of the fuse box into the headlight cover.)
10. Run the horn lead in back of the horn.
11. Hold the right switch housing lead (main harness side) with the lower clamp.
12. Hold the right switch housing lead (switch housing side) with the right clamp as shown.
13. Clamp (Hold the right city light lead. Install it to the headlight cover.)
14. Run the city light lead at this portion.
15. Run the fuse box lead to inside of the headlight cover.
16. Position the dust cover to the space between the bracket and the front left turn signal light lead connector. Face the narrow side of the boot to the left.
17. Bracket
18. Clamp (Hold the left city light lead. Insert it to the headlight cover.)

Cable, Wire, and Hose Routing

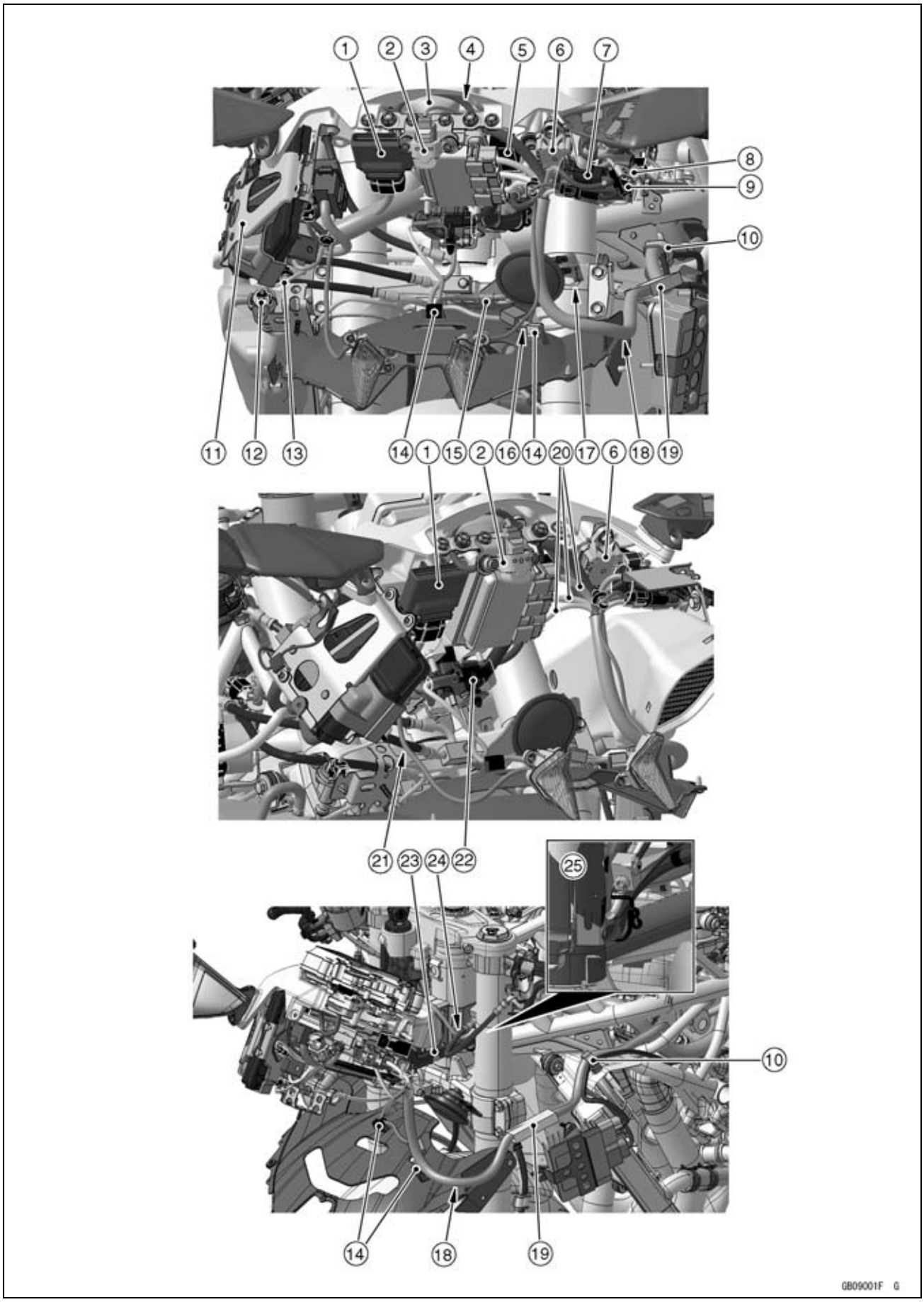

Cable, Wire, and Hose Routing

1. ESD ECU
2. Vehicle-down Sensor
3. Meter Unit Connector
4. Run the meter unit lead above the meter unit connector.
5. Left Switch Housing Lead Connector
6. IMU
7. Dust Cover (Cover the headlight lead connector and the left city light lead connector.)
8. Bracket
9. Front Left Turn Signal Light Lead Connector (Insert its projection to the bracket.)
10. Clamp (Hold the taped portion of main harness and the alternator lead.)
11. ECU Bracket
12. Front Wheel Rotation Sensor Lead Connector
13. Clamp (Hold the front wheel rotation sensor lead. Install it to the ECU bracket.)
14. Clamps (Install them to the ribs of the inner fairing.)
15. Clamp (Hold the horn lead.)
16. Run the left city light lead in front of the right switch housing lead.
17. Connect the horn lead terminals so that the leads face downward.
18. Run the main harness to the outside of the rib of the inner fairing.
19. Protector of the Main Harness (Position it under the intake duct.)
20. Relay Box Leads
21. Run the right city light lead in front of the front wheel rotation sensor lead.
22. Dust Cover (Cover the starter lockout switch lead. Hold it with the clamp, and install the clamp to the bracket.)
23. Clamp (Hold the starter lockout switch lead and the left switch housing lead.)
24. Run the clutch hose above the ignition switch lead. Run the clutch hose to the inside of the ignition switch lead.
25. Run the left switch housing lead, starter lockout switch lead and ignition switch lead into the clamp.
    Run the left switch housing lead under the other leads.
    Run the starter lockout switch above the left switch housing lead.
    Run the ignition switch lead above the left switch housing lead, and run it to the inside of the starter lockout switch lead.

Cable, Wire, and Hose Routing

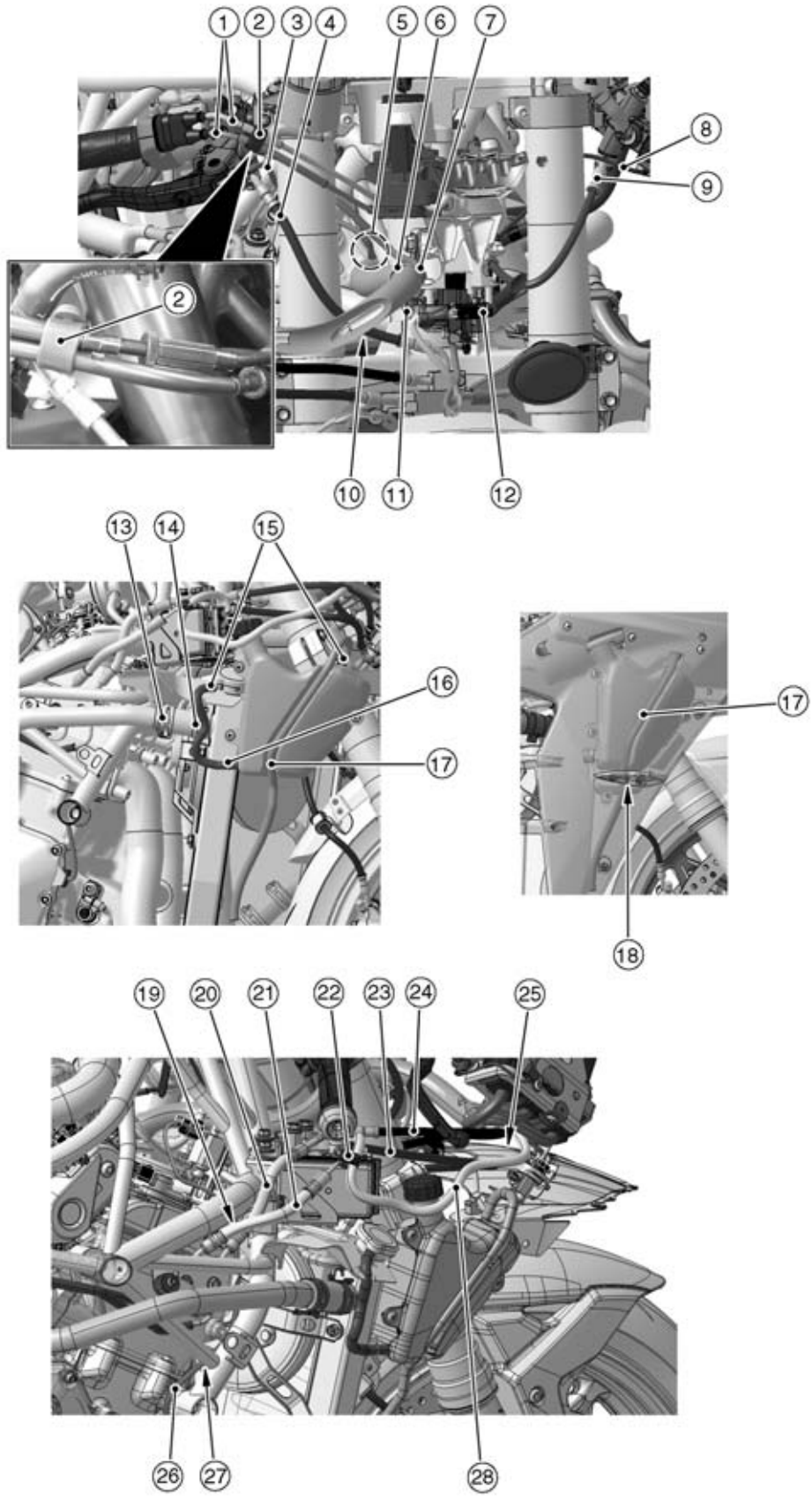

Cable, Wire, and Hose Routing

1. Throttle Cables
2. Clamp (Hold the throttle cables. Face the projection of the clamp backward. Align the adjuster edge and clamp edge as shown.)
3. Front Brake Light Switch Lead (Run it above the brake hose.)
4. Brake Hose
5. Run the front brake light switch lead to the inside of the frame at this portion. Run it in front of the ESD lead.
6. Band (Hold the main harness. Install it to the hole of the meter bracket.)
7. Right Switch Housing Lead (Run it above the band.)
8. Starter Lockout Switch Lead (Run it above the clutch hose.)
9. Clutch Hose
10. Run the main harness in front of the brake hose.
11. Clamp (Hold the right switch housing lead.)
12. Starter Lockout Switch Lead Connector
13. Clamp (Face its knob downward.)
14. Clamp (Face its knob upward.)
15. Clamps (Face its knob outward.)
16. Clamp (Face its knob upward.)
17. Reserve Tank Overflow Hose (Install it along the groove of the tank. Run it to the hole of the middle fairing.)
18. Hole of Middle Fairing
19. Run the brake hose (to rear caliper) to the outside of the brake hose (to rear master cylinder).
20. Brake Hose (To Rear Master Cylinder)
21. Brake Hose (To Rear Caliper)
22. Clamp (Hold the brake pipe and the ABS hydraulic unit lead.)
23. Brake Hose (To Front Calipers)
24. Brake Hose (To Front Master Cylinder)
25. Do not cross the brake hoses.
26. Crankshaft Sensor Lead
27. Run the crankshaft sensor lead to the inside of the frame.
28. ABS Hydraulic Unit Lead (Run it to the outside of the reserve tank. Run it in front of the brake hoses.)

Cable, Wire, and Hose Routing

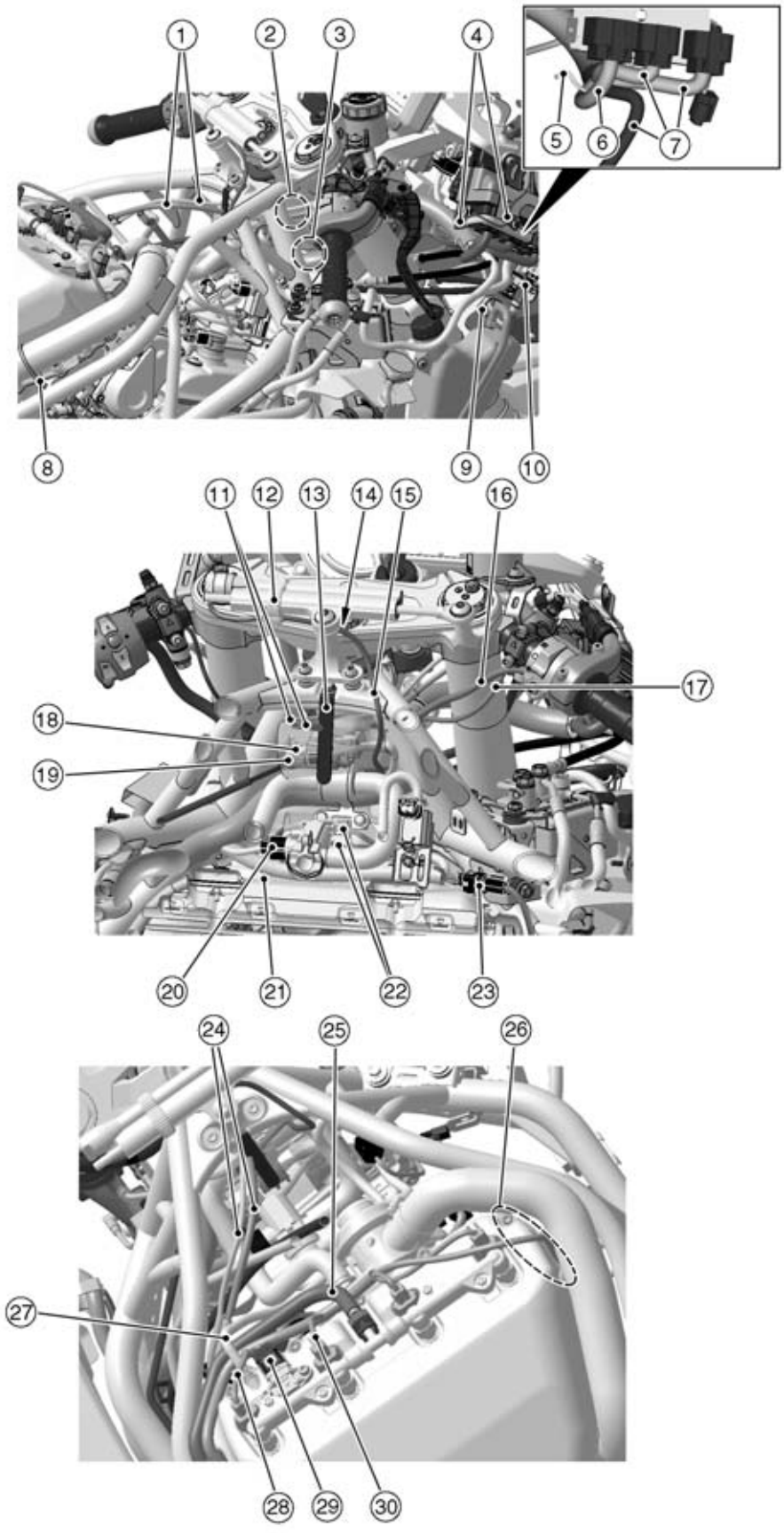

Cable, Wire, and Hose Routing

1. Throttle Cables
2. Run the throttle cables to the outside of the frame at this portion.
3. Run the main harness and the front brake light switch lead to the outside of the frame at this portion.
4. Clamps (Hold the front right turn signal light lead.)
5. Clamp
6. ECU Lead (Rear) (Run it to the outside of the clamp.)
7. ECU Leads (Middle, Front) and ABS Hydraulic Unit Lead (Run them to the inside of the clamp.)
8. Band (Hold the blow-off valve hose. Install it to the hole of the air intake chamber.)
9. Clamp (Hold the front wheel rotation sensor lead. Install it to the inner fairing.)
10. Clamp (Hold the front wheel rotation sensor lead connector. Install it to the bracket on the headlight cover.)
11. Throttle Cables (Run them to the left side of the clamp.)
12. Clamp (Hold the ESD lead.)
13. Clamp (Hold the dust cover of the ignition switch lead connector.)
14. Run the ESD lead in front of the steering damper bracket.
15. ESD Lead (Run it to the outside of the frame at this portion.)
16. Right Switch Housing Lead
17. Front Brake Light Switch Lead (Run it above the right switch housing lead.)
18. Ignition Switch Lead (Run it above the front brake light switch lead.)
19. Front Brake Light Switch Lead (Run it in front of the dust cover of the ignition switch lead connector. Run it under the throttle cables.)
20. Air Switching Valve Lead Connector
21. Camshaft Position Sensor Lead (Run it under the main harness.)
22. Radiator Fan Lead Connectors
23. Crankshaft Sensor Lead Connector (Install it to the ABS hydraulic unit bracket.)
24. Throttle Cables (Run them above the fuel tank drain hose.)
25. Secondary Fuel Hose (Run it above the main harness.)
26. Run the throttle position sensor lead between the air intake chamber bolts.
27. Purge Valve Hose (Run it above the secondary fuel hose and main harness.)
28. Secondary Fuel Injector Lead #1 (Run it to the right side of the purge valve hose.)
29. Air Intake Chamber Pressure/Temperature Sensor Lead
30. Secondary Fuel Injector Lead #2 (Do not bend it more than 200 degrees.)

Cable, Wire, and Hose Routing

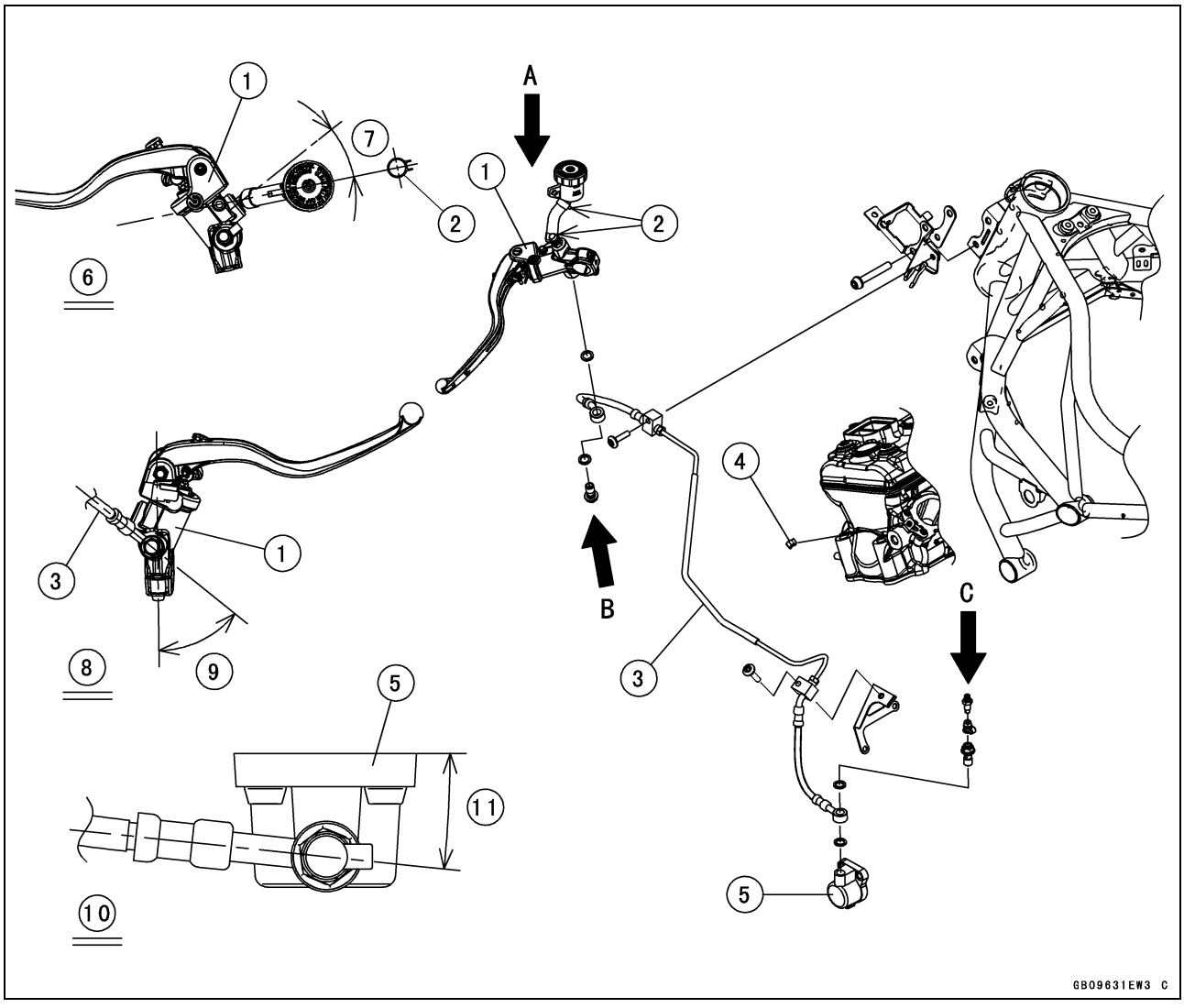

1. Clutch Master Cylinder
2. Clamps (Hold the clutch hose as shown.)
3. Clutch Hose
4. Clamp (Hold the clutch hose.)
5. Clutch Slave Cylinder
6. Viewed from A
7. 26°
8. Viewed from B
9. About 50.5°
10. Viewed from C
11. About 6°

Cable, Wire, and Hose Routing

Other than US and CA Models

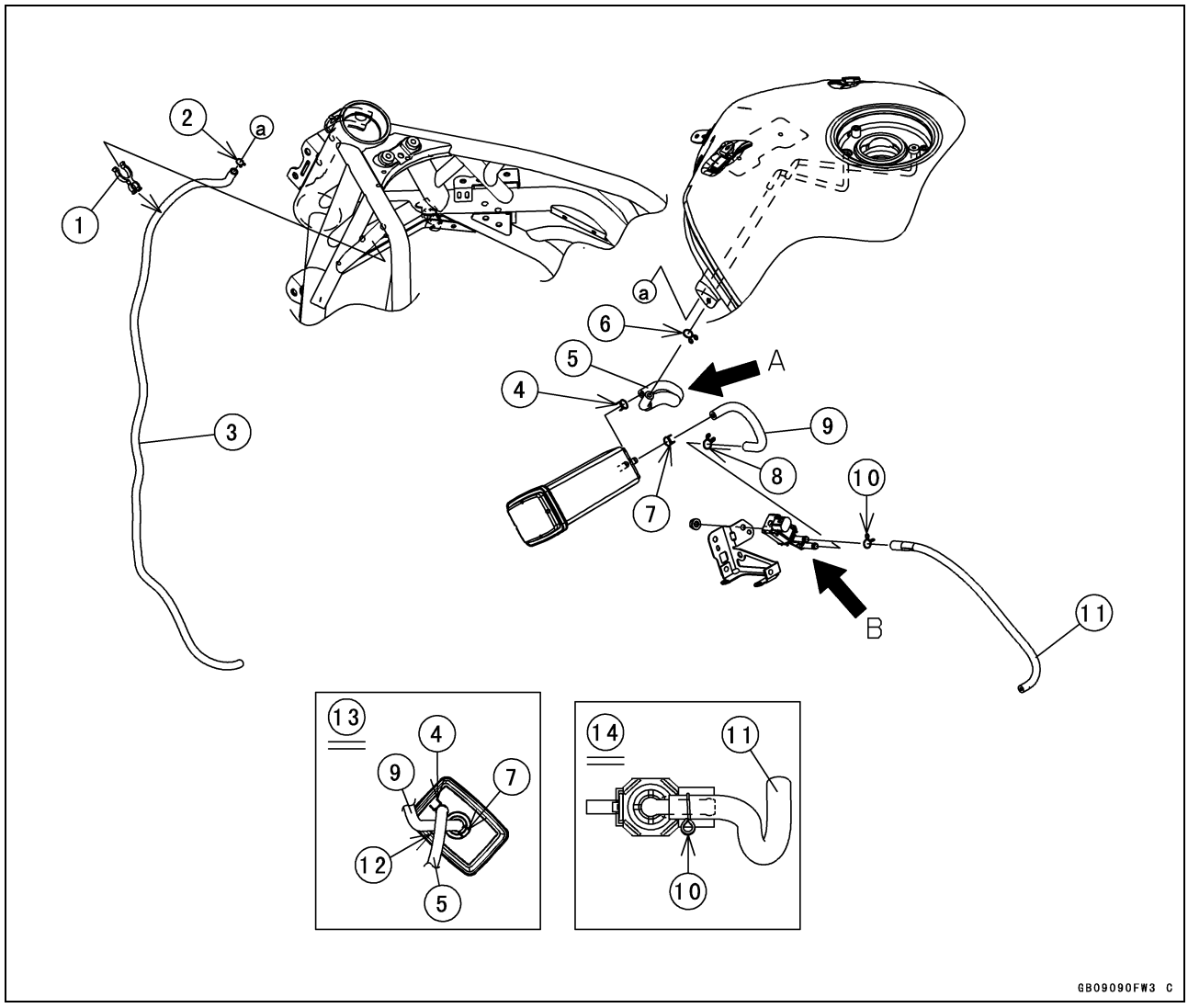

1. Clamp (Hold the drain hose to the frame in this position.)
2. Clamp (Hold the drain hose so that the clamp faces to rear side.)
3. Drain Hose
4. Clamp (Hold the breather hose (to fuel tank) as shown.)
5. Install the breather hose (to fuel tank) so that the paint mark faces to fuel tank side.
6. Clamp (Hold the breather hose (to fuel tank) so that the clamp faces to rear side.)
7. Clamp (Hold the breather hose (to purge valve) as shown.)
8. Clamp (Hold the breather hose (to purge valve) so that the clamp faces to right side.)
9. Install the breather hose (to purge valve) so that the paint mark faces to canister.
10. Clamp (Hold the purge valve hose (to throttle body assy) so that the clamp faces to right side.)
11. Install the purge valve hose (to throttle body assy) so that the paint mark faces to purge valve.
12. Run the breather hose (to purge valve) to outside of the breather hose (to fuel tank).
13. Viewed from A
14. Viewed from B

Cable, Wire, and Hose Routing

Other than US and CA Models

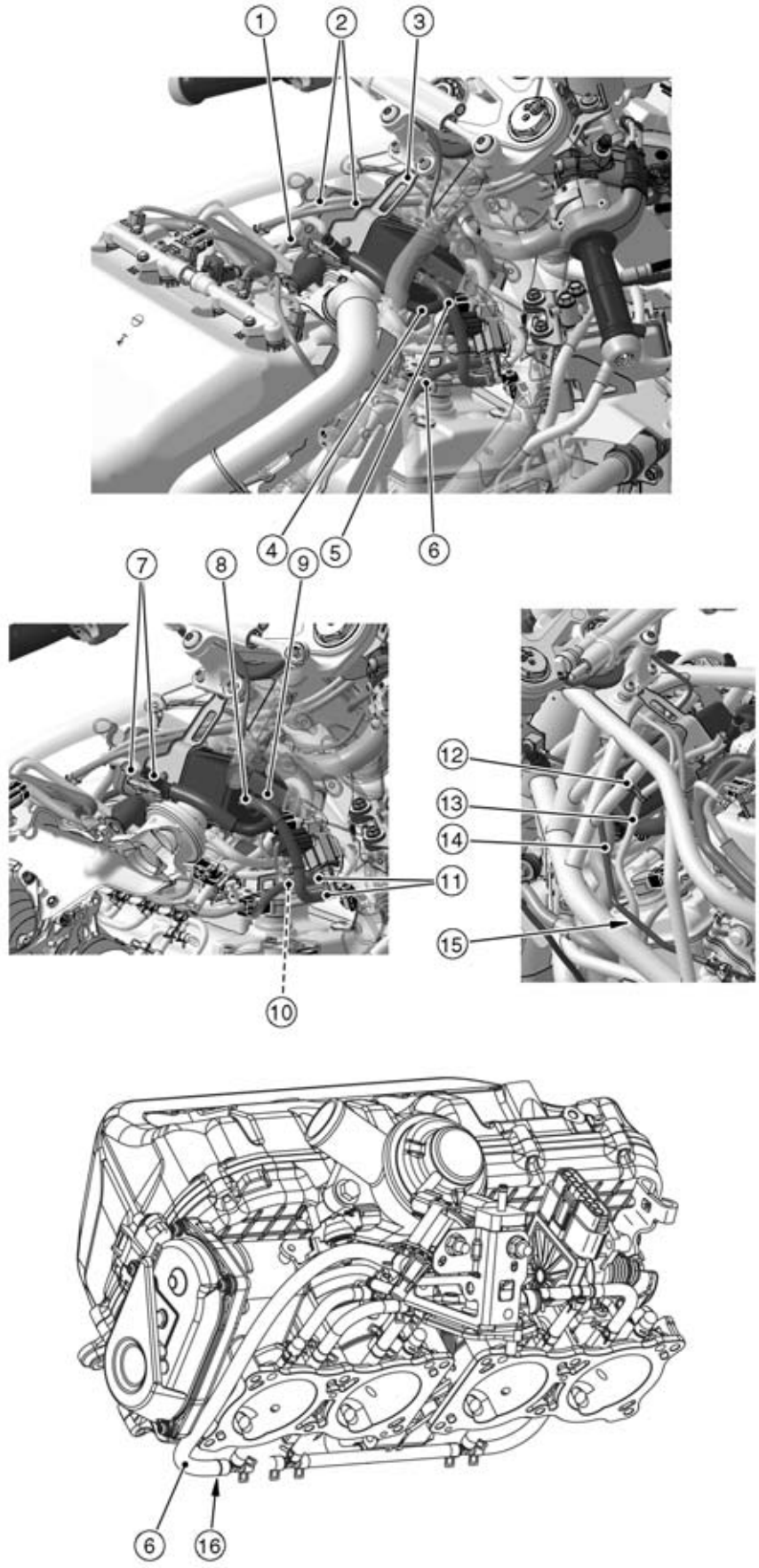

Cable, Wire, and Hose Routing

1. Fuel Tank Drain Hose (Run it in back of the canister.)
2. Throttle Cables (Run them above the fuel tank drain hose and canister. Run them to the left side of the canister bracket.)
3. Canister Bracket
4. Breather Hose (Canister - Fuel Tank) (Run it under the breather hose (purge valve - canister).)
5. Breather Hose (Purge Valve - Canister)
6. Breather Hose (Throttle Body Assy - Purge Valve) (Run it under the breather hose (purge valve - canister). Connect the green paint side of the hose to the purge valve.)
7. Clamps (Face the clamp knob backward.)
8. Clamp (Face the clamp knob backward.)
9. Clamp (Face the clamp knob forward.)
10. Clamp (Hold the purge valve lead. Install it to the purge valve bracket.)
11. Clamps (Face the clamp knob to the outside of the vehicle.)
12. Clamp (Hold the fuel tank drain hose. Install it to the main frame.)
13. Fuel Tank Drain Hose
14. Clutch Pipe
15. Run the fuel tank drain hose to the inside of the clutch pipe.
16. Clamp (Face the clamp knob backward.)

Cable, Wire, and Hose Routing

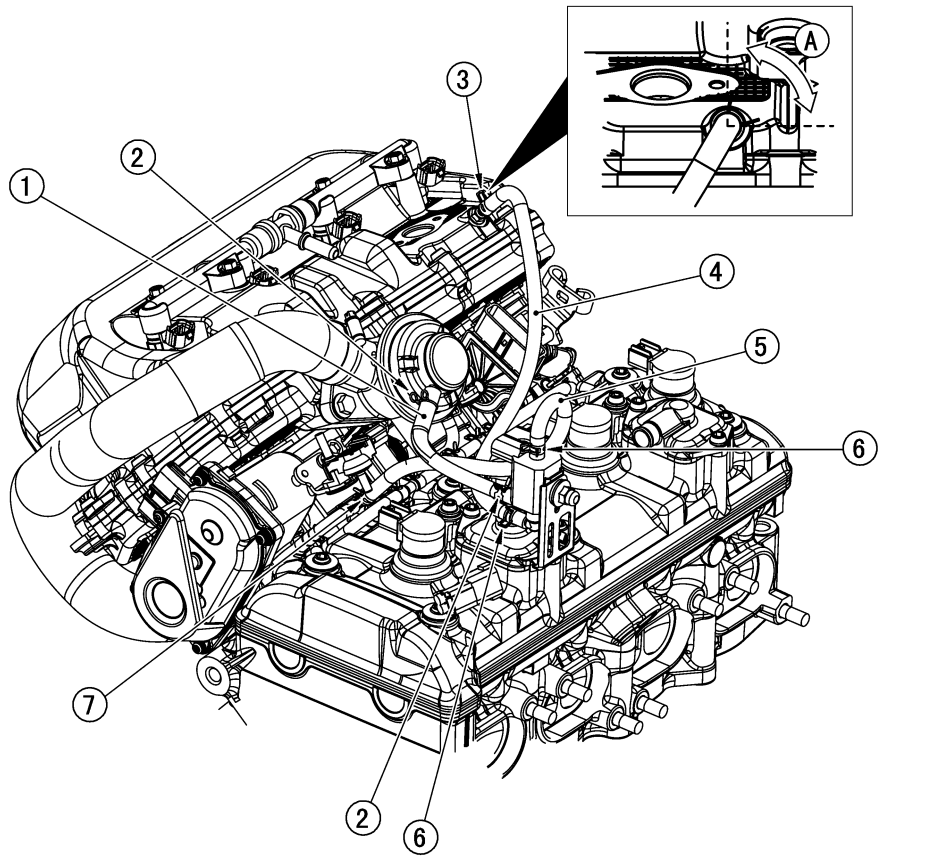

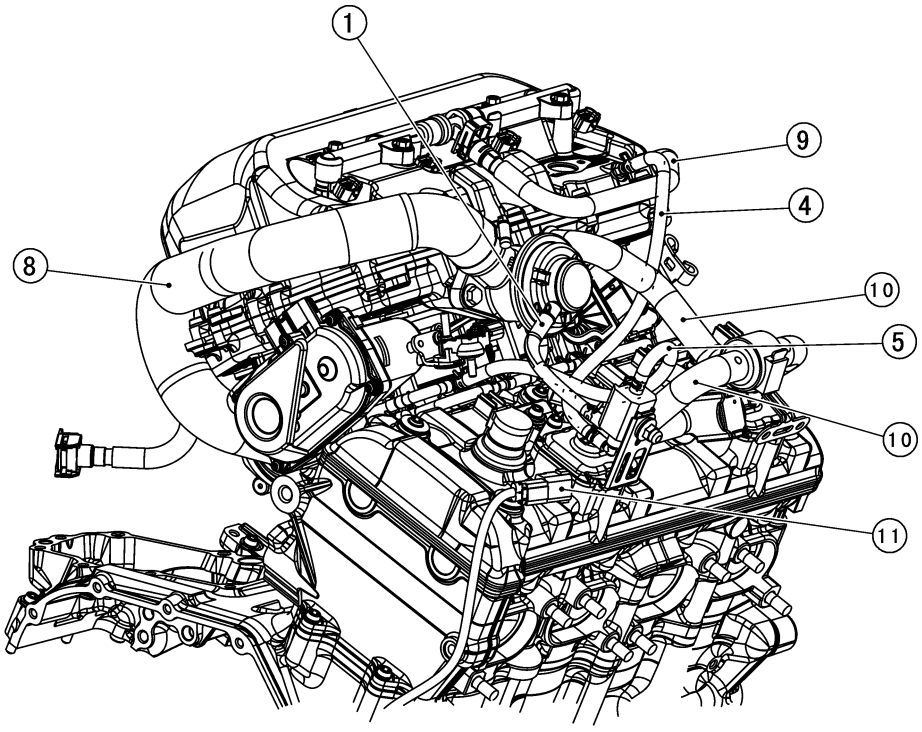

GB09005F S

Cable, Wire, and Hose Routing

1. Purge Valve Hose (Purge Valve - Blow-off Valve) (Connect the white paint side of the hose to the purge valve.)
2. Clamp (Face its knob upward.)
3. Clamp (Face its knob to between the specified range [A].)
4. Purge Valve Hose (Air Intake Chamber - Purge Valve) (Connect the white paint side of the hose to the air intake chamber. Face the white paint to the right side of the vehicle.)
5. Purge Valve Hose (Purge Valve - Throttle Body Assy) (Connect the white paint side of the hose to the throttle body assy. Face the white paint backward.)
6. Clamp (Face its knob to the right side of the vehicle.)
7. Clamp (Face its knob backward.)
8. Blow-off Valve Hose
9. Secondary Fuel Hose
10. Air Switching Valve Hoses
11. Crankshaft Sensor Lead

Cable, Wire, and Hose Routing

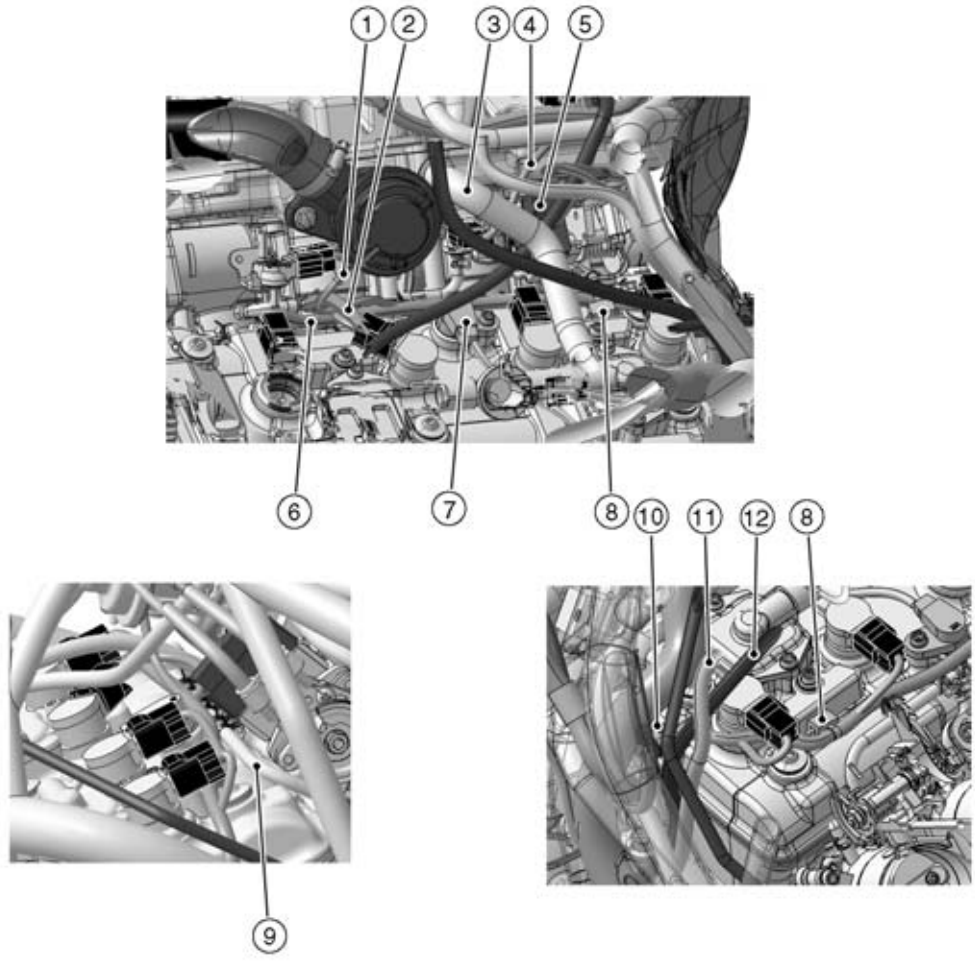

1. Atmospheric Pressure Sensor Lead (Run it under the purge valve hose.)
2. Purge Valve Hose (Purge Valve - Throttle Body Assy)
3. Air Switching Valve Hose
4. Intake Air Pressure Sensor Lead (Run it in back of the air switching valve hose.)
5. Accelerator Position Sensor Lead Connector
6. Stick Coil #4 Lead (Run it in front of the vacuum hose.)
7. Camshaft Position Sensor
8. Clamp (Hold the stick coil lead. Install it to the cylinder head cover.)
9. Vacuum Hose (Take care not to pinch it by the accelerator sensor lead and the stick coil lead.)
10. Clamp (Hold the stick coil lead. Install it to the main frame.)
11. Fuel Tank Drain Hose (Run it to the outside of the stick coil lead.)
12. Fuel Tank Breather Hose (US and CA Models) (Run it to the outside of the stick coil lead.)

Cable, Wire, and Hose Routing

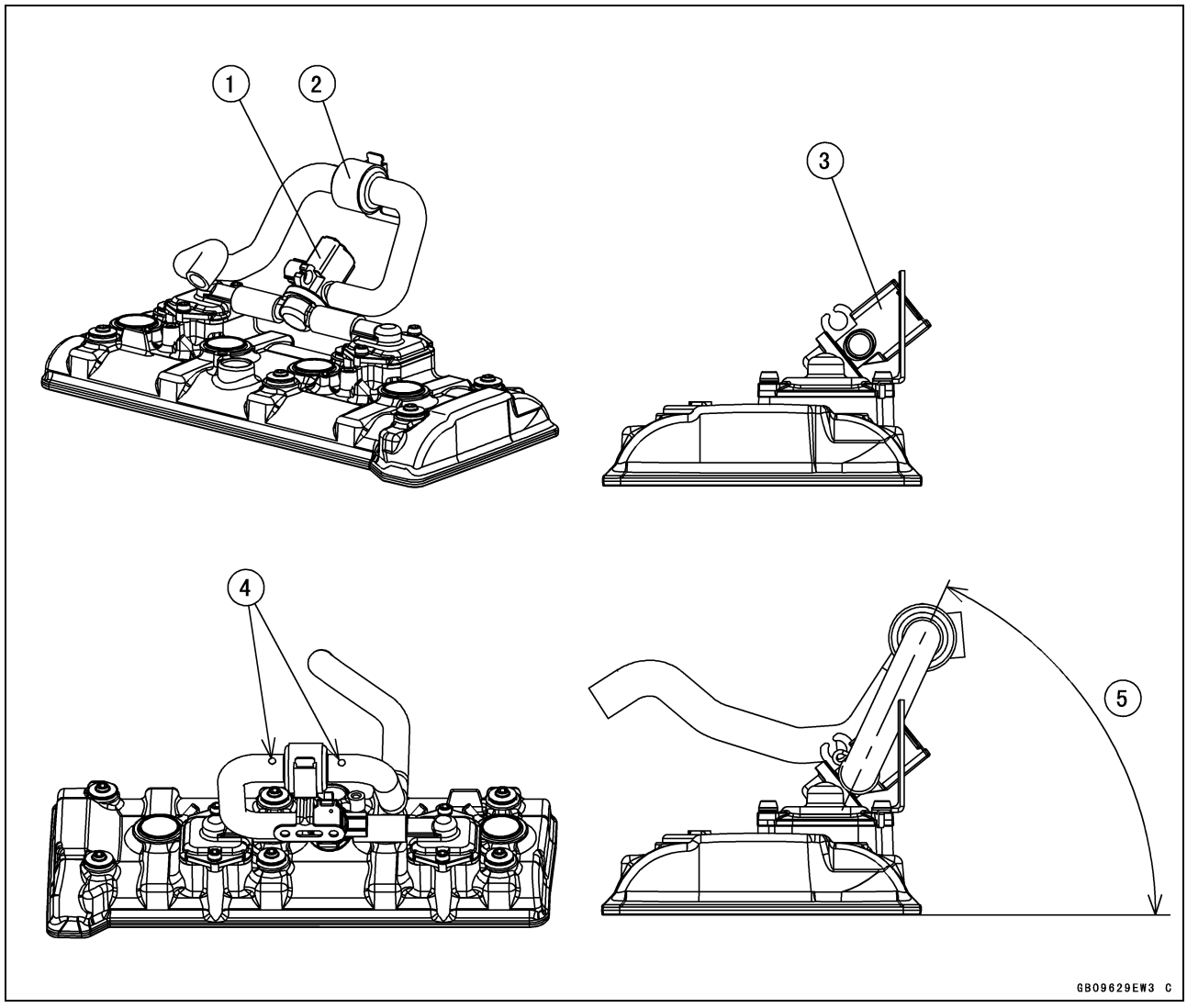

1. Air Switching Valve
2. Air Switching Valve Filter
3. Install the air switching valve as shown.
4. Align the paint marks of the air switching valve hoses.
5. About 60°

Cable, Wire, and Hose Routing

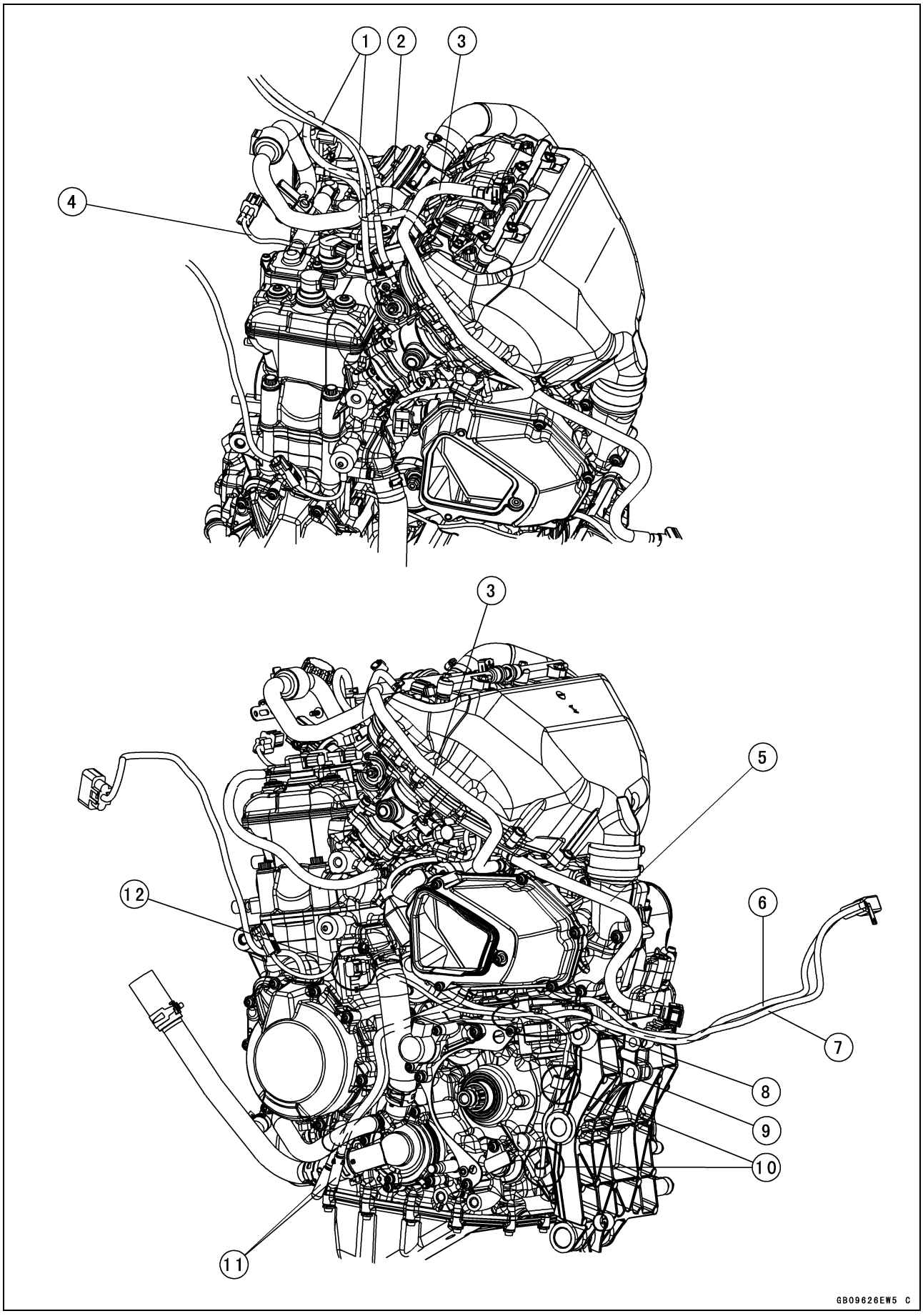

Cable, Wire, and Hose Routing

1. Throttle Cables
2. Purge Valve Hose
3. Secondary Fuel Hose
4. Camshaft Position Sensor Lead
5. Primary Fuel Hose
6. Battery Negative (–) Cable (Engine Ground Lead)
7. Starter Motor Cable
8. Run the starter motor cable to inside of the other leads.
9. Gear Position Sensor Lead
10. Clamps (Hold the gear position sensor lead.)
11. Air Cleaner Housing Drain Hoses
12. Hold the gear position sensor lead connector to the upper side of the bracket.

Cable, Wire, and Hose Routing

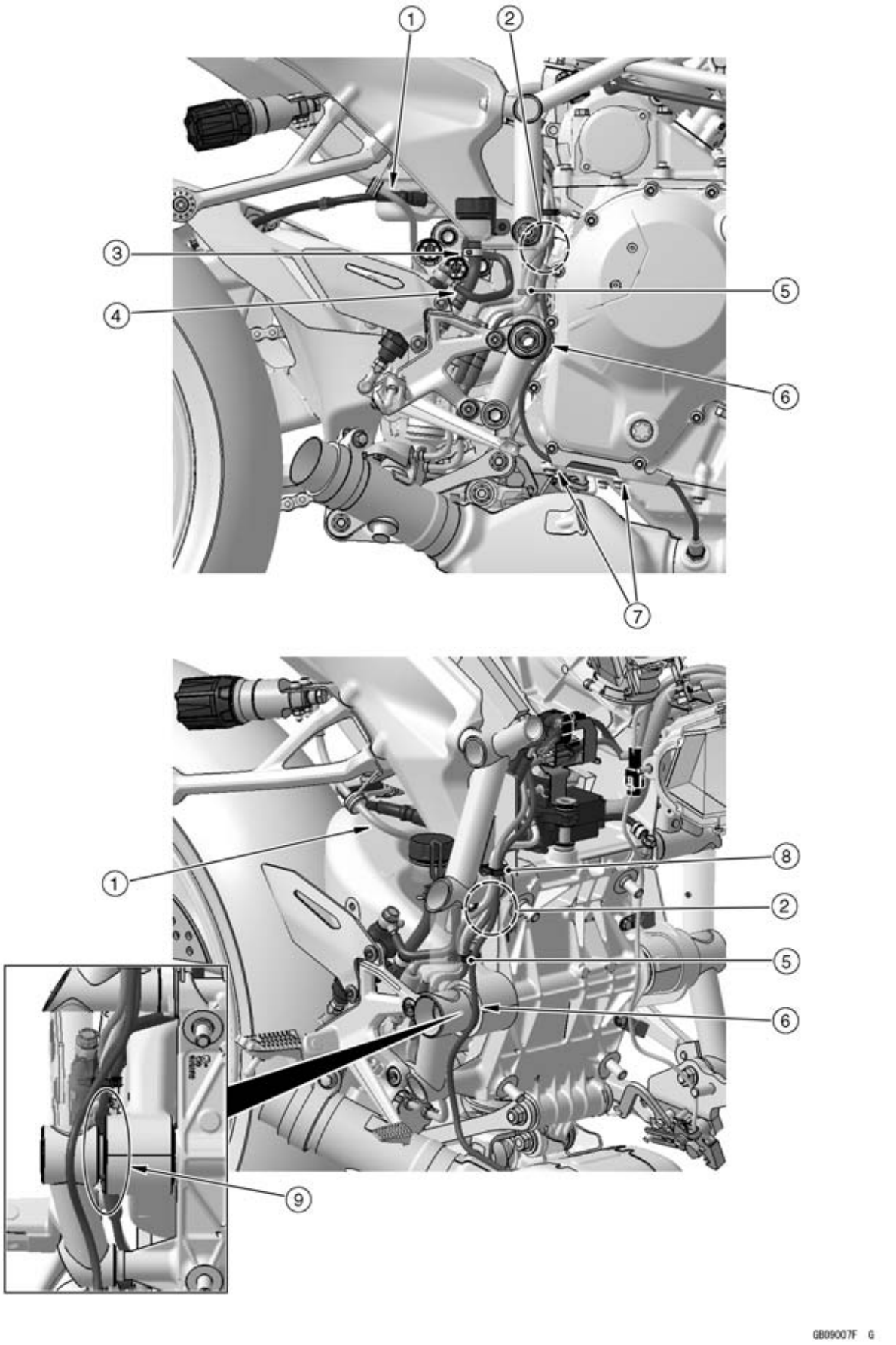

Cable, Wire, and Hose Routing

1. Run the preload adjuster cable under the brake hose.
2. Run the rear brake light switch lead to the outside of the exhaust butterfly valve cables.
3. Run the brake pipe to the left side of the reservoir tank hose.
4. Run the brake pipe to the right side of the reservoir tank hose.
5. Clamp (Hold the exhaust butterfly valve cables and rear brake light switch lead. Face the locking portion of the clamp backward.)
6. Run the oxygen sensor lead to the front side of the swingarm pivot.
7. Hold the oxygen sensor lead to the bracket.
8. Clamp (Hold the exhaust butterfly valve cables, rear brake light switch lead and oxygen sensor lead. Run the oxygen sensor lead to the inside of the exhaust butterfly valve cables. Face the locking portion of the clamp to the outside of the vehicle.)
9. Do not run the oxygen sensor lead to this groove.

Cable, Wire, and Hose Routing

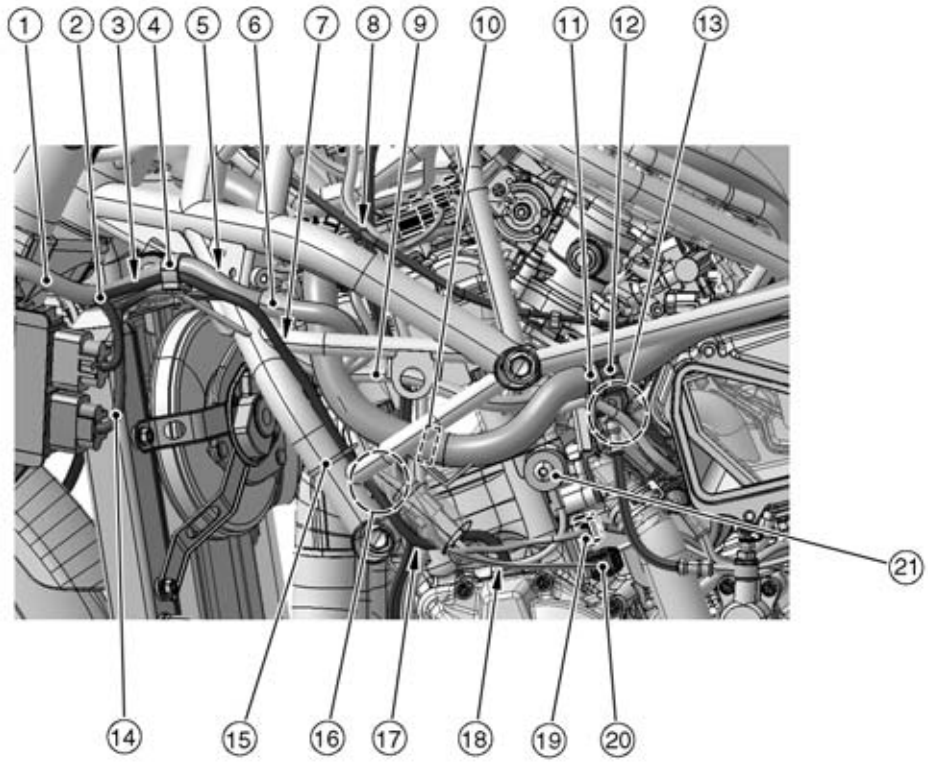

GB09008F G

Cable, Wire, and Hose Routing

1. Main Harness
2. Alternator Lead
3. Run the regulator/rectifier lead under the main harness, and run it to the inside of the clamp.
4. Clamp (Hold the alternator lead and the main harness. Run the alternator lead under the main harness.)
5. Run the main harness to the outside of the main frame.
6. Pad (Install it at the base of the regulator/rectifier lead.)
7. Run the alternator lead to the outside of the main frame.
8. Run the clutch pipe to the outside of the fuel tank breather hose (US and CA models) and the fuel tank drain hose.
9. Air Bleeder Hose (Run it to the inside of the main harness, and run it to the outside of the fuel tank breather hose (US and CA models) and the fuel tank drain hose.)
10. Tape (Align it with the main frame in this position.)
11. Install the band in front of the clamp (Position it within 10mm of the clamp.). Hold the main harness and the branch harness (for engine subharness) with the band. Run the branch harness under the main harness.
12. Clamp (Hold the main harness. Install it to the main frame.)
13. Run the branch harness (for engine subharness) to the outside of the clutch hose. Position the engine subharness connector to the inside of the clutch pipe fitting.)
14. Regulator/Rectifier Lead
15. Band (Hold the alternator lead. Install it to the main frame.)
16. Run the gear position sensor lead, quick shifter sensor lead and oil pressure switch lead to the inside of the main frame.
17. Run the fuel tank breather hose (US and CA models) and the fuel tank drain hose to the inside of the any leads.
18. Run the alternator lead to the inside of other leads.
19. Gear Position Sensor Connector
20. Quick Shifter Sensor Connector
21. Knock Sensor

Cable, Wire, and Hose Routing

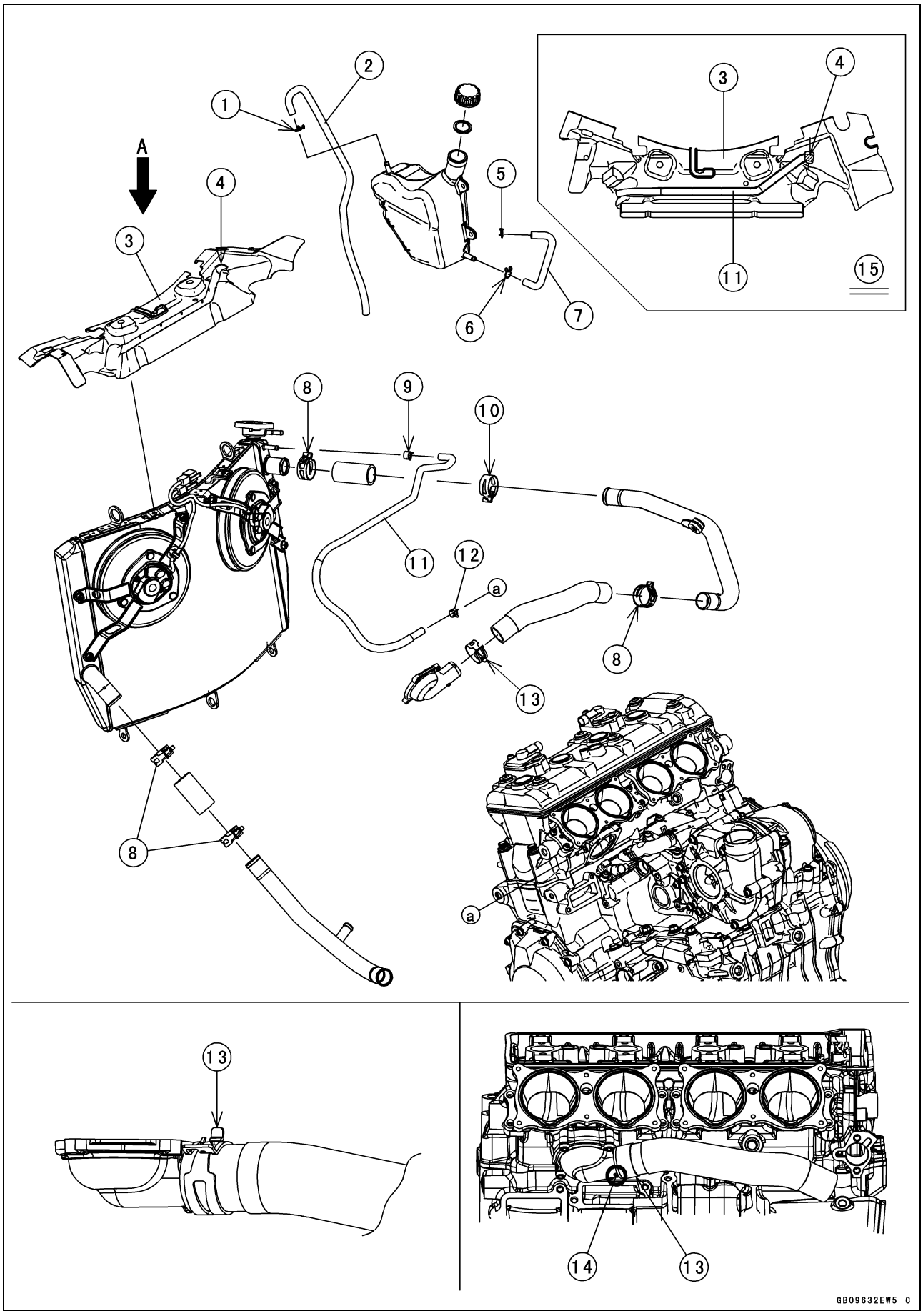

Cable, Wire, and Hose Routing

1. Clamp (Hold the reserve tank overflow hose.)
2. Reserve Tank Overflow Hose (Install its paint mark to the reserve tank side. Face the paint mark backward.)
3. Radiator Cover
4. Run the air bleeder hose into the hole of the radiator cover. Align the tape portion of the air bleeder hose with the hole.
5. Clamp (Hold the reserve tank hose. Face its knob to right side of the vehicle.)
6. Clamp (Hold the reserve tank hose.)
7. Reserve Tank Hose (Install its paint mark to the reserve tank side. Face the paint mark to the outside of the vehicle.)
8. Clamps (Hold the water hoses. Face their knobs to the top.)
9. Clamp (Hold the air bleeder hose. Face its knob to the right side of the vehicle.)
10. Clamp (Hold the water hose. Face its knob to the bottom.)
11. Air Bleeder Hose
12. Clamp (Hold the air bleeder hose. Face its knob backward.)
13. Clamp (Hold the water hose. Face its knob to the engine as shown.)
14. Align the paint mark of the water hose with the projection of the thermostat housing cover.
15. Viewed from A

Cable, Wire, and Hose Routing

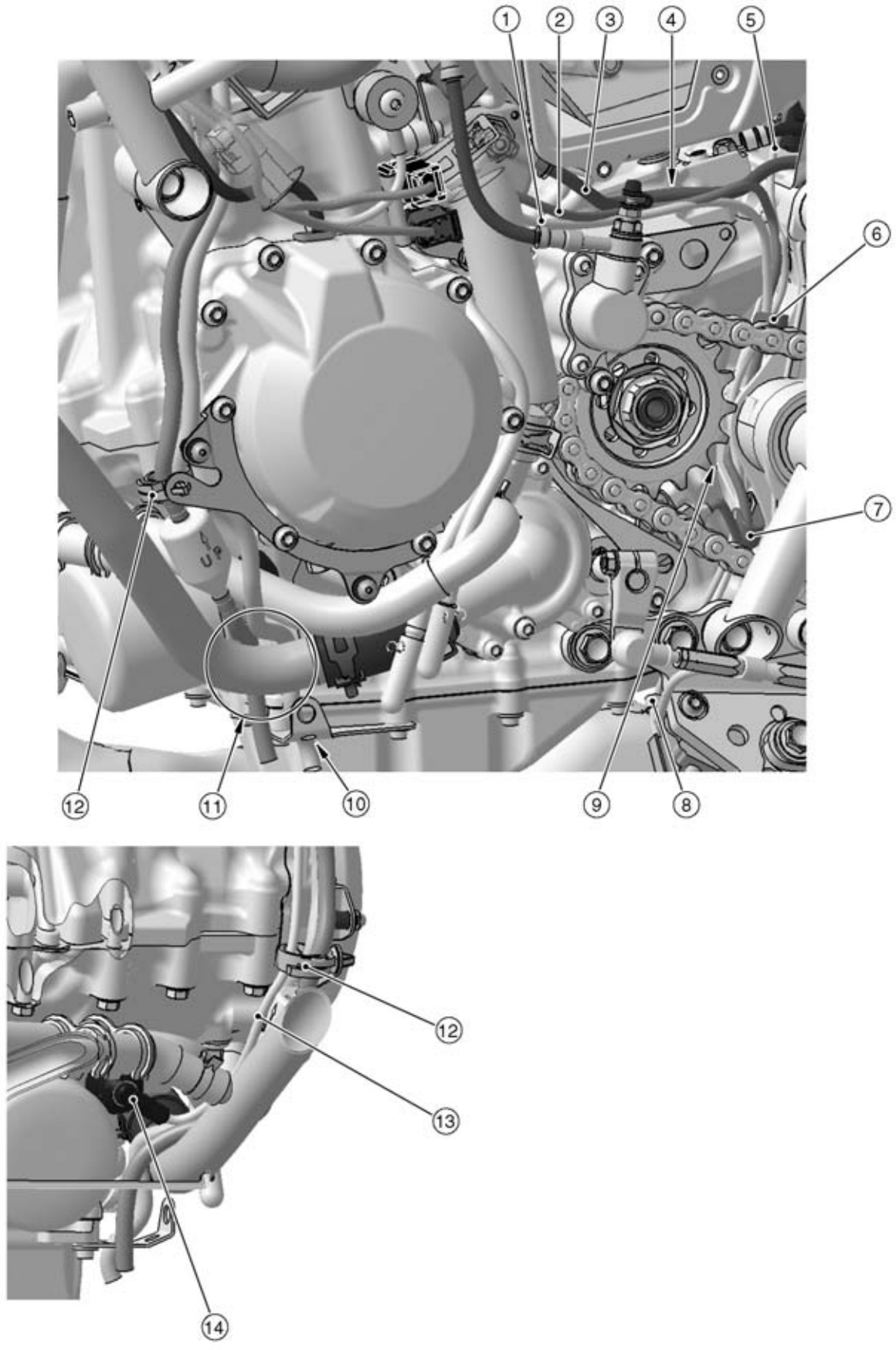

Cable, Wire, and Hose Routing

1. Quick Shifter Sensor Lead
2. Gear Position Sensor Lead
3. Starter Motor Cable (Run it to the inside of other leads.)
4. Run the quick shifter sensor lead, gear position sensor lead and the starter motor cable between the ribs of the engine sprocket cover.
5. Side Stand Switch Lead
6. Clamp (Hold the quick shifter sensor lead, gear position sensor lead and side stand switch lead. Hold the quick shifter sensor lead at the taped portion.)
7. Clamp (Hold the quick shifter sensor lead, gear position sensor lead and side stand switch lead.)
8. Clamp (Hold the quick shifter sensor lead and side stand switch lead.)
9. Run the quick shifter sensor lead, gear position sensor lead and side stand switch lead to the inside of the rib of the swingarm mounting plate.
10. Run the fuel tank drain hose into the hole of the lower fairing bracket.
11. Run the fuel tank breather hose (US and CA models), fuel tank drain hose and oil pressure switch lead to the inside of the vehicle.)
12. Clamp (Hold the oil pressure switch lead, fuel tank breather hose (US and CA models) and fuel tank drain hose.)
13. Oil Pressure Switch Lead (Run it to the inside of the hoses.)
14. Install the oil pressure switch terminal as shown.

Cable, Wire, and Hose Routing

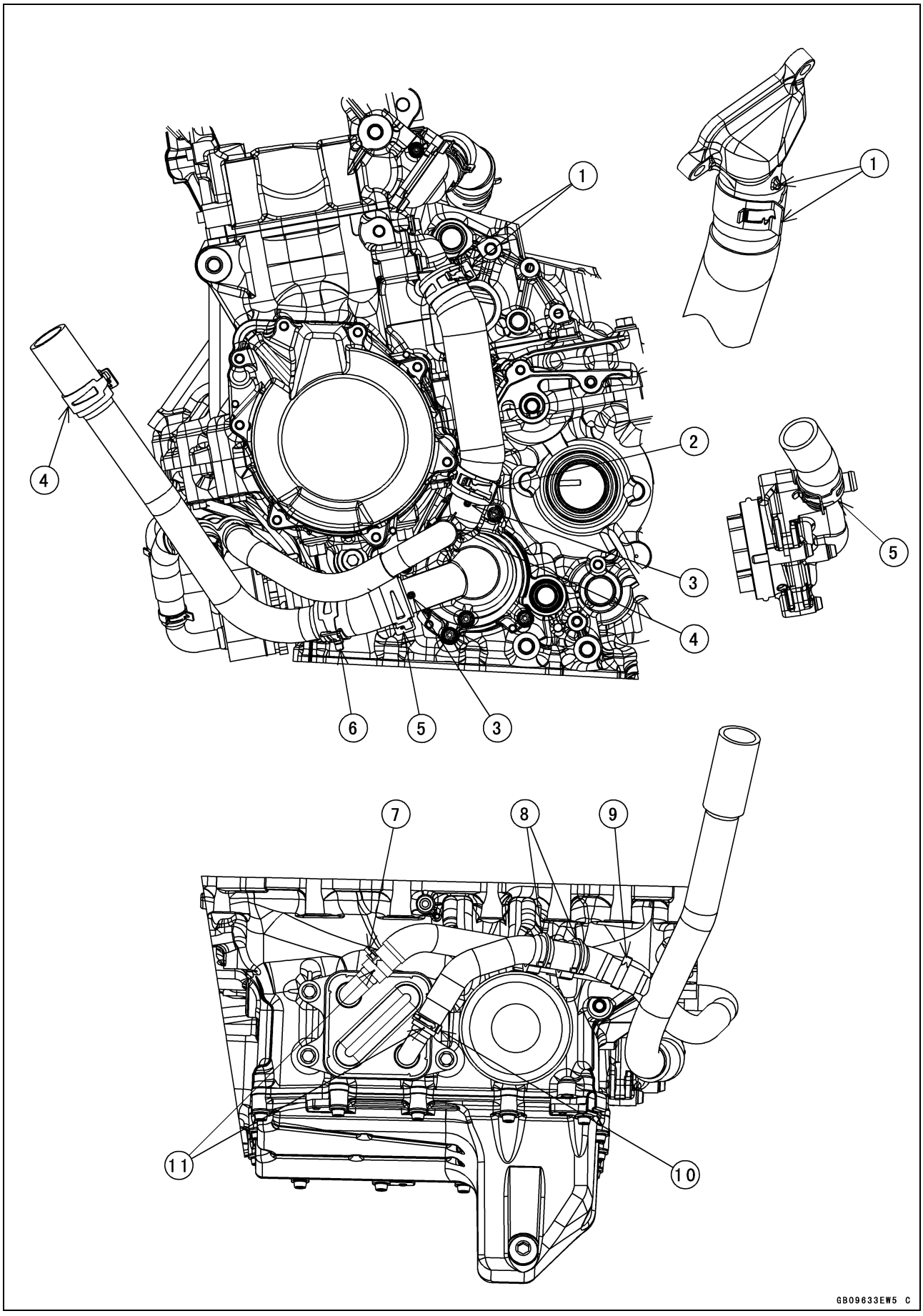

Cable, Wire, and Hose Routing

1. Clamp (Hold the water hose. Align its knob with the projection of the water hose fitting cover.)
2. Clamp (Hold the water hose. Face its knob to left side of the vehicle.)
3. Align the paint mark of the water hose with the projection of the water pump cover.
4. Clamps (Hold the water hose. Face their knobs backward.)
5. Clamp (Hold the water hose. Face its outside knob to the bottom.)
6. Clamp (Hold the water hose. Face the center of the knob to the bottom.)
7. Clamp (Hold the water hose. Face its knob to the top.)
8. Clamps (Hold the water hoses. Install the clamps from the top.)
9. Clamp (Hold the water hose. Face its knob to the top.)
10. Clamp (Hold the water hose. Face its knob forward.)
11. Face the paint mark of the water hoses forward.

Cable, Wire, and Hose Routing

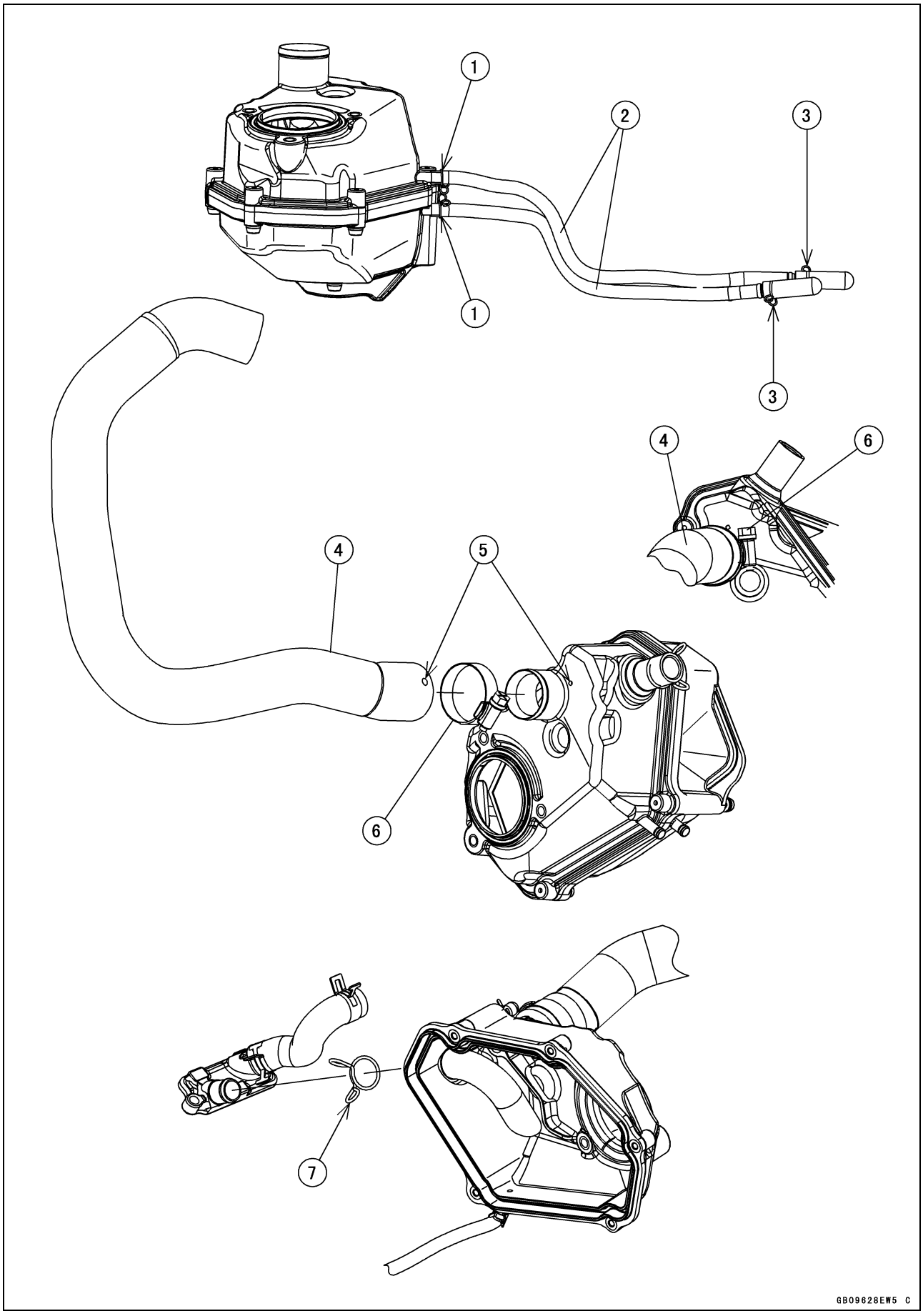

Cable, Wire, and Hose Routing

1. Clamps (Hold the air cleaner drain hoses so that the clamps face to mating surface of the air cleaner housing.)
2. Air Cleaner Drain Hoses
3. Clamps (Hold the air cleaner drain hose caps.)
4. Blow-Off Valve Hose
5. Align the paint mark with the projection of the air cleaner housing.
6. Clamp (Hold the blow-off valve hose as shown.)
7. Clamp (Hold the breather hose so that the clamp faces to left side.)

Cable, Wire, and Hose Routing

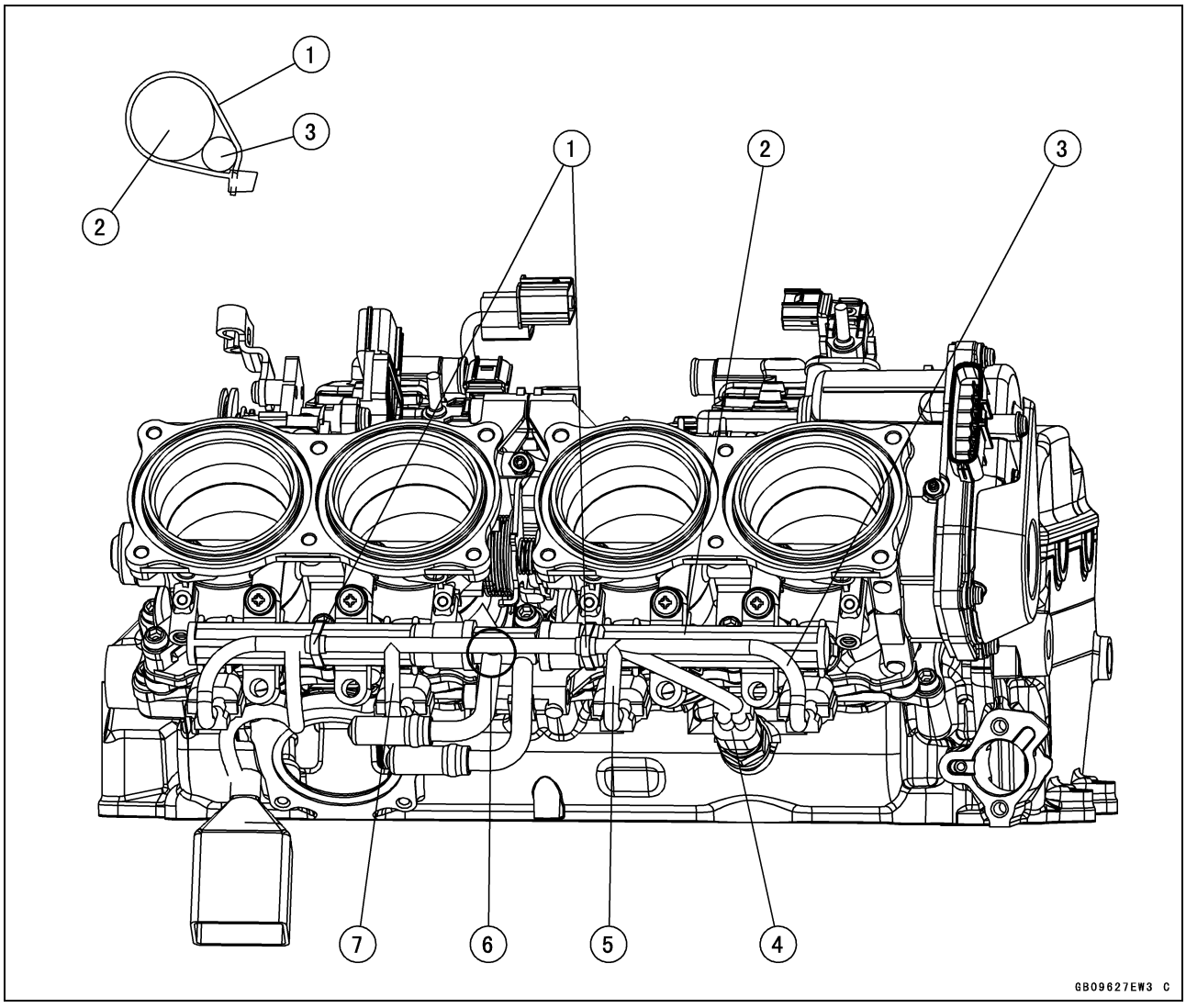

1. Bands (Hold the delivery pipe and subharness. Install them to the tape positions.)
2. Delivery Pipe
3. Subharness
4. Water Temperature Sensor Lead Connector
5. Subharness with the “3” Mark (to Primary Fuel Injector #3)
6. Touch the subharness to the delivery pipe.
7. Subharness with the “2” Mark (to Primary Fuel Injector #2)

Cable, Wire, and Hose Routing

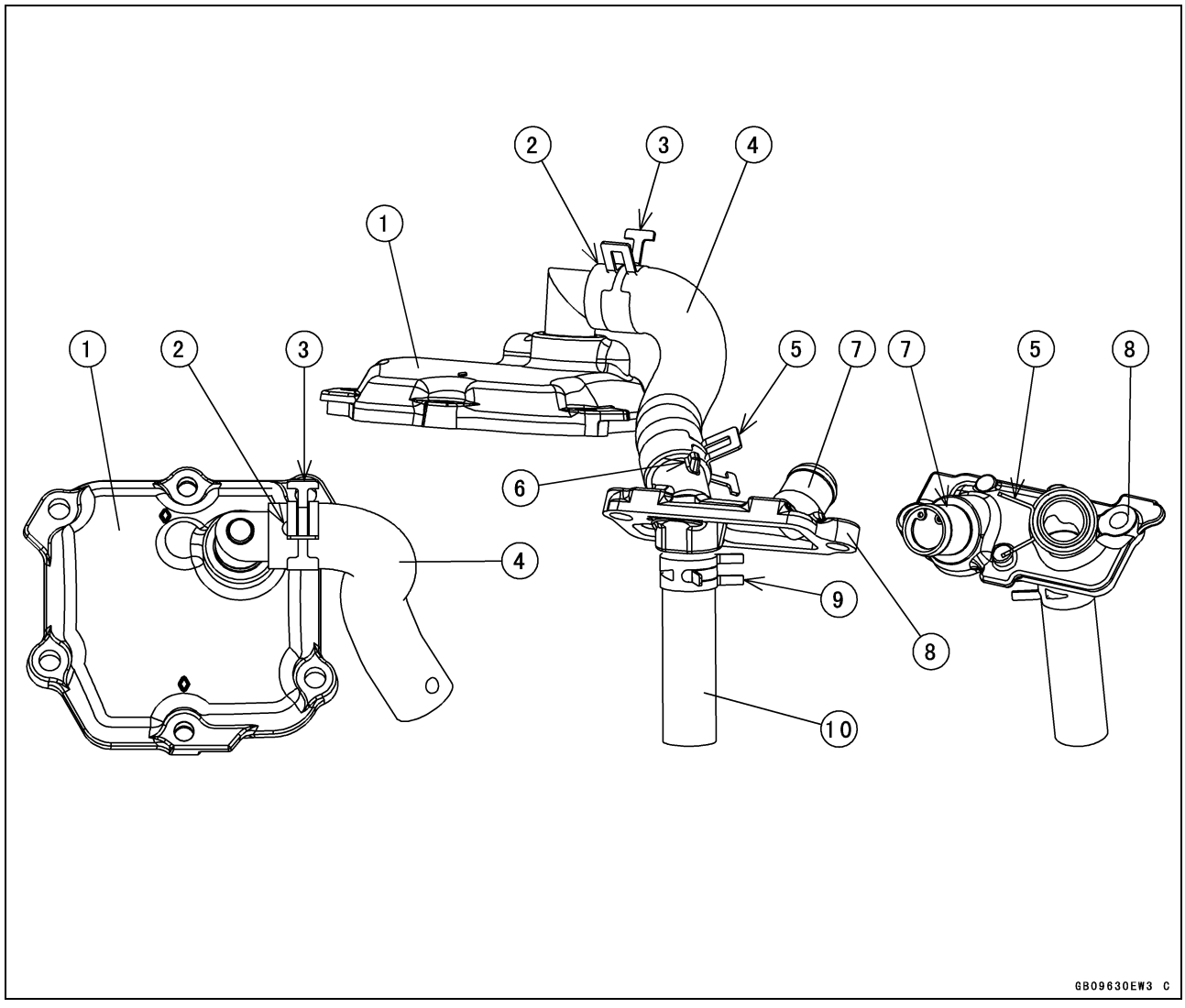

1. Right Breather Cover
2. Install the breather hose so that the paint mark faces vertically to the mating surface.
3. Clamp (Hold the breather hose as shown.)
4. Breather Hose (to Left Breather Cover)
5. Clamp (Hold the breather hose so that the clamp faces to the hose fitting.)
6. Align the paint mark with the projection of the left breather cover.
7. Hose Fitting
8. Left Breather Cover
9. Clamp (Hold the breather hose so that the clamp faces to the left side.)
10. Breather Hose (to Crankcase)

Cable, Wire, and Hose Routing

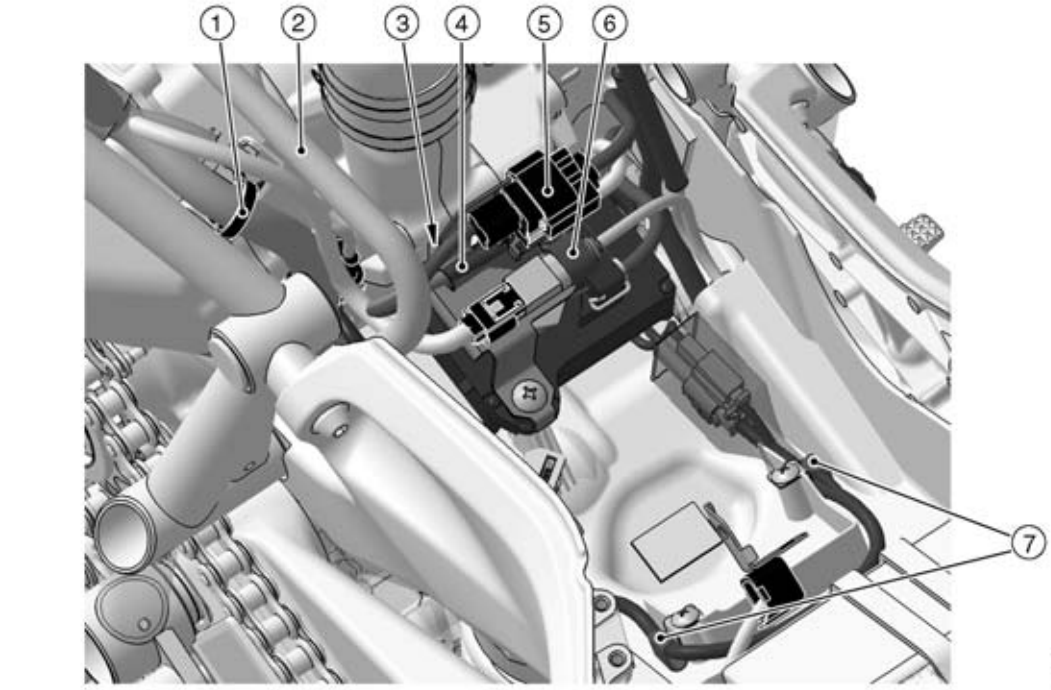

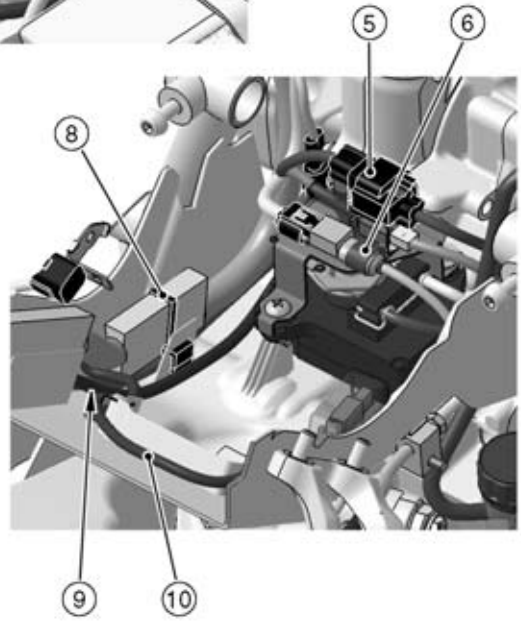

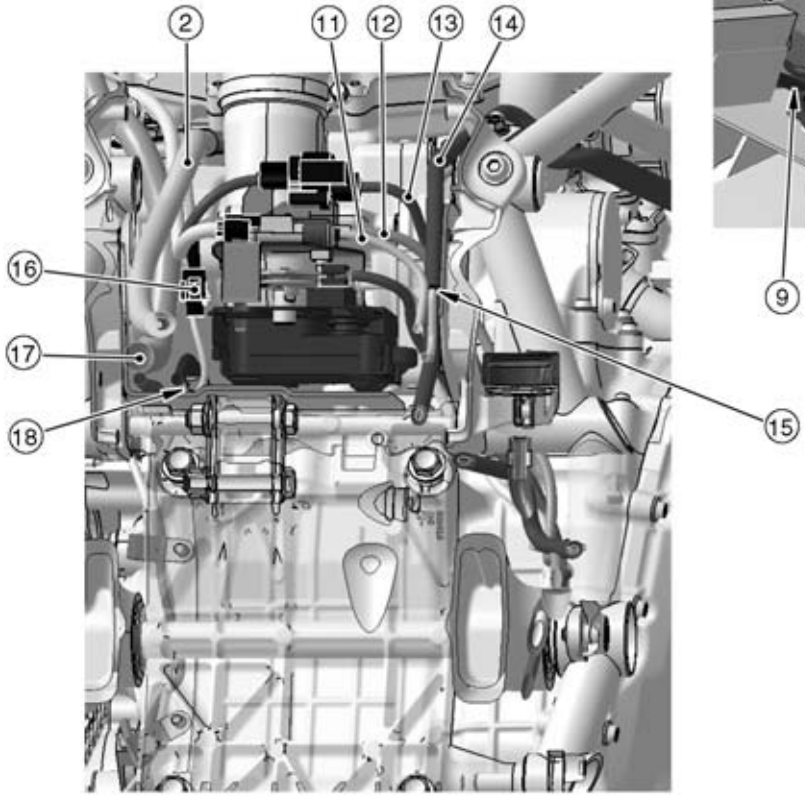

GB09071F G

Cable, Wire, and Hose Routing

1. Clamp (Hold the main harness. Install it to the main frame.)
2. Primary Fuel Hose
3. Edge of Bracket
4. Rear Brake Light Switch Lead Connector with Dust Cover (Align the dust cover end with the edge of bracket.)
5. Oxygen Sensor Lead Connector (Install it to the bracket.)
6. Clamp (Hold the constricted portion of the rear wheel rotation sensor lead connector.)
7. Clamps (Hold the exhaust butterfly valve actuator lead.)
8. Band (Hold the main harness. Install it to the rib of the rear fender.)
9. Run the exhaust butterfly valve actuator lead under the main harness.
10. Exhaust Butterfly Valve Actuator Lead
11. Rear Wheel Rotation Sensor Lead
12. Rear Brake Light Switch Lead
13. Oxygen Sensor Lead
14. Brake Pipe
15. Run the oxygen sensor lead and the rear brake light switch lead under the brake pipe.
16. Side Stand Switch Lead Connector (Run it to the inside of the main harness and the primary fuel hose.)
17. Main Harness (Run it under the primary fuel hose.)
18. Run the side stand switch lead to the inside of the battery negative (–) cable (engine ground lead).

Cable, Wire, and Hose Routing

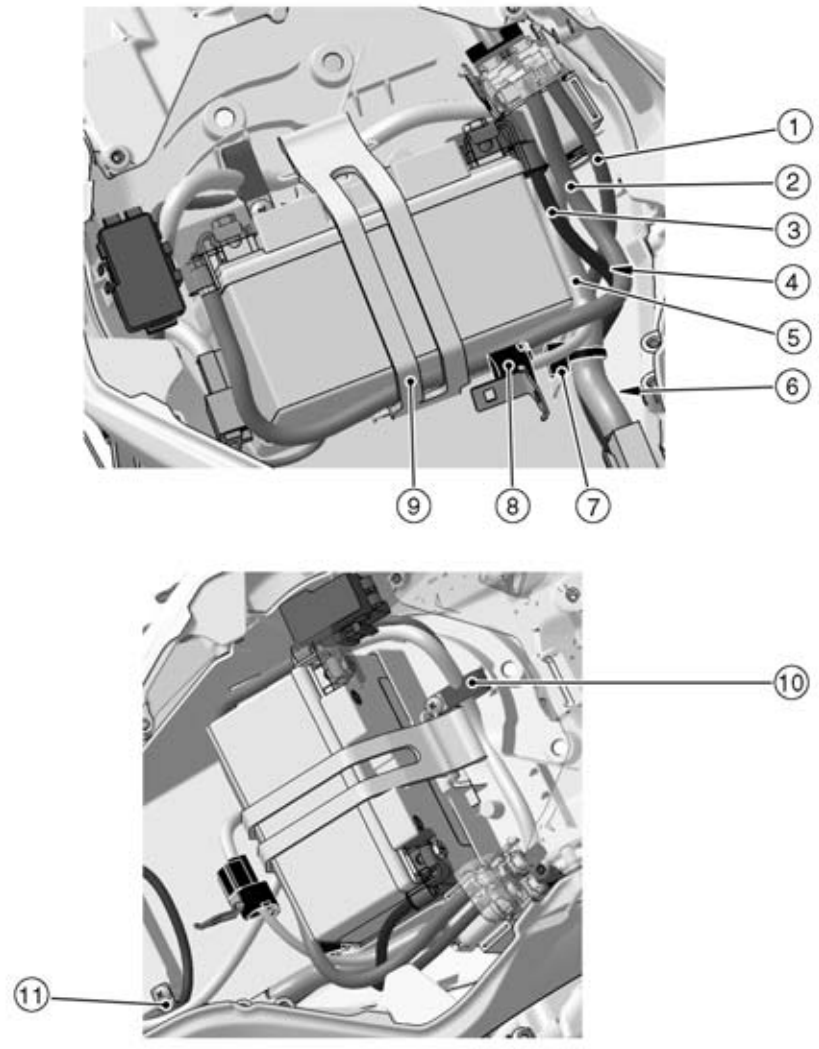

1. Starter Motor Cable
2. Battery Positive (+) Cable
3. Battery Negative (–) Cable
4. Run the battery negative (–) cable above the starter motor cable.
5. Main Harness
6. Run the main harness above the starter motor cable and the battery negative (–) cable.
7. Clamp (Hold the main harness. Install it to he rib of the rear fender.)
8. Fuel Pump Lead Connector (Install it to the bracket.)
9. Band (Hold the battery positive (+) cable.)
10. Clamp (Hold the brach leads of main harness.)
11. Clamp (Hold the exhaust butterfly valve actuator lead.)

Cable, Wire, and Hose Routing

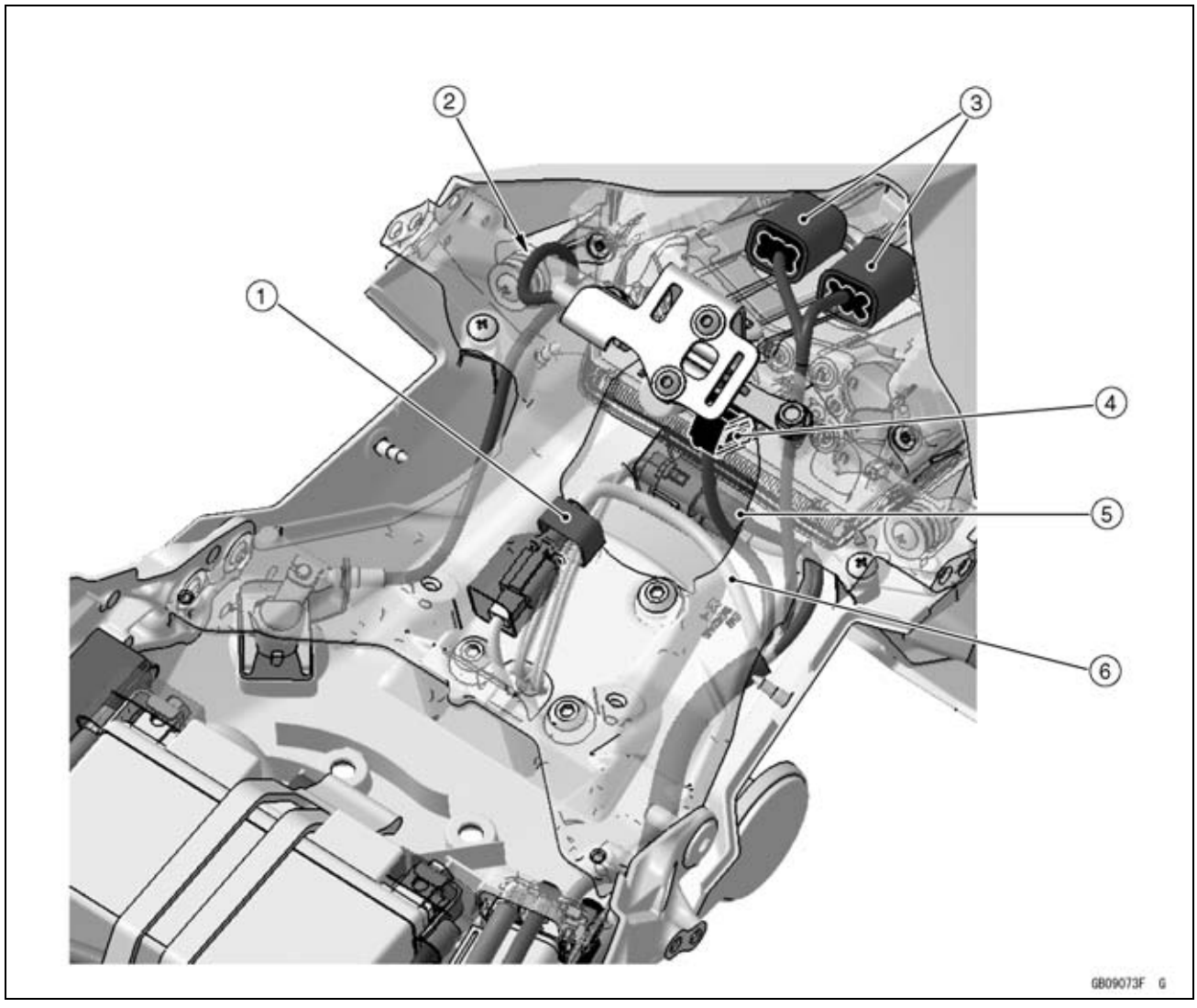

1. Clamp (Hold the turn signal light leads and the constricted part of the dust cover.)
2. Run the seat lock cable in back of the frame pipe.
3. ABS Kawasaki Self-Diagnosis System Connector and Immobilizer/Kawasaki Diagnostic System Connector (Place them on the tail/brale light.)
4. Tail/Brake Light Lead Connector
5. Rear Turn Signal Light Lead Connectors
6. License Plate Light Lead

Cable, Wire, and Hose Routing

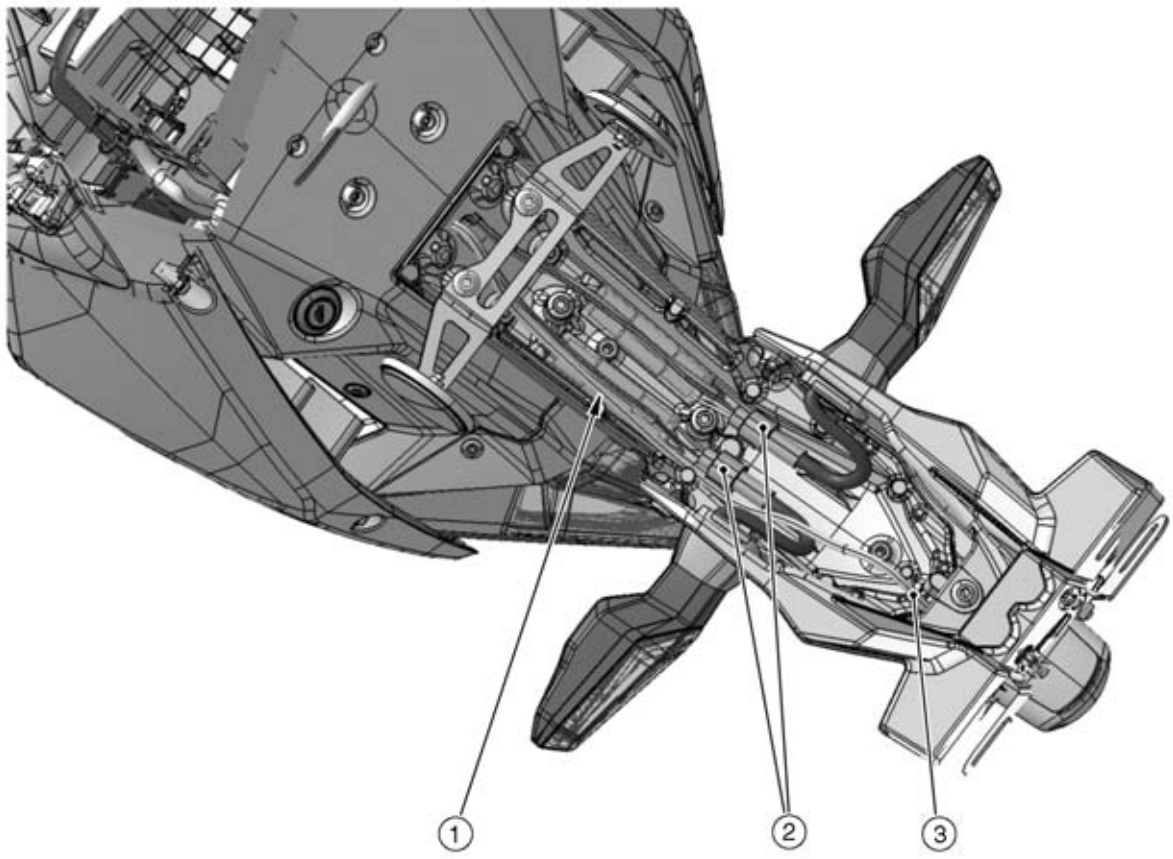

1. Do not pinch the license plate light lead.
2. Turn Signal Light Lead Connectors
3. License Plate Light Lead

Cable, Wire, and Hose Routing

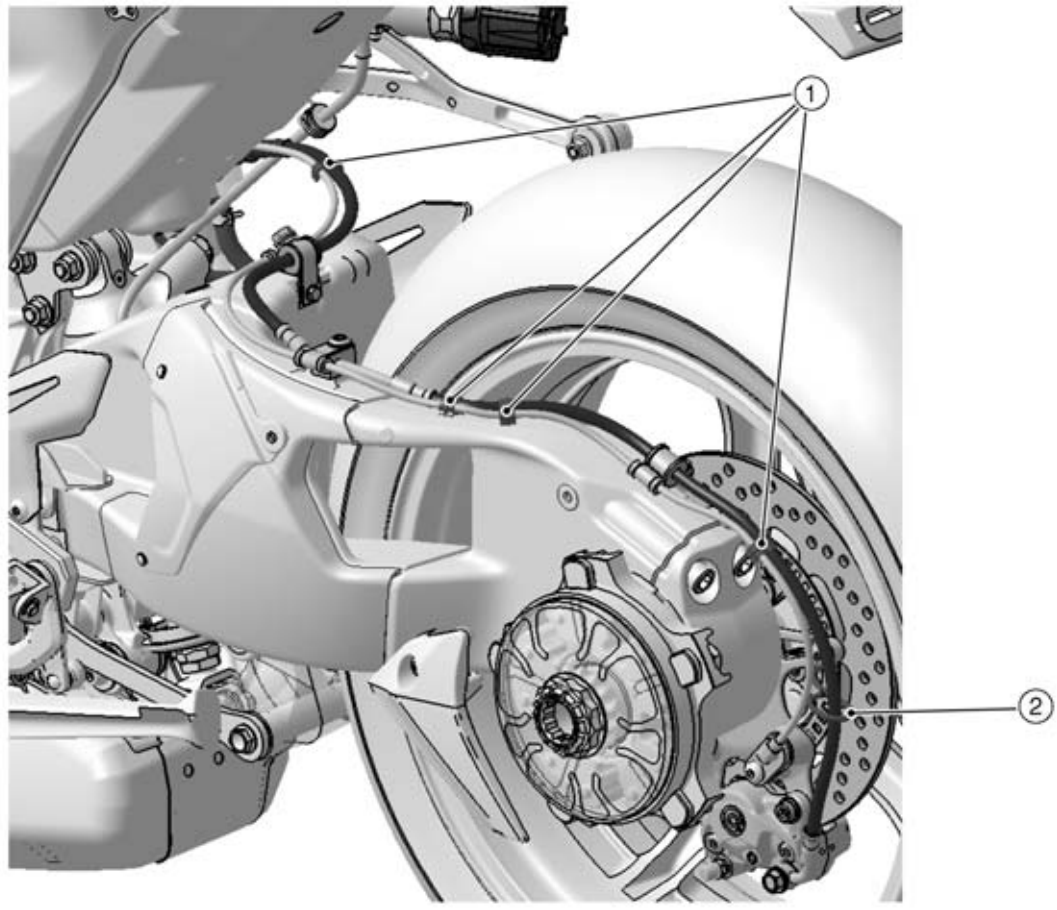

1. Clamps (Hold the rear wheel rotation sensor lead and the brake hose.)
2. Guide (Hold the brake hose only.)

Cable, Wire, and Hose Routing

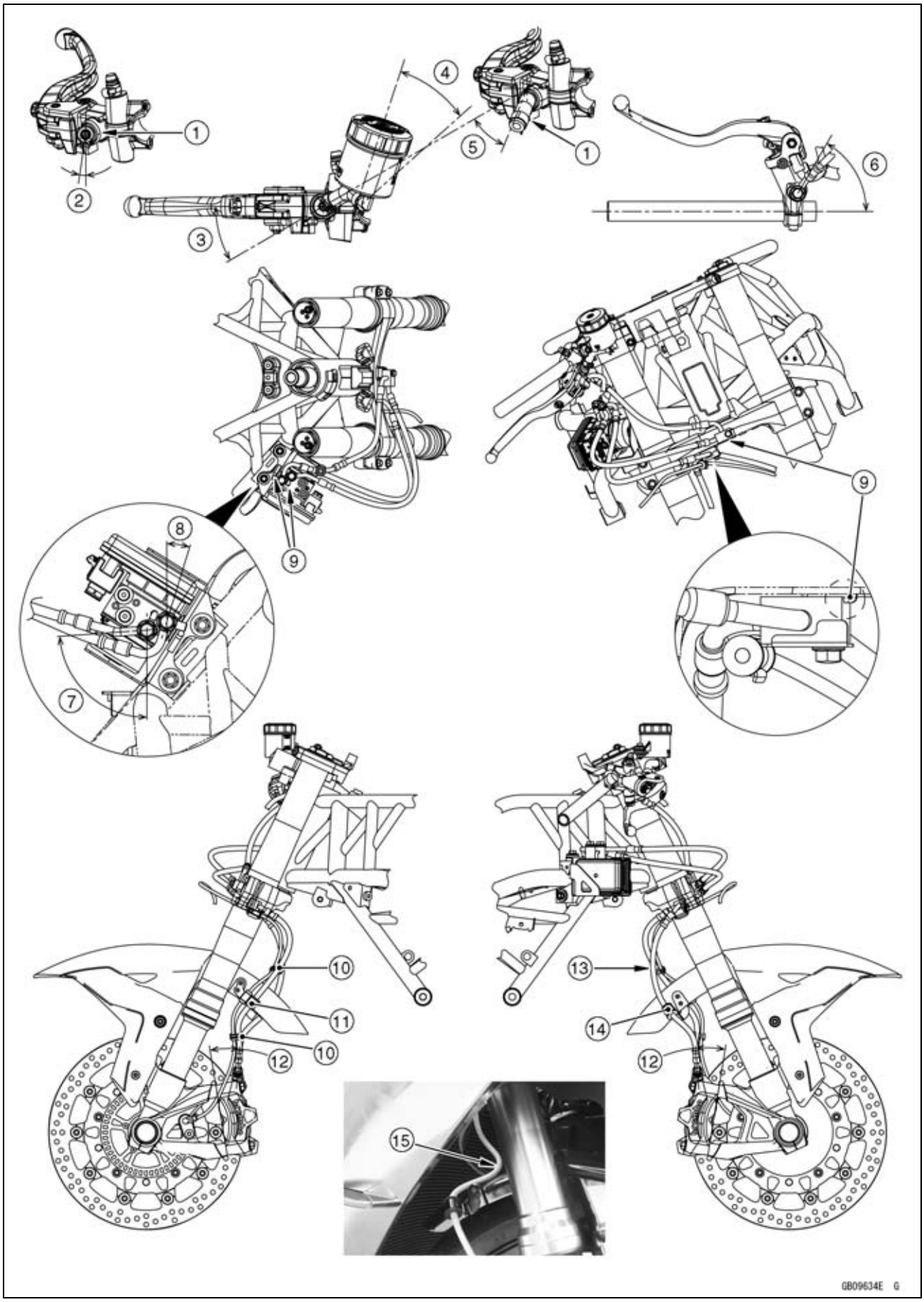

Cable, Wire, and Hose Routing

1. Clamps (Hold the brake hose.)
2. Installation angle of the clamp knob is about 8°.
3. Installation angle of the brake hose is 30°.
4. Installation angle of the front master cylinder reservoir tank is 30°.
5. Installation angle of the brake hose is 40°.
6. Installation angle of the brake hose is 60°.
7. About 86°
8. About 17°
9. Touch the brake hose fitting to the stopper.
10. Clamps (Hold the brake hose and tape position of the front wheel rotation sensor lead.)
11. Clamp (Hold the brake hose and front wheel rotation sensor lead.)
12. 14°
13. Good
14. Clamp (Hold the brake hose.)
15. Bad

Cable, Wire, and Hose Routing

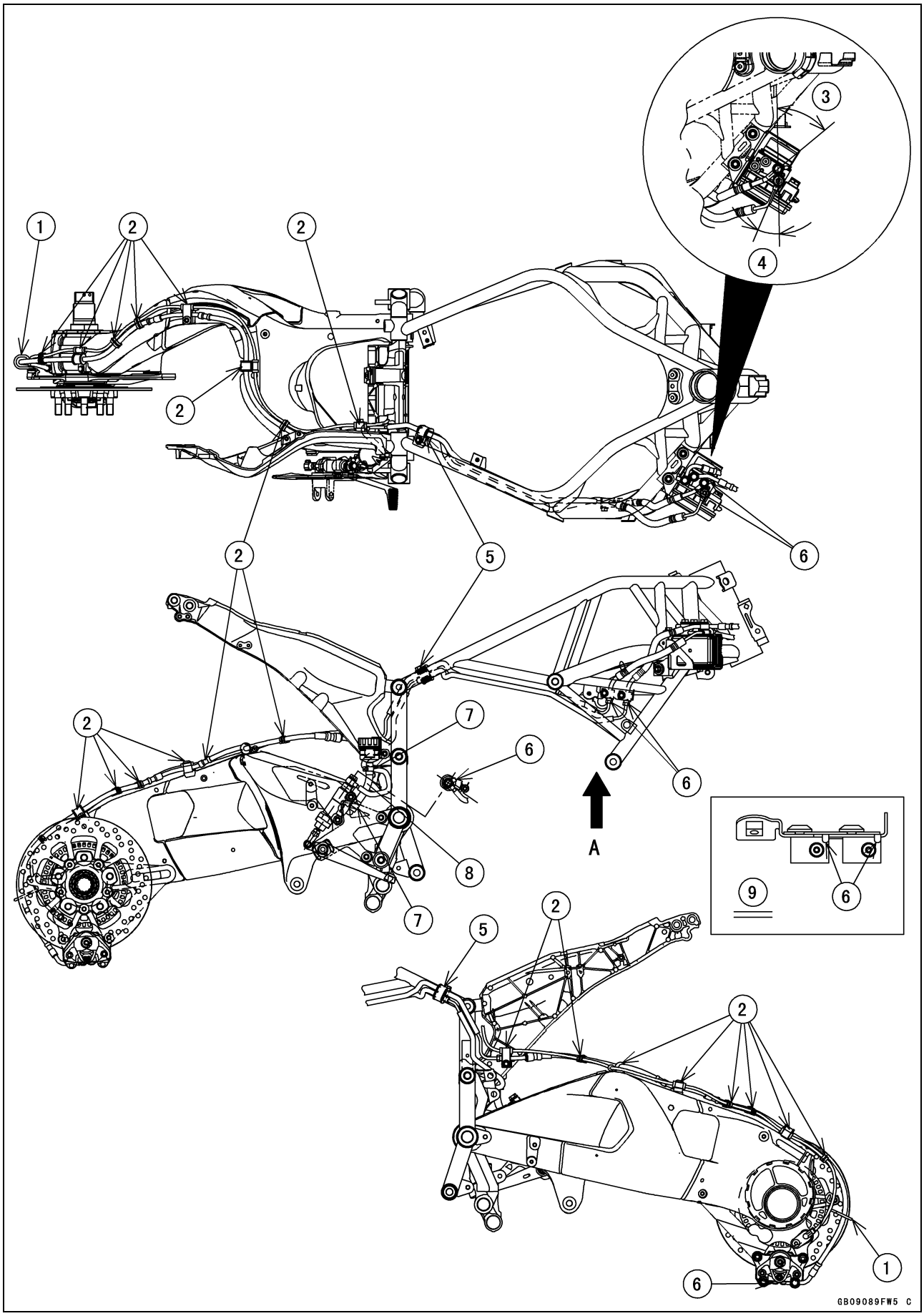

Cable, Wire, and Hose Routing

1. Clamp (Hold the brake hose.)
2. Clamps (Hold the brake hose and rear wheel rotation sensor lead.)
3. About 50°
4. About 23°
5. Clamp (Hold the brake hoses.)
6. Touch the brake hose fitting to the stopper.
7. Clamps (Hold the brake hose so that the clamp faces to rear side.)
8. Install the brake hose so that the paint mark faces to rear master cylinder side and inside of the frame.
9. Viewed from A

Troubleshooting Guide

NOTE

○*Refer to the Fuel System chapter for most of DFI trouble shooting guide.*

○*This is not an exhaustive list, giving every possible cause for each problem listed. It is meant simply as a rough guide to assist the troubleshooting for some of the more common difficulties.*

Engine Doesn't Start, Starting Difficulty:

Starter motor not rotating:
- Ignition switch not on and engine start/stop switch to engine stop position
- Starter lockout switch or gear position sensor trouble
- Starter motor trouble
- Battery voltage low
- Starter circuit relay not contacting or operating
- Engine start/stop switch not contacting
- Starter system wiring shorted or open
- Ignition switch trouble
- Engine start/stop switch trouble
- Main or ignition fuse blown

Starter motor rotating but engine doesn't turn over:
- Vehicle-down sensor (DFI) coming off
- Immobilizer system trouble (Equipped Models)
- Starter clutch trouble
- Starter idle gear trouble

Engine won't turn over:
- Valve seizure
- Valve lifter seizure
- Cylinder, piston seizure
- Crankshaft seizure
- Connecting rod small end seizure
- Connecting rod big end seizure
- Transmission gear or bearing seizure
- Camshaft seizure
- Starter idle gear seizure
- Balancer bearing seizure

No fuel flow:
- No fuel in tank
- Fuel pump trouble
- Fuel tank air vent obstructed
- Fuel filter clogged
- Fuel line clogged

No spark; spark weak:
- Vehicle-down sensor (DFI) coming off
- Ignition switch not on
- Clutch lever not pulled in or gear not in neutral
- Battery voltage low
- Immobilizer system trouble (Equipped Models)
- Spark plug dirty, broken, or gap maladjusted
- Spark plug incorrect
- Stick coil shorted or not in good contact
- Stick coil trouble
- ECU trouble
- Camshaft position sensor trouble
- Gear position sensor, starter lockout switch, or side stand switch trouble
- Crankshaft sensor trouble
- Ignition switch or engine start/stop switch shorted
- Starter system wiring shorted or open
- Main or ignition fuse blown

Fuel/air mixture incorrect:
- Air passage clogged
- Air cleaner clogged, poorly sealed, or missing
- Leak from oil filler plug, crankcase breather hose or air cleaner drain hose.

Compression Low:
- Spark plug loose
- Cylinder head not sufficiently tightened down
- Cylinder, piston worn
- Piston ring bad (worn, weak, broken, or sticking)
- Piston ring/groove clearance excessive
- Cylinder head gasket damaged
- Cylinder head warped
- Valve spring broken or weak
- No valve clearance
- Valve not seating properly (valve bent, worn, or carbon accumulation on the seating surface)

Poor Running at Low Speed:

Spark weak:
- Battery voltage low
- Immobilizer system trouble (Equipped Models)
- Stick coil trouble
- Stick coil shorted or not in good contact
- Spark plug dirty, broken, or maladjusted
- Spark plug incorrect
- ECU trouble
- Camshaft position sensor trouble
- Crankshaft sensor trouble

Fuel/air mixture incorrect:
- Air passage clogged
- Air cleaner clogged, poorly sealed, or missing
- Fuel tank air vent obstructed
- Fuel pump trouble
- Fuel to injector insufficient
- Supercharger malfunction
- Fuel line clogged

Troubleshooting Guide

Throttle body assy holder loose
Throttle body assy loose
Air intake chamber loose
Air cleaner housing loose

Compression low:
Spark plug loose
Cylinder head not sufficiently tightened down
No valve clearance
Cylinder, piston worn
Piston ring bad (worn, weak, broken, or sticking)
Piston ring/groove clearance excessive
Cylinder head gasket damaged
Cylinder head warped
Valve spring broken or weak
Valve not seating properly (valve bent, worn, or carbon accumulation on the seating surface)
Camshaft cam worm

Other:
ECU trouble
Engine oil viscosity too high
Drive train trouble
Brake dragging
Clutch slipping
Engine overheating
Air suction valve trouble
Air switching valve trouble

Poor Running or No Power at High Speed:

Firing incorrect:
Spark plug dirty, broken, or maladjusted
Spark plug incorrect
Stick coil shorted or not in good contact trouble
Stick coil trouble
ECU trouble

Fuel/air mixture incorrect:
Air cleaner clogged, poorly sealed, or missing
Air cleaner housing loose
Water or foreign matter in fuel
Throttle body assy holder loose
Throttle body assy loose
Air intake chamber loose
Fuel to injector insufficient
Fuel tank air vent obstructed
Fuel line clogged
Fuel pump trouble
Supercharger malfunction

Compression low:
Spark plug loose
Cylinder head not sufficiently tightened down
No valve clearance
Cylinder, piston worn
Piston ring bad (worn, weak, broken, or sticking)
Piston ring/groove clearance excessive
Cylinder head gasket damaged
Cylinder head warped
Valve spring broken or weak
Valve not seating properly (valve bent, worn, or carbon accumulation on the seating surface.)

Knocking:
Carbon built up in combustion chamber
Fuel poor quality or incorrect
Spark plug incorrect
ECU trouble

Miscellaneous:
Throttle valve won't fully open
Brake dragging
Clutch slipping
Engine overheating
Engine oil level too high
Engine oil viscosity too high
Drive train trouble
Camshaft cam worm
Air suction valve trouble
Air switching valve trouble
Catalytic converter melt down due to muffler overheating (KLEEN)

Overheating:

Firing incorrect:
Spark plug dirty, broken, or maladjusted
Spark plug incorrect
ECU trouble

Muffler overheating:
For KLEEN, do not run the engine even if with only one cylinder misfiring or poor running (Request the nearest service facility to correct it)
For KLEEN, do not push-start with a dead battery (Connect another full-charged battery with jumper cables, and start the engine using the electric starter)
For KLEEN, do not start the engine under misfire due to spark plug fouling or poor connection of the stick coil
For KLEEN, do not coast the motorcycle with the ignition switch off (Turn the ignition switch on and run the engine)
ECU trouble

Fuel/air mixture incorrect:
Throttle body assy holder loose
Throttle body assy loose
Air intake chamber loose
Air cleaner housing loose
Air cleaner poorly sealed, or missing
Air cleaner clogged

Troubleshooting Guide

Compression high:
Carbon built up in combustion chamber
Engine load faulty:
Clutch slipping
Engine oil level too high
Engine oil viscosity too high
Drive train trouble
Brake dragging
Lubrication inadequate:
Engine oil level too low
Engine oil poor quality or incorrect
Oil cooler incorrect:
Oil cooler clogged
Water temperature meter incorrect:
Water temperature meter broken
Water temperature sensor broken
Coolant incorrect:
Coolant level too low
Coolant deteriorated
Wrong coolant mixed ratio
Cooling system component incorrect:
Radiator fin damaged
Radiator clogged
Thermostat trouble
Radiator cap trouble
Radiator fan relay trouble
Fan motor broken
Fan blade damaged
Water pump not turning
Water pump impeller damaged

Over Cooling:

Water temperature meter incorrect:
Water temperature meter broken
Water temperature sensor broken
Cooling system component incorrect:
Thermostat trouble

Clutch Operation Faulty:

Clutch slipping:
Friction plate worn or warped
Steel plate worn or warped
Clutch spring broken or weak
Clutch hub or housing unevenly worn
Clutch master cylinder trouble
Clutch slave cylinder trouble
Clutch not disengaging properly:
Clutch plate warped or too rough
Clutch spring compression uneven
Engine oil deteriorated
Engine oil viscosity too high
Engine oil level too high
Clutch housing frozen on drive shaft
Clutch hub nut loose
Clutch hub spline damaged
Clutch friction plate installed wrong
Clutch slave cylinder trouble
Clutch fluid deteriorated
Clutch fluid leakage
Air in clutch fluid line
Clutch master cylinder primary or secondary cup damage
Clutch master cylinder scratched inside

Gear Shifting Faulty:

Doesn't go into gear; shift pedal doesn't return:
Clutch not disengaging
Shift fork bent or seized
Gear positioning lever binding
Shift return spring weak or broken
Shift return spring pin loose
Shift mechanism arm spring broken
Shift mechanism arm broken
Shift pawl broken
Jumps out of gear:
Shift fork ear worn, bent
Shifter groove worn
Gear dogs and/or dog holes worn
Shift drum groove worn
Gear positioning lever spring weak or broken
Shift fork guide pin worn
Drive shaft, output shaft, and/or gear splines worn
Overshifts:
Gear positioning lever spring weak or broken
Shift mechanism arm spring broken

Abnormal Engine Noise:

Knocking:
ECU trouble
Carbon built up in combustion chamber
Fuel poor quality or incorrect
Spark plug incorrect
Overheating
Piston slap:
Cylinder/piston clearance excessive
Cylinder, piston worn
Connecting rod bent
Piston pin, piston pin hole worn
Valve noise:
Valve clearance incorrect
Valve spring broken or weak
Camshaft bearing worn
Valve lifter worn
Other noise:
Connecting rod small end clearance excessive
Connecting rod big end clearance excessive
Piston ring/groove clearance excessive
Piston ring worn, broken, or stuck

Troubleshooting Guide

Piston ring groove worn
Piston seizure, damage
Cylinder head gasket leaking
Exhaust pipe leaking at cylinder head connection
Crankshaft runout excessive
Engine mount loose
Crankshaft bearing worn
Primary gear worn or chipped
Camshaft chain tensioner trouble
Camshaft chain, sprocket, guide worn
Air suction valve damaged
Air switching valve damaged
Alternator rotor loose
Catalytic converter melt down due to muffler overheating (KLEEN)
Exhaust butterfly valve cable loose
Balancer gear worn or chipped
Balancer shaft position maladjusted
Balancer bearing worn
Balancer rubber damper damaged
Supercharger chain tensioner noise (Refer to the Supercharger Chain Tensioner Installation in the Fuel System (DFI) chapter)

Abnormal Drive Train Noise:

Clutch noise:
Clutch damper weak or damaged
Clutch housing/friction plate clearance excessive
Clutch housing gear worn
Wrong installation of outside friction plate

Transmission noise:
Bearings worn
Transmission gear worn or chipped
Metal chips jammed in gear teeth
Engine oil insufficient

Drive line noise:
Drive chain adjusted improperly
Drive chain worn
Rear and/or engine sprocket worn
Chain lubrication insufficient
Rear wheel misaligned

Abnormal Frame Noise:

Front fork noise:
Oil insufficient or too thin
Spring weak or broken

Rear shock absorber noise:
Shock absorber damaged

Disc brake noise:
Pad installed incorrectly
Pad surface glazed
Disc warped
Caliper trouble

Other noise:
Bracket, nut, bolt, etc. not properly mounted or tightened

Red Oil Pressure Warning Indicator Light (LED) Doesn't Go OFF:

Engine oil pump damaged
Engine oil screen clogged
Engine oil filter clogged
Engine oil level too low
Engine oil viscosity too low
Camshaft bearing worn
Crankshaft bearing worn
Oil pressure switch damaged
Wiring faulty
Relief valve stuck open
O-ring at the oil passage in the crankcase damaged

Exhaust Smokes Excessively:

White smoke:
Piston oil ring worn
Cylinder worn
Valve oil seal damaged
Valve guide worn
Engine oil level too high

Black smoke:
Air cleaner clogged

Brown smoke:
Air cleaner housing loose
Air cleaner poorly sealed or missing

Handling and/or Stability Unsatisfactory:

Handlebars hard to turn:
Cable routing incorrect
Hose routing incorrect
Wiring routing incorrect
Steering stem nut too tight
Steering stem bearing damaged
Steering stem bearing lubrication inadequate
Steering stem bent
Tire air pressure too low

Handlebars shakes or excessively vibrates:
Tire worn
Swingarm pivot bearing worn
Rim warped, or not balanced
Wheel bearing worn
Handlebar clamp bolt loose
Steering stem nut loose
Front, rear axle runout excessive
Engine mounting bolt loose

Handlebars pulls to one side:
Frame bent

Troubleshooting Guide

Wheel misalignment
Swingarm bent or twisted
Swingarm pivot shaft runout excessive
Steering maladjusted
Front fork bent
Right and left front fork oil level uneven

Shock absorption unsatisfactory:
(Too hard)
Front fork oil excessive
Front fork oil viscosity too high
Rear shock absorber adjustment too hard
Tire air pressure too high
Front fork bent
(Too soft)
Tire air pressure too low
Front fork oil insufficient and/or leaking
Front fork oil viscosity too low
Rear shock adjustment too soft
Front fork, rear shock absorber spring weak
Rear shock absorber oil leaking

Brake Doesn't Hold:

Air in the brake line
Pad or disc worn
Brake fluid leakage
Disc warped
Contaminated pad
Brake fluid deteriorated
Master cylinder trouble

Battery Trouble:

Battery discharged:
Charge insufficient
Battery faulty (too low terminal voltage)
Battery cable making poor contact
Load excessive (e.g., bulb of excessive wattage)
Ignition switch trouble
Alternator trouble
Wiring faulty
Regulator/rectifier trouble

Battery overcharged:
Alternator trouble
Regulator/rectifier trouble
Battery faulty

US, CAL and CA Models

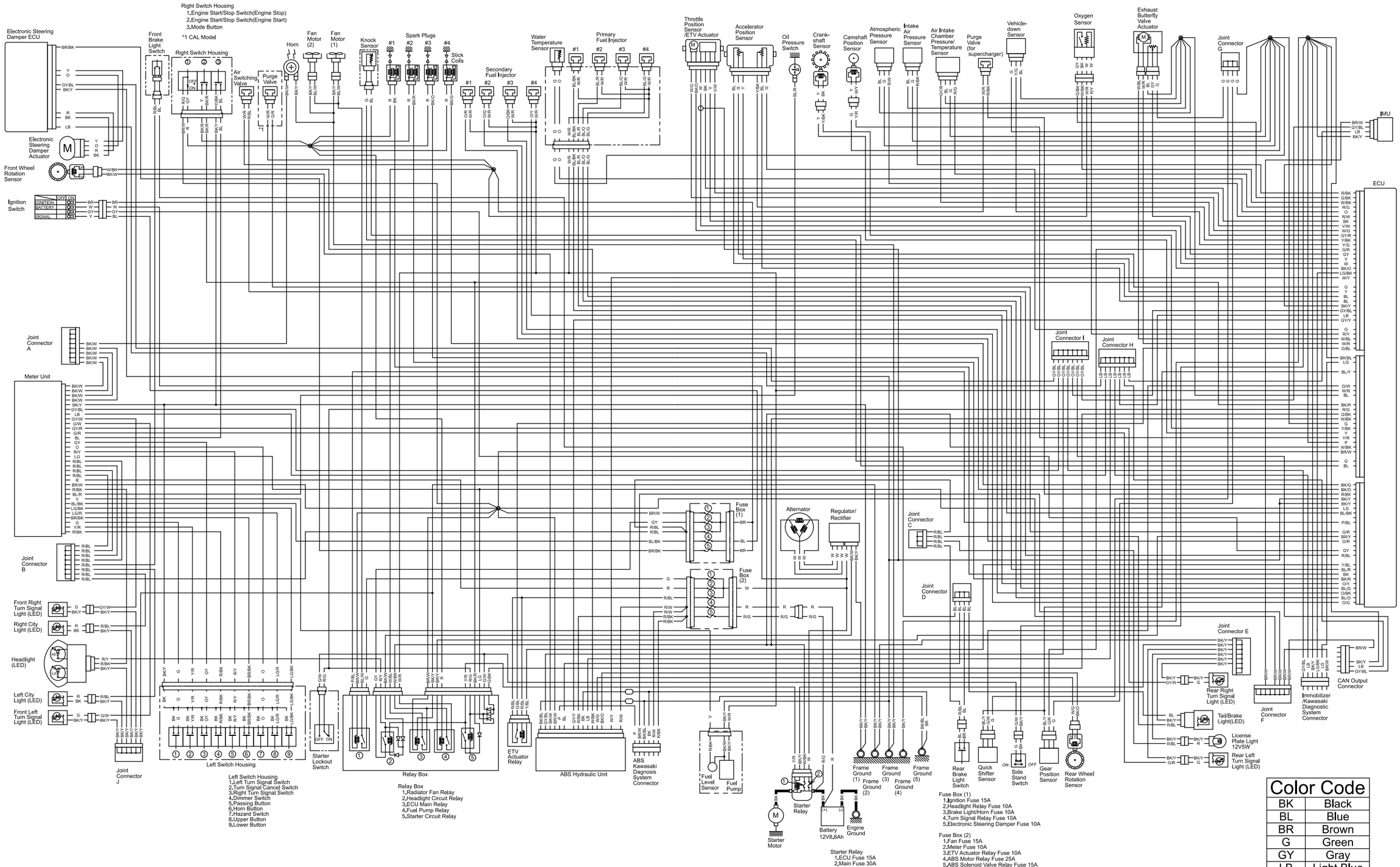

Left Switch Housing
1,Left Turn Signal Switch
2,Turn Signal Cancel Switch
3,Right Turn Signal Switch
4,Dimmer Switch
5,Passing Button
6,Horn Button
7,Hazard Switch
8,Upper Button
9,Lower Button

Relay Box
1,Radiator Fan Relay
2,Headlight Circuit Relay
3,ECU Main Relay
4,Fuel Pump Relay
5,Starter Circuit Relay

Fuse Box (1)
1,Ignition Fuse 15A
2,Headlight Relay Fuse 10A
3,Brake Light/Horn Fuse 10A
4,Turn Signal Relay Fuse 10A
5,Electronic Steering Damper Fuse 10A

Fuse Box (2)
1,Fan Fuse 15A
2,Meter Fuse 10A
3,ETV Actuator Relay Fuse 10A
4,ABS Motor Relay Fuse 25A
5,ABS Solenoid Valve Relay Fuse 15A

Starter Relay
1,ECU Fuse 15A
2,Main Fuse 30A

LEFT SWITCH HOUSING CONNECTIONS

	Left Turn Signal Switch		Turn Signal Cancel Switch		Right Turn Signal Switch		Dimmer Switch		Passing Button		Horn Button		Hazard Switch		Upper Button		Lower Button	
Color	BK	G	BK	Y/R	BK	GY	BK	R/BK	BK	R/Y	BK	BR/BK	BK	O	BK	LG/R	BK	LG/BK
ON	●	●	●	●	●	●	●	●	●	●	●	●	●	●	●	●	●	●
OFF																		

IGNITION SWITCH CONNECTIONS

	Battery	Ignition	Signal
Color	BR	W	Y
OFF,Lock			
ON	●	●	●
HAZARD		●	●

Starter Lockout Switch

Color	G/W	R/G
Clutch Lever		
Pulled In	●	●

Front Brake Light Switch

Color	R/BL	BL
Brake Lever		
Pulled In	●	●

RIGHT SWITCH HOUSING CONNECTIONS

	Engine Start/Stop Switch				Mode Button	
	Engine Stop		Engine Start			
Color	R/G	GY	Y	BK/R	O/BK	BL
ON	●	●	●	●	●	●
OFF						

Color Code

BK	Black
BL	Blue
BR	Brown
G	Green
GY	Gray
LB	Light Blue
LG	Light Green
O	Orange
P	Pink
PU	Purple
R	Red
V	Violet
W	White
Y	Yellow

(98052-1281C,1288C)

Other than US, CAL and CA Models

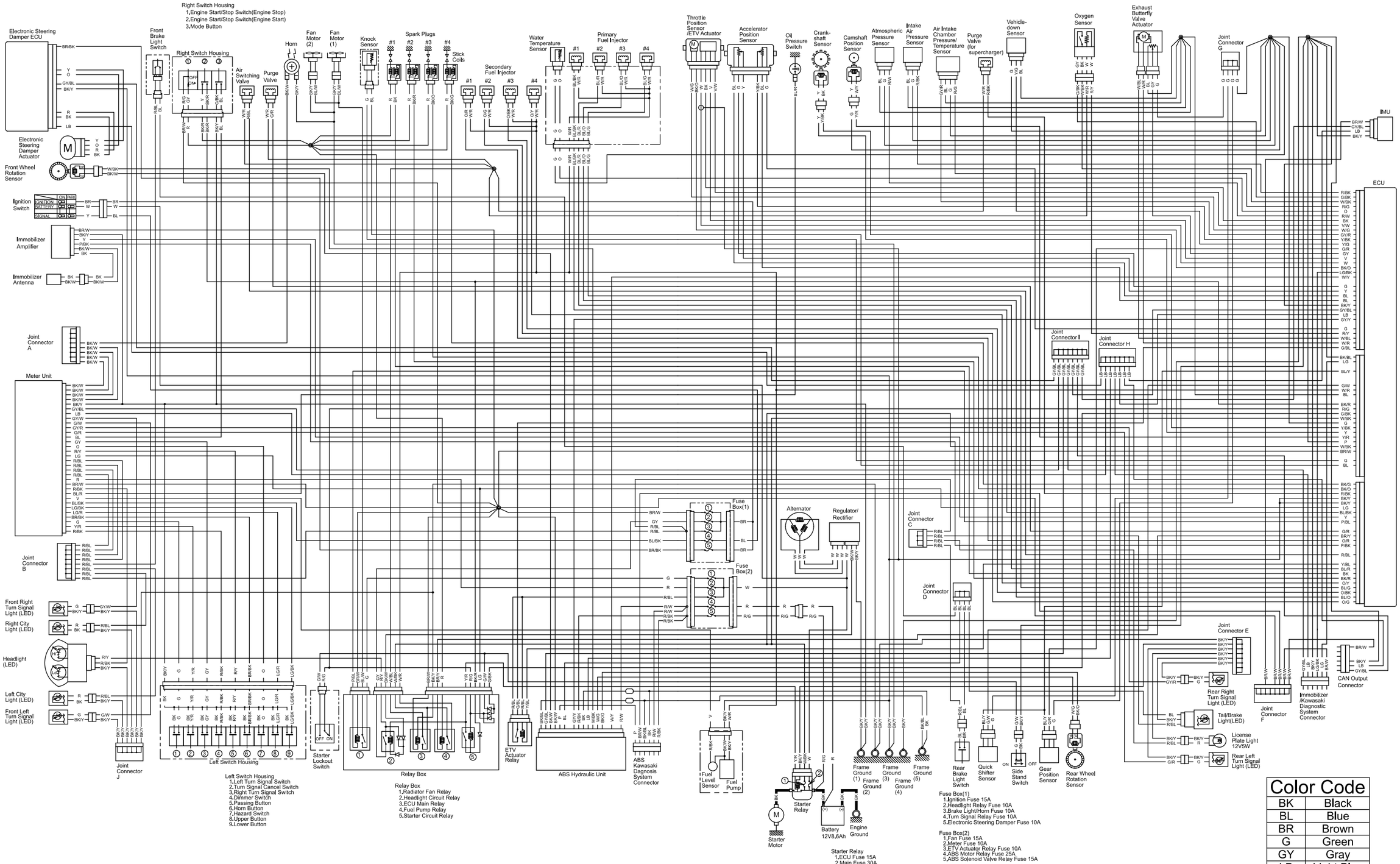

LEFT SWITCH HOUSING CONNECTIONS

	Left Turn Signal Switch		Turn Signal Cancel Switch		Right Turn Signal Switch		Dimmer Switch		Passing Button		Horn Button		Hazard Switch		Upper Button		Lower Button	
Color	BK	G	BK	Y/R	BK	GY	BK	R/BK	BK	R/Y	BK	BR/BK	BK	O	BK	LG/R	BK	LG/BK
ON	●	●	●	●	●	●	●	●	●	●	●	●	●	●	●	●	●	●
OFF																		

IGNITION SWITCH CONNECTIONS

	Battery	Ignition	Signal
Color	BR	W	Y
OFF,Lock			
ON	●	●	●
HAZARD		●	●

Starter Lockout Switch

Color	G/W	R/G
Clutch Lever		
Pulled In	●	●

Front Brake Light Switch

Color	R/BL	BL
Brake Lever		
Pulled In	●	●

RIGHT SWITCH HOUSING CONNECTIONS

	Engine Start/Stop Switch				Mode Button	
	Engine Stop		Engine Start			
Color	R/G	GY	Y	BK/R	O/BK	BL
ON	●	●	●	●	●	●
OFF						

Color Code

BK	Black
BL	Blue
BR	Brown
G	Green
GY	Gray
LB	Light Blue
LG	Light Green
O	Orange
P	Pink
PU	Purple
R	Red
V	Violet
W	White
Y	Yellow

(98052-1287C)

Part No.99924-1523-01

MODEL APPLICATION

Year	Model	Beginning Frame No.
2017	ZX1000XH	JKAZXCX1□HA000001 JKAZXT00XXA000001

□:This digit in the frame number changes from one machine to another.

Kawasaki Heavy Industries, Ltd. Motorcycle & Engine Company

Printed in Japan